Intelligent Drivesystems, Worldwide Services

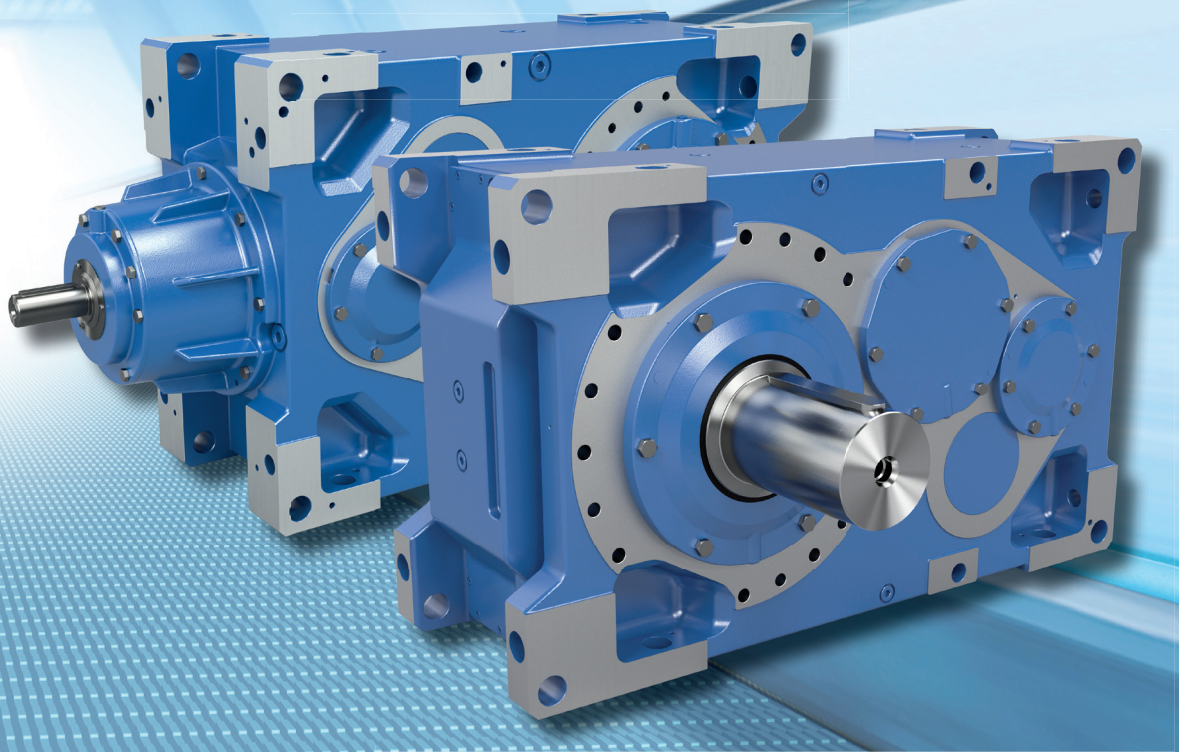

MAXXDRIVE™ Large Industrial Gear Units

Parallel-Axis and Right-Angle

High Precision, Long Life, Low Maintenance

EN

PRODUCT OVERVIEW

G1050 · 50/60 Hz · mm

SK 5207 - SK 15507 Gear Units

NORD DRIVESYSTEMS

NORD DRIVESYSTEMS

Spanning the globe
To serve you

Since 1965, NORD has become well established in the power transmission industry and grown to global proportions on the strength of productperformance, superior customer sevice and intelligent drive solutions. NORD is constantly improving and expandingits products to meet a never-ending variety of industrial challenges.

NORD designs and manufactures drive systems engineered for adaptability. NORD's innovative drive solutions are specifi ed and utilized for a range of applications in nearly every industry throughout the world.

NORD Drivesystems' product portfolio is extensive and continuously evolving in order to meet the needs of today's fast-changing markets. NORD's range of drive equipment includes: helical in-line, helical shaft-mount, helical-bevel, helical-worm and worm gear units with torques from 90 lb-in to 2,200,000 lb-in, readily available AC motors and from 1/6 HP to 250 HP, variable frequency drives up to 250 HP, and mechanical variable speed drives.

But NORD does far more than manufacture the world's fi nest drive components. We provide our customers with optimum drive confi gurations for their specifi c purposes, providing each and every one with truly complete and effi cient systems at a price/quality ratio unmatched in today's competitive markets.

NORD makes its wide product range easily available through a global network that includes representation in over 52 countries. By providing all of our customers with prompt delivery, and expert support services, we are fi rmly committed to exceeding customer expectations and being responsive to the ideas and specifi cations of every customer, anywhere in the world.

NORD DRIVESYSTEMS Group



HEADQUARTERS AND TECHNOLOGY CENTRE

- in Bargteheide, close to Hamburg

Mechanical Products	Elektrical Products	Electronic Products
Gear units	Motors	Inverters, motors starters and field distribution systems

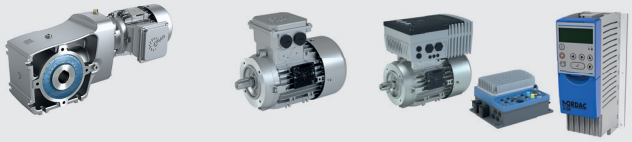

INNOVATIVE DRIVE SOLUTIONS

- for more than 100 branches of industrial



Gear unit production



Motor production



Inverter production

7 PRODUCTION LOCATIONS WITH CUTTING EDGE TECHNOLOGY

- produce gear units, motors and inverters also for complete drive solutions from a single source



The above map image is for information purpose and may not have been prepared or be suitable for legal purpose and we do not own any responsibility for correctness or authenticity of the same.

SUBSIDIARIES AND SALES PARTNERS IN 89 COUNTRIES ON 5 CONTINENTS

- provide local stocks
- assembly centres
- echnical support and
- customer service

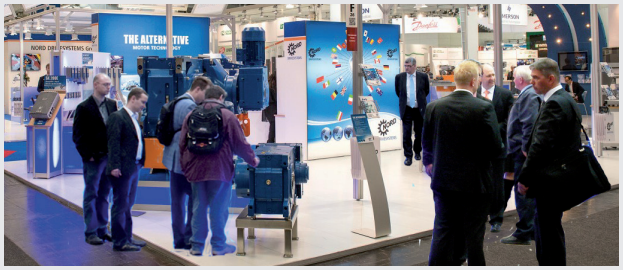

MORE THAN 3.600 EMPLOYEES THROUGHOUT THE WORLD

- create customised oriented solutions

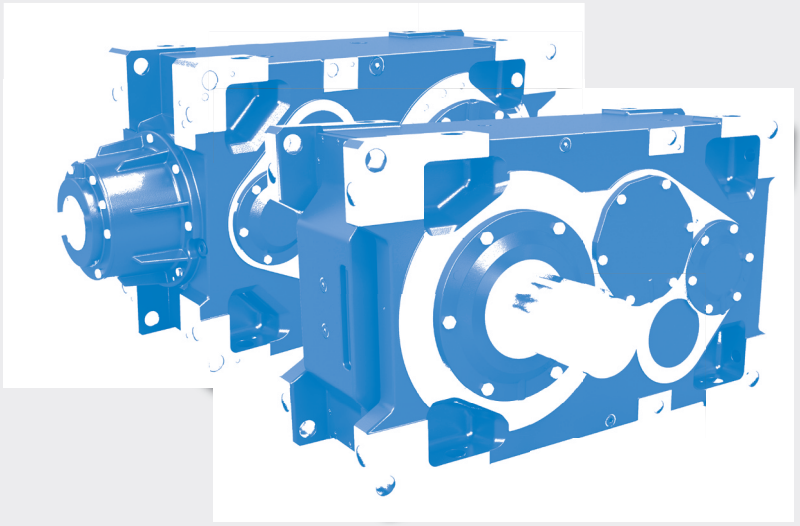

NORD Parallel & Right-Angle Large Industrial Gear Units

The NORD large industrial gear units offer a unique combination of flexibility and durability for the most demanding high-torque applications. Available in both a parallel-shaft design and right-angle design with a spiral-bevel input. Very high ratios are possible in the form of a compound unit by combining these units with NORD's Clincher™ or Helical-Bevel series.

Gearing and shafting are designed in accordance to international standards and the case carburized and hard finished gears are manufactured to the highest quality. Only industry recognized anti-friction roller bearings are used to provide exceptional bearing life. These units also offer flexible design alternatives by providing a full complement of input, mounting, output shaft, output shaft sealing, and thermal control options.

Optimized geometries and precise shaft alignment provide excellent load-bearing capacity, long operating life, insignificant operating noise as well as lubrication system integrity.

Features and Benefits

- Optimum sealing
- Quiet running
- High torque capacity
- Increased lubricant life
- High reliability
- Maximized operating life of bearings and gears
- Symmetrical design
- Flexible mounting
- Long operating life
- Mirror-image installation possible
- Fast configuration
- Standard B14 flange on output
- Same housing size & dimensions for 2 or 3-stage units
- Short delivery times

Content
Catalogue G1050 • 50/60 Hz

PRODUCTS AND CATALOGUES OVERVIEW

MAXXDRIVE™ KEY FEATURES

MAXXDRIVE™ Housings 6
Advantages of UNICASE™ Housings 6
FEM (Finite Element Modeling) Analysis 6
Gear, Bearing and Shaft Standards 6
Temperature Management 7
Lubrication Overview 7
Sealing systems 8
Design Advantages 8
Sound Pressure Levels 8

ENGINEERING

General Warnings & Cautions 10
Industrial Gear Unit Selection 13
Gear Unit Selection Procedures 17
Radial & Axial Load Information 28
Gear Unit Selection Factors 30
Service Factor Tables 32
Nomenclature Examples 36
Mounting Configuration 37
Rotation Direction 41
Available Coupling and Sealing Types 43
Lubrication 44
Oil & Drain Plug Locations 49
Oil Fill Quantities 50
Weights 52
Reducer Tolerance Information 56

OPTIONS

Option Overview List 58
Option Example Images 60
Shaft Options 64
Gear Unit Options 70
Thermal Options 80
Grain Endurance Package Option 86

PARALLEL RATINGS

Ratings Tables Overview 88
Nominal Power Ratings 90
Nominal Output Torques 94
Moment of Inertia Values 95
Exact Ratios 96
Thermal Ratings - M1/M3 Mounting - 1000 rpm @ 20° C 98
Thermal Ratings - M1/M3 Mounting - 1000 rpm @ 40° C 100
Thermal Ratings - M1/M3 Mounting - 1200 rpm @ 20° C 102
Thermal Ratings - M1/M3 Mounting - 1200 rpm @ 40° C 104
Thermal Ratings - M1/M3 Mounting - 1500 rpm @ 20° C 106
Thermal Ratings - M1/M3 Mounting - 1500 rpm @ 40° C 108
Thermal Ratings - M1/M3 Mounting - 1800 rpm @ 20° C 110
Thermal Ratings - M1/M3 Mounting - 1800 rpm @ 40° C 112
Thermal Ratings - M5 Mounting - 1000 rpm @ 20° C 114
Thermal Ratings - M5 Mounting - 1000 rpm @ 40° C 116
Thermal Ratings - M5 Mounting - 1200 rpm @ 20° C 118
Thermal Ratings - M5 Mounting - 1200 rpm @ 40° C 120
Thermal Ratings - M5 Mounting - 1500 rpm @ 20° C 122
Thermal Ratings - M5 Mounting - 1500 rpm @ 40° C 124
Thermal Ratings - M5 Mounting - 1800 rpm @ 20° C 126
Thermal Ratings - M5 Mounting - 1800 rpm @ 40° C 128

PARALLEL DIMENSIONS

Housing Dimensional Overview 132
Shaft Size Dimension Overview 133
SK 5207 / 5307 Dimensions 134
SK 6207 / 6307 Dimensions 136
SK 7207 / 7307 Dimensions 138
SK 8207 / 8307 Dimensions 140
SK 9207 / 9307 Dimensions 142
SK 10207 / 10307 Dimensions 144
SK 11207 / 11307 Dimensions 146
SK 12207 / 12307 Dimensions 148
SK 13207 / 13307 Dimensions 150
SK 14207 / 14307 Dimensions 152
SK 15207 / 15307 Dimensions 154
Optional Shaft Dimensions 156
Accessory Option Dimensions 159

RIGHT-ANGLE RATINGS

Ratings Tables Overview 176
Nominal Power Ratings 178
Nominal Output Torques 182
Moment of Inertia Values 183
Exact Ratios 184
Thermal Ratings - M1/M3 Mounting - 1000 rpm @ 20° C 186
Thermal Ratings - M1/M3 Mounting - 1000 rpm @ 40° C 188
Thermal Ratings - M1/M3 Mounting - 1200 rpm @ 20° C 190
Thermal Ratings - M1/M3 Mounting - 1200 rpm @ 40° C 192
Thermal Ratings - M1/M3 Mounting - 1500 rpm @ 20° C 194
Thermal Ratings - M1/M3 Mounting - 1500 rpm @ 40° C 196
Thermal Ratings - M1/M3 Mounting - 1800 rpm @ 20° C 198
Thermal Ratings - M1/M3 Mounting - 1800 rpm @ 40° C 200
Thermal Ratings - M5 Mounting - 1000 rpm @ 20° C 202
Thermal Ratings - M5 Mounting - 1000 rpm @ 40° C 204
Thermal Ratings - M5 Mounting - 1200 rpm @ 20° C 206
Thermal Ratings - M5 Mounting - 1200 rpm @ 40° C 208
Thermal Ratings - M5 Mounting - 1500 rpm @ 20° C 210
Thermal Ratings - M5 Mounting - 1500 rpm @ 40° C 212
Thermal Ratings - M5 Mounting - 1800 rpm @ 20° C 214
Thermal Ratings - M5 Mounting - 1800 rpm @ 40° C 216

RIGHT-ANGLE DIMENSIONS

Housing Dimensional Overview 220
Shaft Size Dimension Overview 221
SK 5407 / 5507 Dimensions 222
SK 6407 / 6507 Dimensions 224
SK 7407 / 7507 Dimensions 226
SK 8407 / 8507 Dimensions 228
SK 9407 / 9507 Dimensions 230
SK 10407 / 10507 Dimensions 232
SK 11407 / 11507 Dimensions 234
SK 12407 / 12507 Dimensions 236
SK 13407 / 13507 Dimensions 238
SK 14407 / 14507 Dimensions 240
SK 15407 / 15507 Dimensions 242
Optional Shaft Dimensions 244
Accessory Option Dimensions 247

SWINGBASE DIMENSIONS

SK ..407 / ..507 MSK Dimensions 264
SK ..407 / ..507 MSKB Dimensions 266
SK ..407 / ..507 MST Dimensions 268
SK ..407 / ..507 MSTB Dimensions 270
SK ..407 / ..507 MFK Dimensions 272
SK ..407 / ..507 MFKB Dimensions 274
SK ..407 / ..507 MFT Dimensions 276
SK ..407 / ..507 MFTB Dimensions 278

Products and Catalogues Overview

Industrial gear units (G1050)

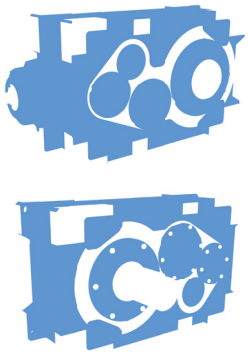

- All bearing points and sealing surfaces are machined in one operation
- No separating joints in the housing, no sealing surfaces subject to torque
- High-precision axis alignment, quiet running
- Long life, low maintenance
- Gear ratios from 5.54 bis 400:1 with the same foot dimensions
- Parallel & Right-Angled units

Sizes	11
kW	2.2 - 3.000
kNm	up to 250
i	5.6 - 30.000:1

NORDBLOC.1 Helical gear units (G1000)



- Foot or flange mounted
- Die-cast aluminium housing (5 sizes)
- UNICASE housing
- Dimensions compliant with industrial standards

Sizes	8
kW	0,12 – 37
Nm	55 – 3.300
i	2,10:1 – 456,77:1

Helical gear units (G1000)

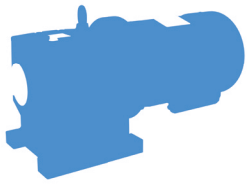

- Foot or flange mounted
- Long life, low maintenance
- Optimal sealing
- UNICASE housing

Sizes	11
kW	0,12 – 160
Nm	10 – 26.000
i	1,35:1 - 14.340,31:1

Parallel shaft gear units (G1000)



- Shaft, foot or flange mounted
- Hollow or solid shaft
- Compact design
- UNICASE housing

Sizes	15
kW	0,12 – 200
Nm	110 - 100 000
i	4,03:1 – 6.616,79:1

NORDBLOC.1 2-stage bevel gear units (G1014, G1000)

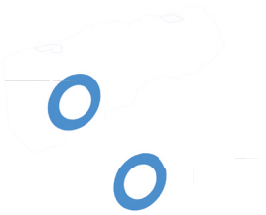

- Up to 97 % efficiency
- Shaft, foot or flange mounted
- Hollow or solid shaft
- UNICASE housing

Sizes	5
kW	0,12 – 9,2
Nm	50 – 660
i	3,58:1 - 70:1

Bevel gear units (G1000)

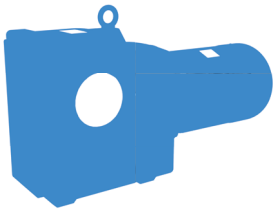

- Up to 95 % efficiency
- Shaft, foot or flange mounted
- Hollow or solid shaft
- UNICASE housing

Sizes	11
kW	0,12 – 200
Nm	180 – 50.000
i	8,04:1 – 13.432,68:1

Helical worm gear units (G1000)

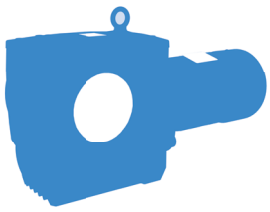

- Shaft, foot or flange mounted
- Hollow or solid shaft
- UNICASE housing

Sizes	6
kW	0,12 – 15
Nm	94 - 3058
i	4,40:1 – 7.095,12:1

UNIVERSAL SI worm gear units (G1035)



- Modular
- Universal mounting
- Lifetime lubrication
- IEC versions

Sizes	5
kW	0,12 – 4,0
Nm	21 – 427
i	5,00:1 – 3.000,00:1

SMI worm gear units (G1035)



- Smooth surfaces
- Lifetime lubrication
- IEC versions

Sizes	5
kW	0,12 – 4,0
Nm	21 – 427
i	5,00:1 – 3.000,00:1

Centralized frequency inverter SK 500E (F3050)



- Energy-safing function
- Integrated „Posicon“ positioning control
- Plug-in modules for control and communication (field bus)

Sizes	11
U [V]	1 ~ 115V 1 ~ 230V 3 ~ 230V 3 ~ 400V
P [kW]	0,25 - 160

Decentralized frequency inverter SK 200E (F3020)



- Energy-saving function
- Integrated „Posicon“ positioning control“

Sizes	4
U [V]	1 ~ 115V 1 ~ 230V 3 ~ 230V 3 ~ 400V
P [kW]	0,25 - 22

Decentralized frequency inverter SK 180E (F3018)



- Stand-alone-operation
- 4 parameter sets (can be switched online)
- Sensorless current vector control (ISD control)

Sizes	2
U [V]	1 ~ 115V 1 ~ 230V 3 ~ 230V 3 ~ 400V
P [kW]	0,25 - 2,2

Motor starter SK 135E (F3015)



- Integrated electronic brake rectifier
- Consistent parameter structure
- Reversing starter with soft start function

Sizes	2
U [V]	3 ~ 230V
	3 ~ 400V
P [kW]	0,12 – 4kW
	0,25 – 7,5kW

Motors (M7000)

1  Energy-saving	2  Switchable Pole
3  Single-Phase	4  Smooth Surface
5  Explosion Protection Gas-Environment	6  Explosion Protection Dust-Environment
7 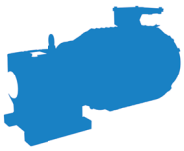 Ringfin or Ribbed Motors	

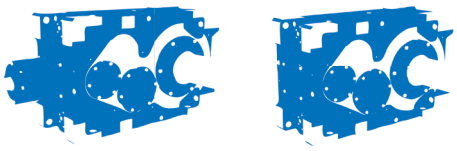

MAXXDRIVE™ Housings

NORD DRIVESYSTEMS large industrial gear units have been developed according to the well-proven UNICASE™ housing design in which all bearings and seals are contained within a single casting. The UNICASE™ concept was pioneered by NORD DRIVESYSTEMS Gear in 1980 and features the highest levels of precision, rigidity and strength by eliminating splits and bolt on carriers. There are no separations in the housing which are subjected to torques or radial loads.

The UNICASE™ principle enables a more compact design that includes larger roller bearings, which guarantee a prolonged operating life. Ease of service to the gear unit is ensured by a large assembly cover over the face plate of the gear unit.

Our UNICASE™ housings are made of cast iron. Ductile iron may be supplied upon request.

Optimized geometries and precise shaft alignment are a result of the UNICASE™ style housing and provide excellent load-bearing capacity, long operating life, insignificant noise levels as well as provide the highest level of system lubrication integrity.

Advantages of UNICASE™ Housings

- ☑ Optimum sealing
- ☑ Quiet running
- ☑ High torque capacity
- ☑ Increased operating life of bearings & gears
- ☑ High reliability
- ☑ Prolonged operating life
- ☑ Increased lubricant life
- ☑ Symmetrical design
- ☑ A B14 face flange on the output side
- ☑ Mounting pads on all 6 sides
- ☑ Mirror-image installation possible
- ☑ Same housing size, installation dimensions for all ratios (2 & 3 stage)

FEM (Finite Element Modeling) Analysis

The MAXXDRIVE™ design process included using state-of-the-art Finite Element Modeling as a key design tool. This allowed optimal structural design to maximize the strength & rigidity of the gearbox and it's components.

Gear, Bearing and Shaft Standards

All of the gears in the NORD MAXDRIVE™ product line are keyed to provide a positive connection. These gears are additionally mounted with a press-fit between the shaft and gear hub.

The gears included in our MAXXDRIVE™ line are made of high caliber alloy steels and are case hardened. The nominal torque ratings and speeds (calculated according to ISO 6336) are available in the ratings sections of this catalog.

All NORD DRIVESYSTEMS gear units provide the very highest level of quality, safety and reliability. The gearing, bearing and shaft capacities are calculated according to international standards.

The gears and bearings are designed to be partially submerged in oil during operation. Pressure circulation lubrication is available as an option in the form of a motor or a shaft driven pump. In addition to this option there are many other alternative oil circulation and cooling methods available for the MAXXDRIVE™ product line.

Temperature Management

Please refer to the options section on page ⇨🕮 57 for more information on the following available cooling system options:

Available Temperature Management Options

- ☑ Fan, 3 options
- ☑ External oil/air cooler
- ☑ External oil/water cooler
- ☑ Internal cooling coils (water)
- ☑ Heating cartridges

Lubrication Overview

Proper gearbox lubrication is essential in order to reduce friction, heat, and component wear. Lubricants reduce heat and wear by inserting a protective “fluid boundary” between mating parts and preventing direct metal to metal contact. Lubricants also help prevent corrosion and oxidation, minimize foam, improve heat transfer, optimize reducer efficiency, absorb shock loads and reduce noise.

MAXXDRIVE™ gear units that are mounted in a standard horizontal position are intended to be oil splash lubricated. MAXXDRIVE™ gear units mounted in a vertical or standing position utilize bath or immersion lubrication to ensure oil is delivered to the critical bearing and gear mesh areas. Forced lubrication or pressure lubrication is also an option.

In all cases, the option DRY requires pressure circulation lubrication for gear unit sizes SK 11.07 - SK 15.07 for lubrication of the upper bearings. In the small sizes SK 5.07 and SK 10.07 these bearings are lubricated with grease, which enables economical injection lubrication even in the M5 position with the DRY option.

The MAXXDRIVE™ gear units are designed to be able to operate with high performance mineral oil containing an extreme pressure (EP) additive. A viscosity grade ISO VG220 EP (AGMA 5 EP) mineral oil is typical for ambient temperature conditions between 0°C-40°C (32°F-104°F).

While the MAXXDRIVE™ gear units are designed to be able to operate with high performance mineral oil, NORD DRIVESYSTEMS strongly recommends the use of synthetic oil. Compared to mineral oil, synthetic oil offers the following advantages that provided added wear protection and extend reducer component life:

- Higher film strength, lower traction coefficient and improved lubricity.
- Reduced internal friction (by as much as ½ compared to mineral oil) resulting in lower operating temperatures and improved gear efficiency.
- Superior wear and thermo-oxidative resistance, provides enhanced system cleanliness and enables longer service intervals.
- Higher viscosity index offers improved low temperature and high temperature stability.

Additional lubrication guidlines can be found on page ⇨🕮 44 of this catalog as well as in the MAXXDRIVE™ maintenance instructions (www.NORD.com).

Durable and Flexible

The MAXXDRIVE™ large industrial speed reducers offer a unique combination of flexibility and durability. The drives are extremely versatile in terms of mounting configurations. They employ a “universal” housing design with mounting surfaces on all six sides. The same housing is used for both our off-set parallel and right-angle drives.

Explosion protection according to ATEX

NORD DRIVESYSTEMS gear units in modified design and certified according to equipment directive 214/34/EU are available on request for the categories 2 + 3.





Sealing systems

The standard shaft seals that are provided are nitrile rubber NBR (Buna-N), and optionally FKM (Fluroelastomers). For specific ambient conditions, sealing systems incorporating gamma-ring, labyrinth and Taconite seals are also available. In case other specialized sealing requirements are needed please contact NORD DRIVESYSTEMS Gear.

Available sealing options

- ☑ Single input seal NBR/FKM
- ☑ Double output seal NBR/FKM
- ☑ Gamma ring seal, dust protection
- ☑ Taconite seal (re-greasable labyrinth seal)
- ☑ Cartridge Seal
- ☑ Special sealing options by request

Design Advantages

There are countless advantages for using NORD MAXXDRIVE™ gear units for your large industrial gearbox needs. Here is an overview of some of the significant advantages that this product has to offer.

- ☑ Heavy duty design
- ☑ Competitive features/construction
- ☑ High power density
- ☑ Modular & Flexible Design
- ☑ Increased bearing life compared to split case housings (due to larger bearings)
- ☑ Quiet running - optimized bevel gears
- ☑ Large motor combinations possible
- ☑ One piece housing, which provides higher stiffness than split-case design
- ☑ Efficient fan cooling (optimized air flow over gearcase surfaces)
- ☑ Increased accessory life due to the use of synthetic lubricants
- ☑ Gears - case hardened and ground
- ☑ Antifriction - high quality bearings

Sound Pressure Levels

The surface sound pressure levels according to ISO 8579-1 of MAXXDRIVE gearboxes are below the 50% - line given in the standard.

DRIVESYSTEMS

Engineering

General Warnings & Cautions 10
Industrial Gear Unit Selection 13
Gear Unit Selection Procedures 17
Radial & Axial Load Information 28
Gear Unit Selection Factors 30
Service Factor Tables 32
Nomenclature Examples 36
Mounting Configuration 37
Rotation Direction 41
Available Coupling and Sealing Types 43
Lubrication 44
Oil & Drain Plug Locations 49
Oil Fill Quantities 50
Weights 52
Reducer Tolerance Information 56

Vertical Mounting Position

The thermal power limits for vertical output-shaft mounting position (M5 or M6) are shown in the respective ratings sections on pages ⇨🕮 98 - 129 for Parallel units and on pages ⇨🕮 186 - 217 for Right-Angle units.

Consult NORD DRIVESYSTEMS for determination of the thermal power limits if either the parallel shaft or bevel gear reducer is to be mounted in upright or standing mounting position (M2 or M4).

The mounting positions are displayed on page ⇨🕮 37 - 38.

⚠ *IMPORTANT NOTE* ⚠

In standing position or vertical-shaft applications a higher operating temperature rise may result due to the higher oil volumes which create greater oil churning losses. In many instances, NORD DRIVESYSTEMS may be able to recommend a forced oil lubrication system in order to avoid these higher operating temperature conditions.

Vertical Motor or Vertical Input Shaft

Parallel-shaft gear units with a motor or input shaft which is pointing vertical-up (M5 or M6 mounting position) require either a higher oil level to lubricate the high-end bearings and gearing or they will require a forced oil lubrication system.

Raising the oil level will result in increased oil churning or splashing losses and additional heating inside the gear unit. To avoid excessive pressure build-up, a critical loss in oil volume through the air vent or shaft seals and possible oil foaming, NORD DRIVESYSTEMS may need to recommend adding an oil tank (Option OT). For details on the OT options see page ⇨🕮 80.

Alternatively NORD may suggest maintaining a lower oil level and adding a forced lubrication. This will assure lubrication to the all the critical gear and bearing areas and also allow the gear unit to operate at lower oil sump temperatures. Consult NORD DRIVESYSTEMS for details.

Ventilation

All gear units include a breather for the differences in air pressure between the interior of the gear unit and it's environment.

Overload Conditions

Loads that exceed the gearbox ratings are considered overloads. An overload may either be momentary or periodic in duration, as well as quasi-steady or vibratory in nature. The load magnitude and the number of stress cycles need to be considered and analysis is required to prevent low-cycle fatigue or yield stress failure.

Refer the following load conditions to the factory:

- The peak momentary or starting load exceeds 200% percent of gear unit's rated capacity.
- Frequent load reversals that create high peak torques during the changes in load direction.
- Heavy repetitive shock loads may occur.
- When high-energy loads must be absorbed and high peak torques develop, such as when stalling conditions occur.
- More than 5 peak loads per hour

Oversized Prime Movers

High torque motors or oversized prime movers are sometimes needed to overcome high energy loads. Recommended operating service factors do not cover instances where oversized prime movers are required. Please contact NORD DRIVESYSTEMS in such cases.

Variable Speed or Multi-Speed Applications

Gear reducer ratings in this catalog are based upon single speed operation of the gear unit. When selecting gear drives for multi-speed or variable speed applications, determine the speed at which the greatest torque is developed and make the initial selection of the gear drive on that basis.

The following information is essential in order for NORD to verify adequate oil distribution, thermal capacity and whether or not there is any need for an oil distribution system or special cooling options:

- Indicate the operating speed requirements and gear ratio.
- Provide the minimum and maximum speeds are along with the speed duration cycles.

NORD Gear specifies different oil levels for various gear reducer sizes, speeds, ratios and mounting positions; If one intends to operate an existing gear drive at a different speed from those shown on the nameplate, the full application and nameplate information must be reviewed by NORD DRIVESYSTEMS.

Brake Equipped Applications

When a brake is either supplied between the motor and the gearbox or included with a motor, the gear drive must be selected by either the brake's rating or the highest equivalent input power, whichever is greater. If the brake rating is higher than 200% of the rated gear unit capacity or if the brake is located on the output shaft of the gear drive, the application must be reviewed by the NORD DRIVESYSTEMS.

Wet or Damp Outdoor Installation

Special seals and anti-corrosion measures are required for outdoor installation, in wet or damp environments or in tropical climates.

Exposure to Solar Heating

If a drive is exposed to radiant or solar heating, while operating in the sun at ambient temperatures of 104ºF (40ºC) or higher, then special protection measures are recommended. This protection can consist of a canopy over the gear drive. If neither is possible, a heat exchanger or other cooling device may be required.

Special Conditions

Consideration must be taken during unit selection when special environmental or extraordinary conditions are present during transportation, storage or operation. Please consult NORD for assistance.Special conditions may include (but are not limited to):

- Exposure to aggressive corrosive materials, contaminated air, gasses, acids, bases, salts, etc.
- Exposure to high relative humidity (installed outside, in damp rooms, or in tropical environments).
- Direct contact between the gear unit and liquid.
- Material build-up on the gear unit or motor (dirt, dust, sand, etc.).
- High atmospheric pressure.
- Radiation exposure.
- Extreme high or low temperatures or large temperature fluctuations.
- High vibration, rapid accelerations or decelerations, shock or impact.

Special Applications

Severe operating conditions are present in various applications. Often these operating conditions may involve one or more of the following:

- 24-hour continuous operation at or near full-load motor power or full-load torque.
- A large inertia or moving mass at the reducer out-put with a small gear ratio generating very high load conditions at the reducer's input.
- Vibrations may be common, such as those found when an external drive chain or belt is used.
- A direct gear drive connection to a mixer or fan shaft that produces high oscillating and bending movements as well as high load forces to the reducers drive shaft and internal bearings.
- Vertical reducer configuration is needed & specialreducer options are often necessary.
- Outdoor installation (i.e. humidity and aggressive media, as well as sudden changes in temperature with the possibility of condensation).
- A high degree of environmental protection is required(special sealing, biodegradable oil, special maintenance and servicing needs, low noise, etc.).

NORD has experience with many unique applications and has developed a package of design options in order to meet these requirements. Please consult NORD DRIVESYSTEMS when selecting a gear unit for special applications.

Storage

Gear units with the long-term storage option are completely filled with lubricant or have VCI corrosion protection agents added to the gear oil. Prior to installation, storage for up to 9 months is possible, so long as the following is observed:

- Store the gear unit in its actual mounting position in accordance with the specified oil fill-level, in a clean, dry and temperature controlled area.
- Avoid temperature fluctuations within the range of -5°C to 50°C (23°F to 122°F) and avoid relative humidity conditions in excess of 60%.
- Protect all exposed or unpainted shaft and flange surfaces with an anti-corrosion agent or grease.
- Store in a location free from shock & vibration, to avoid damage to the bearing elements & raceways.
- Whenever possible, rotate the shafts periodically, to help prevent brinelling of the bearings and to help keep the shaft seals pliable.
- Avoid exposure to the sun or UV light and other aggressive/corrosive materials (ozone gases, solvents, acids, caustic solutions, salts, radioactivity, etc.
- For storage longer than 9 months, Please contact NORD DRIVESYSTEMS to ensure proper protection.

Inquiry For

❒ Drive / Gear Unit Selection

❒ Drawing*) of of gear unit type _____

❍ PDF dim. sheet ❍ 2D DXF ❍ 3D STEP

❒ Other _____

Customer

Company _____

Contact Person _____

Phone _____

Mail _____

End User _____

Application Data

Industry / Industrial Sector[1)] _____

Application[1)] _____

Quantity _____ Country _____

Operation Time [hr/day]

❍ ≤ 0.5 hrs. ❍ 0.5 - 10 hrs. ❍ > 10 hrs.

Switch on Time [%]

For an observation period of 1 hour _____ %

Peak loads / start-ups [number / hr] _____ per hr.

Environmental Parameters

Place of installation

❒ small room (v ≥ 0.5 m/s) or (v ≥ 1.65 ft/s)

❒ large room or hall (v ≥ 1.5 m/s) or (v ≥ 4.95 ft/s)

❒ outdoors (v ≥ 4.0 m/s) or (v ≥ 13.1 ft/s)

❍ Shaded from sun

❍ Not shaded from sun

Ambient Conditions

❒ Clean (e.g. food industry)

❒ Dusty ❍ industrial dust

❍ fibrous dust (e.g. grain)

❍ cement, coal, stone quarry

ATTENTION: If dust is from cement, coal or stone, Taconite shaft seals are mandatory! ⚠

❒ Dry

❒ Wet ❍ fresh water

❍ salt water

❒ Corrosive (e.g. chemistry industry)

❒ Other _____

Ambient Temperature ❍ °C or ❍ °F

normal _____ min _____ max _____

Altitude above sea level [m] _____ **or [ft]** _____

Gearbox Load Data

Input Speed n1 [rpm]

normal _____ min _____ max _____

Output Speed n2 [rpm] or Ratio*)

n2: normal _____ min _____ max _____

i: target _____ min _____ max _____

Installed power at input P1 [❍ kW / ❍ HP] _____

Operating torque at output M2 [❍ kNm / ❍ lb-in]

normal _____ min _____ max _____

Operating factor [fbmin]

target _____ ❍ according to customer specification

❍ according to NORD reccomendation[1)]

with reference to ❍ motor power / motor torque

❍ operating power / operating torque

Direction of rotation and load direction at output

(solid shaft: with view towards shaft end)

(hollow shaft: with view from customer shaft)

❒ one direction

❍ CW

❍ CCW

with view on shaft position ❍ A2 ❍ B2

❍ pulsating load (e.g. crankshaft drive)

❒ both directions

❍ one load direction (e.g. hoist)

❍ both load directions

❍ both load directions, alternating load with less than one entire revolution at output





Gearbox Load Data (ctd.)

Machine Shaft Bearing

❒ two bearings, gear unit transmits only torque

❒ Other, please specify _____

Axial and Radial Forces

At input: FA = _____

FR = _____ x = _____ α = _____

At output: FA_1 = _____

FA_2 = _____

FR_1 = _____ x = _____ α = _____

FR_2 = _____ x = _____ α = _____

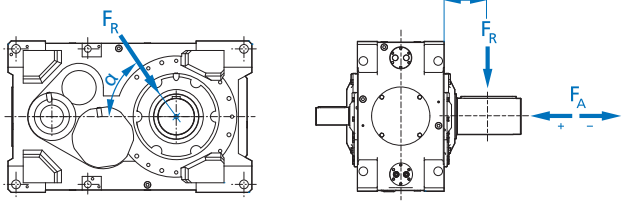

Requested bearing lifetime acc. to DIN 281 [h]

L10h _____ h (basic rating life) or

Lhna _____ h (modified rating life)

❒ on installed power ❒ on operating power

Basic Gearbox Parameters

Type

❒ helical (SK..207, SK..307) ❒ bevel (SK..407, SK..507)

Mounting Position *), 2)

❒ M1/M3 ❒ M5

❒ M2 ❒ M6

❒ M4

Shaft Positions*)

❒ A1 ❒ A2

❒ B1 ❒ B2

❒ C1

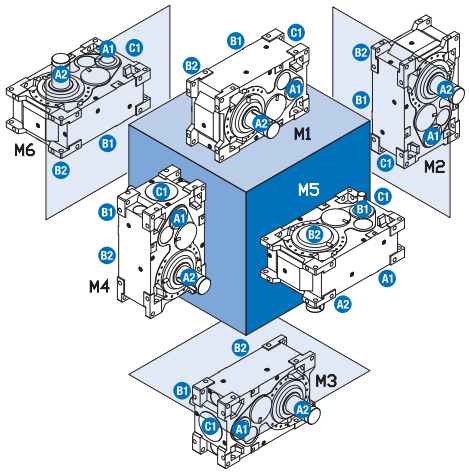

Basic Gearbox Parameters (ctd.)

Type of Output Shaft

❒ Solid shaft with keyway (V)

❒ Hollow shaft with keyway (A)

❍ with cover (H) ❍ without cover

❍ with fixing kit (B) ❍ without fixing kit

❒ Hollow shaft with Shrink Disc (AS)

❍ with cover (ASH) ❍ without cover (AS)

❒ Other _____

Drive Unit / Gear Unit Attachement to Application*)

❒ Foot

❒ Output Flange

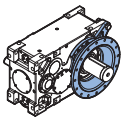

❍ block flange / B14 with thread (F)

❍ collared flange / B5 with through holes (FK)

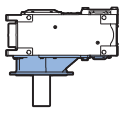

❍ Agitator version with increased bearing distance (VL2)

❍ Agitator version, with increased bearing distance, oil drip disc & leakage display (VL3)

❍ Agitator flange, with increased bearing distance, true drywell solution with forced lubrication & protective tube (VL4)

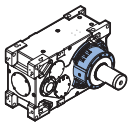

❍ Agitator with no flange increased bearing distance, true drywell solution with forced lubrication & protective tube (VL6)

❒ Torque Support

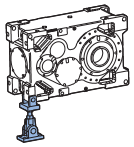

❍ Standard (D)

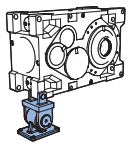

❍ Elastic (ED)

❒ Motor swing base[3] (MS..) with torque support

❒ Motor base frame[3] (MF..)

❒ Other _____

❒ Supplied by NORD ❒ Not supplied by NORD

Mandatory Gearbox Parameters

Air Breather

❒ NORD recommendation

❒ Metal filter (standard) ❒ Cellulose filter

❒ Desiccant breather ❒ Pressure vent plug

Oil Level Control

❒ Screw plug (standard) ❒ Oil level sight glass

❒ Oil dip stick ❒ Oil level indicator

Oil Drain

❒ Screw plug (standard) ❒ Oil drain cock

Requested Shaft Seal

❒ NORD recommendation

❒ Sealing rigns (standard) ❒ Taconite

ATTENTION: If dust is from cement, coal or stone, Taconite shaft seals are mandatory! ⚠

Painting Specification

❒ NORD recommendation

❒ F2.0 (standard) ❒ Other _____

Color of Top Coat

❒ RAL 5010 ❒ RAL 7031 ❒ Other _____

Optional Gearbox Parameters*)

Backstop

❒ Backstop (R) at shaft position ❍A1 ❍B1

Auxilliary Drive

❒ Auxilliary drive (WX) at shaft position ❍A1 ❍B1

Type (If known) _____

Pre-Stage Gear Unit

❒ Pre-stage gear unit (WG) at shaft position ❍C1 ❍A1 ❍B1

Type (If known) _____

Brake (holding brake only)

❒ Drum brake ❒ Disc Brake

Brake torque _____

At shaft position ❍C1 ❍A1 ❍B1 ❍A2 ❍B2

Monitoring Sensors

❒ Pt100 in oil sump

❒ Pt100 for bearings

❒ Other, please specify _____

Vibration Sensors

❒ SPM nipples / vibration

Couplings *)

Coupling at Input Shaft

❒ Torsionally flexible (e.g. jaw coupling KTR Rotex)

❒ Hydraulic (e.g. Transfluid KRG)

❒ Other _____

❒ Supplied by NORD ❒ Not supplied by NORD

Coupling at Output Shaft

❒ Torsionally flexible (e.g. pin & bush KTR Revolvex KX-D)

❒ Torsionally rigid (e.g. gear coupling KTR GEARex)

❒ Other _____

❒ Supplied by NORD ❒ Not supplied by NORD

Lubrication*)

Lubrication System

❒ NORD recommendation

❒ Splash lubrication (standard)

❒ Forced / pressure lubrication

❍ LC (upper bearings) ❍ LCX (bearings + gears)

❍ With motor pump

❒ 1-phase

❒ 3-phase

Voltage _____

❍ With flange pump at shaft position ❒ 1 ❒ 2

❒ Full oil level with oil tank

Type of Oil / Gear Unit to Operate With

❒ NORD recommendation

❒ Mineral CLP oil (standard)

❒ Synthetic CLP PG oil

❒ Synthetic CLP HC (PAO) oil

❒ Viscosity class ISO VG

❍ 220 (standard) ❍ 320 ❍ _____

(Gear unit will usually be delivered without oil)

Oil Heater

❒ Screw plug immersion heater (OH)

❍ 1-phase ❍ 3-phase

❍ voltage _____

Engineering





Motor / Drive Type

Drive Type

❒ 3-phase motor

❒ Other _____

Frequency Inverter Operation

❒ Yes ❒ No

❒ 50Hz characteristic ❒ 87 Hz characteristic

❒ Other _____

(Please specify rotation speed rage min/max under Gearbox Load Data, input speed.)

Motor

❒ IEC ❒ NEMA size: _____

❒ Supplied by NORD ❒ Not supplied by NORD

(If delivered by NORD, please specify exact motor type & options)

Motor Mount

❒ IEC/NEMA motor adapter

❒ B3 (foot) ❒ B5 (flange)

❒ Other _____

Cooling*)

Permissable Cooling

	Approved	Not Approved
Fan	❒	❒
At shaft position	❍0 ❍1	❍2
Cooling Coil (CC)	❒	❒
External oil/air cooler (CS2)	❒	❒
External oil/water cooler (CS1)	❒	❒

Type of cooling water

❍ Sea water

❍ Pond water

❍ Other _____

Cooling water temperature _____ °C

Explosion Protection

Explosion protection required ❒ Yes ❒ No

❒ ATEX zone/category _____

temperature class/max service temp. _____

❒ Other _____

*) data necessary for drawing request

1) see G1050 ⇨🕮 32 - 35

2) see G1050 ⇨🕮 37 - 38

3) see G1050 ⇨🕮 75

Further Information

Sketch

Gear Unit Selection Procedure

Selecting a MAXXDRIVE™ gear unit requires three fundamental steps.

1. Pre-selection

A variety of options or methods are provided to aid in the pre-selection.

1.1 Input Power Method (⇨🕮 18).
1.2 Output Torque Method (⇨🕮 20).
1.3 Variable Output Torque Method (⇨🕮 22).

Standard Selection Criteria

The standard or default selection criteria are defined as follows:

- Ambient temperature: 20°C (68 °F) or 40°C (104°F)
- Ambient air condition: large open area with good air circulation and convection cooling; sustained ambient air velocity approaching $V_L \approx 4.92$ ft/s (1.5 m/s).
- Installation foundation: flat and level steel sub-construction.
- Installation altitude: ≤ 3280 ft (1000 m) above sea level.
- Mounting position: horizontal (⇨🕮 37 - 38).
  - M1 is standard for 2-stage Parallel and 3-stage Right-Angle gear units.
  - M3 is standard for 3-stage Parallel and 4-stage Right-Angle gear units.
- Lubrication method: oil-splash lubrication.

2. Check of peak load conditions (⇨🕮 23).

3. Check of the thermal power capacity ⇨🕮 25).

Our selection procedure accounts for variations in ambient temperature and air conditions, installation altitude, mounting position, lubrication method, and thermal power capacities.

⚠ **WARNING** ⚠
To assure proper reducer lubrication and cooling during operation, consult NORD when operating input speed requirements exceed 1800 rpm or are below 1000 rpm.



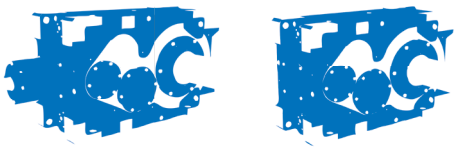

1.1 Pre-selection: Input Power Method

The selection of the gear reducer is based upon the known Input Power (P_1).

1. **Determine if the nominal input speed (n_{1N}) will be 1000, 1200, 1500 or 1800 rpm.**

⚠ **IMPORTANT NOTE** ⚠
The reducer power ratings tables are based upon typical input speeds of 1000, 1200, 1500 & 1800 rpm. For other input speeds between 1000-1800 you may make a selection based on the (1.2) Output Torque Method found on page ⇨🕮 20.

2. **Record the required output speed (n_2) or required ratio (i_{req}) of the gear reducer. Calculate (i_{req}) if (n_2) is known, or calculate (n_2) if (i_{req}) is known.**

$$i_{req} = \frac{n_{1N}}{n_{2N}} \text{ or ... } n_2 = \frac{n_{1N}}{i_{req}}$$

3. **Record the required input power (P_1). The required input power (P_1) may also be calculated as follows, if one knows the required output speed (n_2) and required reducer output torque (M_2).**

$$P_1 = \frac{M_2 \times n_{2N}}{63025 \times \eta_N} \text{ (for hp) or } P_1 = \frac{M_2 \times n_{2N}}{9.55 \times \eta_N} \text{ (for kW) where...}$$

η_N =nominal gear reducer efficiency (⇨🕮 30)

4. **Determine the Operating Service Factor (f_B) from the table on pages ⇨🕮 32 - 35.**

⚠ **WARNING** ⚠
Consult NORD if uncertain about what operating service factor (f_B) is required and in cases where a lower service factor than shown in the table on page ⇨🕮 32 is desired.

5. **Determine the Input Factor (f_M) from, page ⇨🕮 30. This factor will help account for possible torque fluctuations from the type of prime mover.**
6. **Calculate the required rated power (P_N) for the gear reducer as follows:**

$$P_N = P_1 \cdot f_B \cdot f_M$$

7. **Utilize the ratings tables to select a gear unit and gear ratio, in accordance to the input power (P_1) and the required gear ratio (i_{req}) or output speed (n_{2N}).**

Parallel shaft gear units ⇨🕮 87 – 130
Right-angle gear units ⇨🕮175 – 218

(1.1) Pre-selection - Example Equation:

When the following information is given:

P_1 = 373 kW (known input power)
n_{1N} = 1800 rpm (input speed; step 1)
n_2 = 80 rpm (required output speed)

Calculated:

$$i_{req} = \frac{n_{1N}}{n_2} = \frac{1800}{80} = 22.5 \text{ (required ratio)}$$

Pre-selection Example Application:

Mixer; homogenous materials - Duty Cycle = 5-10 hours daily (⇨🕮 32)

Service factors - f_B			
Application	Load Duration		
	up to 5 hrs per day	5-10 hrs per day	over 10 hrs per day
MIXERS			
for homogeneous material	1,35	1,35	1,40

f_B = 1.35 (service factor)

Input Factor (takes into account the prime mover) (⇨🕮 30)

f_M	Type of Prime Mover
	Electric motors Hydro motors Turbines
	1

Calculated:

$P_N = P_1 \cdot f_B \cdot f_M$ or $P_N = 373 \cdot 1.35 \cdot 1.0$

Therefore P_N = 503.5 kW

Use this number and the required ratio calculation to look at the Ratings section in order to decide on the proper sized gear unit.

In this case a 22.5 ratio with 503.5 kW with an input speed of 1800 rpm and an 80 rpm output speed would lead you to choose a 11307 (found on page ⇨🕮 91) based on comparing our calculations and the highlighted numbers from the example below.

Nom. Ratio	Nominal Input Speed	Nominal Output Speed	SK 5207/ SK 5307	SK 6207/ SK 6307	SK 7207/ SK 7307	SK 8207/ SK 8307	SK 9207/ SK 9307	SK 10207/ SK 10307	SK 11207/ SK 11307	SK 12207/ SK 12307	SK 13207/ SK 13307	SK 14207/ SK 14307	SK 15207/ SK 15307
			Rated Power										
i_N	n_{1N} [rpm]	n_{2N} [rpm]	P_N [kW]	P_N [kW]	P_N [kW]	P_N [kW]	P_N [kW]	P_N [kW]	P_N [kW]	P_N [kW]	P_N [kW]	P_N [kW]	P_N [kW]
22,4	1000	36	69	97	110	140	180	217	345	515	722	878	1.295
	1500	54	103	145	166	210	269	325	517	772	1.083	1.317	1.942
	1200	48	83	116	132	168	216	260	414	618	866	1.054	1.554
	1800	64	124	174	199	252	323	390	621	927	1.299	1.581	2.331

1.2 Pre-selection: Output Torque Method

The selection of the gear reducer is based upon the required Reducer Output Torque (M_2).

1. Determine the nominal input speed (n_{1N}).

⚠ **IMPORTANT NOTE** ⚠
The reducer ratings tables are based upon input speeds of 1000, 1200, 1500 & 1800 rpm.

2. Record the required output speed (n_2) or required ratio (i_{req}) of the gear reducer. Calculate (i_{req}) if (n_2) is known, or calculate (n_2) if (i_{req}) is known.

$$i_{req} = \frac{n_{1N}}{n_{2N}} \text{ or ... } n_{2N} = \frac{n_{1N}}{i_{req}}$$

3. Record the required reducer output torque (M_2). The required reducer output torque (M_2) may also be calculated as follows, if one knows the required output speed (n_{2N}) and required input power (P_1).

$$M_2 = \frac{P_1 \times 63025 \times \eta_N}{n_{2N}} \text{ (for hp) or } M_2 = \frac{P_1 \times 9.55 \times \eta_N}{n_{2N}} \text{ (for kW) where...}$$

η_N =nominal gear reducer efficiency (⇨🕮 30)

4. Determine the Operating Service Factor (f_B) from the table on pages ⇨🕮 32 - 35.

⚠ **WARNING** ⚠
Consult NORD if uncertain about what operating service factor (f_B) is required and in cases where a lower service factor than shown in the table on page ⇨🕮 32 is desired.

5. Determine the Input Factor (f_M) from, page ⇨🕮 30. This factor will help account for possible torque fluctuations from the type of prime mover.

6. Calculate the required Rated Torque (M_{2max}) for the gear reducer as follows:

$$M_{2MAX} = M_2 \cdot f_B \cdot f_M$$

7. Utilize the ratings tables to select a gear unit and gear ratio, in accordance to the reducer output torque (M_2) and the required gear ratio (i_{req}) or output speed (n_2).

Parallel shaft gear units ⇨🕮 87 – 130
Right-angle gear units ⇨🕮 175 – 218

(1.2) Pre-selection - Example Equation:

When the following information is given:

M_2 = 45.19 kNm (required output torque)
n_{1N} = 1800 rpm (input speed; step 1)
n_2 = 80 rpm (required output speed)

Calculated:

$$i_{req} = \frac{n_{1N}}{n_2} = \frac{1800}{80} = 22.5 \text{ (required ratio)}$$

Pre-selection Example Application:

Mixer; homogenous materials - Duty Cycle = 5-10 hours daily (⇨🕮 32)

Service factors - f_B			
Application	Load Duration		
	up to 5 hrs per day	5-10 hrs per day	over 10 hrs per day
MIXERS			
for homogeneous material	–	1.35	1.40

f_B = 1.35 (service factor)

Input Factor (takes into account the prime mover (⇨🕮 30)

f_M	Type of Prime Mover
	Electric motors Hydro motors Turbines
	1

f_M = electric motor = 1.0 (input factor)

Calculated:

$M_{2max} = M_2 \cdot f_B \cdot f_M$ or $M_{2max} = 45.19 \text{ kNm} \cdot 1.35 \cdot 1.0$

Therefore M_{2max} = 61.01 kNm

Use this number and the required ratio calculation to look at the Ratings section in order to decide on the proper sized gear unit.

In this case a 22.5 ratio with a 61.01 kN-m torque requirement would lead you to select an 11307 (found on page ⇨🕮 94) which is based on comparing our calculations to the highlighted numbers from the example below.

Nom. Ratio	SK 5207/ SK 5307	SK 6207/ SK 6307	SK 7207/ SK 7307	SK 8207/ SK 8307	SK 9207/ SK 9307	SK 10207/ SK 10307	SK 11207/ SK 11307	SK 12207/ SK 12307	SK 13207/ SK 13307	SK 14207/ SK 14307	SK 15207/ SK 15307
	Output Torque										
i_N	M_{2max} [kNm]	M_{2max} [kNm]	M_{2max} [kNm]	M_{2max} [kNm]	M_{2max} [kNm]	M_{2max} [kNm]	M_{2max} [kNm]	M_{2max} [kNm]	M_{2max} [kNm]	M_{2max} [kNm]	M_{2max} [kNm]
20	15	20	24	29	40	46	73	108	150	190	255
22,4	15	20	24	29	40	46	74	109	151	190	270
25	15	20	24	29	40	47	76	109	151	190	273
28	15	20	24	29	41	47	76	110	151	190	276

SK ..207 Units **SK ..307 Units**

1.3 Pre-selection: Variable Output Torque Method

In many gear reducer applications, the required reducer output torque varies from one time interval to the next, over the typical operational duty cycle. In these situations variable torque loads, at constant speed operation, can be converted to an average torque in order to make a selection.

1. **Determine if the nominal input speed (n_{1N}) will be 1000, 1200, 1500 or 1800 rpm.**
2. **Record the Required Output Speed (n_{2N}) or Required Ratio (i_{req}) of the gear reducer.**
3. **Calculate i_{req} if n_{2N} is known, or calculate n_{2N} if i_{req} is known.**

$$i_{req} = \frac{n_{1N}}{n_{2N}} \text{ or ... } n_{2N} = \frac{n_{1N}}{i_{req}}$$

4. **Calculate the Average Reducer Output Torque (M_{2avg}) as follows:**

$$M_{2avg} = 6.6\sqrt{\left((T_{2.1})^{6.6} \cdot \frac{t_1}{t_t}\right) + \left((T_{2.2})^{6.6} \cdot \frac{t_2}{t_t}\right) + ... + \left((T_{2.n})^{6.6} \cdot \frac{t_n}{t_t}\right)}$$

where:

M_{2avg}	=	Average reducer output torque
$T_{2.1}$ ... $T_{2.n}$	=	Required reducer output torque at a specific time interval
t_1 ... t_n	=	Specific time interval
t_t	=	Total duty cycle time, representing all torque and time intervals

5. **Determine the Operating Service Factor (f_B) from the table on pages ⇨🕮 32 - 35.**
6. **Determine the Input Factor (f_M) from, page ⇨🕮 30. This factor will help account for possible torque fluctuations from the type of prime mover.**
7. **Calculate the required rated torque (M_{2max}) for the gear reducer as follows:**

$$M_{2max} = M_{2avg} \cdot f_B \cdot f_M$$

8. **Use the ratings tables to select a gear unit and gear ratio, in accordance to the average reducer output torque (M_{2avg}) and the required gear ratio (i_{req}) or output speed (n_{2N}) requirements.**

Parallel shaft gear units ⇨🕮 87 – 130
Right-angle gear units ⇨🕮 175 – 218

9. **Using the formula shown, calculate the average input power (P_{1avg}).**
where:

$$P_{1avg} \geq \frac{M_{2avg} \times n_{1N}}{9{,}55 \times i_N \times \eta_N} \text{ (kW) or } P_{1avg} \geq \frac{M_{2avg} \times n_{1N}}{63025 \times i_N \times \eta_N} \text{ (hp)}$$

P_{1avg}	=	Average required input power for a specific time interval.
M_{2avg}	=	Average required reducer output torque
n_{1N}	=	Nominal (motor) input speed
η_N	=	Nominal gear reducer efficiency (⇨🕮 30)

10. **Using the formula shown, calculate the Required Input Power ($P_{1.N}$) for each portion of the duty cycle. Then determine the maximum ($P_{1.N}$) value.**

$$P_{1.N} \geq \frac{M_{2.N} \times n_{1N}}{63025 \times i_N \times \eta_N} \text{ (hp) or } P_{1.N} \geq \frac{M_{2.N} \times n_{1N}}{9.55 \times i_N \times \eta_N} \text{ (kW)}$$

where:

M_{2avg}	=	Average reducer output torque
$M_{2.1}$ ... $M_{2.n}$	=	Required reducer output torque at a specific time interval.
t_1 ... t_n	=	Specific time interval.
t_{ges}	=	Total duty cycle time, representing all torque and time intervals

11. **Select a motor power (P_1) that is suited to deliver both the average required power (P_{1avg}), calculated in Step 9, and the maximum required power ($P_{1.N}$), determined in Step 10.**

IMPORTANT NOTE

Utilizing the motor's overload capacity may not be necessary to select the motor power based upon the maximum power required for the duty cycle. Consult your motor supplier and/or NORD DRIVESYSTEMS if help is needed.

IMPORTANT NOTE

When trying to determine the motor power, it is common practice to round the calculated power to the next available standard motor power.

12. Using the selected motor power (P_1) from Step 11, verify that the Rated Torque (M_{2max}) of the selected gear reducer is larger than the value calculated below.

$$M_{2max} \geq \frac{P_1 \cdot i_{ges} \cdot 63205}{n_1} \cdot \eta_N \cdot f_B \cdot f_m \text{ (lb-in)} \quad \text{or} \quad M_{2max} \geq \frac{P_1 \cdot i_{ges} \cdot 9.55}{n_1} \cdot \eta_N \cdot f_B \cdot f_m \text{ (kNm)}$$

where:
P_1 = Motor power determined in step 11
i_{ges} = Exact gear ratio for the gear unit selected in step 11
n_{1N} = Nominal (motor) input speed
η_N = Nominal gear reducer efficiency (⇨ 30)

2. Check of peak load conditions

After the basic pre-selection of the MAXXDRIVE™ gear reducer, the peak load conditions must be determined at the reducer output, and compared to the reducer rated torque, in order to verify that the gear unit has a sufficient mechanical rating or capacity.

The peak load torque is the highest possible torque that may occur in the application. When the equipment builder or machine designer has determined the peak operating loads, these conditions should be considered during the selection verification process. Otherwise peak load torques estimates need to be made.

Methods for Caclulating Gear Reducer Torque

Method 1 : Peak load at the output is known.

If the machine designer or equipment builder knows the peak load developed at the reducer output, the reducer selection can be verified by applying the following formula.

$$M_{2max} \geq M_{2peak} \cdot f_S$$

where:
M_{2max} = Gear reducer rated torque
M_{2peak} = Peak load torque at the reducer output
f_s = Peak load factor (⇨ 30)

Method 2 : Peak load at the input is known.

If the machine designer or equipment builder knows the peak load developed at the reducer input, the reducer selection can be verified by applying the following formula.

$$M_{2max} \geq M_{1peak} \cdot i_{ges} \cdot f_S$$

where:
M_{2max} = Gear reducer rated torque
M_{1peak} = Peak load torque at the reducer input
i_{ges} = Exact gear ratio for the selected gear unit
f_s = Peak load factor (⇨ 30)

IMPORTANT NOTE

When brakes are supplied between the motor and the gear reducer, or when brake motors are utilized, the peak torque developed by the braking action must also be considered.

2. Check of peak load conditions (ctd.)

Method 3 : Estimating peak load torque at the output

Often, the peak load torque at the reducer output is not known. When this is the case and estimate of the peak load torque can be made from the known input shaft loads and by taking into consideration the Start-Up Factor (f_{AN}).

$$M_{2max} \geq \frac{P_1 \cdot i_{ges} \cdot 63205}{n_1} \cdot \eta_N \cdot f_{AN} \cdot f_s \text{ (lb-in)} \quad \text{or} \quad M_{2max} \geq \frac{P_1 \cdot i_{ges} \cdot 9.55}{n_1} \cdot \eta_N \cdot f_{AN} \cdot f_s \text{ (kNm)}$$

where:
M_{2max} = gear reducer rated torque
P_1 = Motor power determined in step 1.3, point 1- 11 (⇨🕮 22)
i_{ges} = exact gear ratio for the gear unit selected in step 1.3, point 1-11 (⇨🕮 22)
n_1 = input speed to the gear unit
η_N = nominal gear reducer efficiency (⇨🕮 30)
f_{AN} = start -up factor (⇨🕮 30)
f_S = peak load factor (⇨🕮 30)

(2.) Check of Peak Load - Example Equation:

We must make sure the gearbox is able to handle the load that will be applied when in operation.

When the following information is given:

Reversing Application with
M_{2peak} = 45.19 kN-m (peak load at reducer output)
f_S = 10x per hour (peak load frequency on page ⇨🕮 30)

f_S	Direction of load	Load peaks per hour 6 - 20
	one-directional	0.63
	reversible	0.87

Calculated:

$M_{2max} \geq M_{2peak} \cdot f_S$ or... 74 kN-m ≥ 45.19 kN-m · 0.87 or... 74 kN-m ≥ 39.31 kN-m = ☑

This drive selection is acceptable based on the equation outcome

Nom. Ratio	SK 5207/ SK 5307	SK 6207/ SK 6307	SK 7207/ SK 7307	SK 8207/ SK 8307	SK 9207/ SK 9307	SK 10207/ SK 10307	SK 11207/ SK 11307	SK 12207/ SK 12307	SK 13207/ SK 13307	SK 14207/ SK 14307	SK 15207/ SK 15307
	Output Torque										
i_N	M_{2max} [kNm]	M_{2max} [kNm]	M_{2max} [kNm]	M_{2max} [kNm]	M_{2max} [kNm]	M_{2max} [kNm]	M_{2max} [kNm]	M_{2max} [kNm]	M_{2max} [kNm]	M_{2max} [kNm]	M_{2max} [kNm]
20	15	20	24	29	40	46	73	108	150	190	255
22,4	15	20	24	29	40	46	74	109	151	190	270
25	15	20	24	29	40	47	76	109	151	190	273
28	15	20	24	29	41	47	76	110	151	190	276

SK ..207 Units SK ..307 Units

Max Torque (M_{2max}) From Step 1.2 = 74 kNm

3. Check of Thermal Power Capacity

Before finalizing the gear reducer selection, one must check to make certain the reducer's thermal power capacity (P_{wg}) exceeds the input power (P_1) or motor power (P_M) being delivered to the gear unit.

$P_{wg} > P_1$ and $P_{wg} > P_M$

WARNING

If the gear drive's thermal power capacity is limited there will not be sufficient thermal energy dispersion and the gear unit can overheat causing significant damage.

The thermal power capacity of the gear reducer is influenced by a variety of factors. These additional factors must be considered in making the final gear reducer selection:

- Ambient temperature
- Heat transfer to/from adjoining surfaces
- Mechanical loading of the gear unit
- Size and type of gear unit
- Ratio
- Input speed
- Type of lubrication used
- Oil fill level
- Operation duty cycle
- If there is an additional oil circulating system
- If an oil cooling system is utilized
- Ambient conditions and altitude

When to Consult NORD DRIVESYSTEMS

Consult NORD DRIVESYSTEMS for a detailed application review if two or more of the following conditions apply:

- Upright mounting position (M2, M4).
- Input power P_1 > 670 hp (500 kW)
- Input speeds n_1 > 1800 rpm or n_1 < 1000 rpm
- Increased ambient temperature > 104°F (40°C)
- In ATEX environments

Consult NORD DRIVESYSTEMS for recommendations if there are special installation conditions that may affect the operating temperature of the unit. Examples include, but are not limited to, the following:

- Installation in an area with limited air flow
- Exposure to high ambient conditions or heat radiation
- Exposure to solar heating

WARNING

For installation outdoors, adequate shading from the sun must be provided.

Standard Installation & Operating Conditions

The thermal power rating of the gear unit is always defined at standard installation and operating conditions as follows.

- Ambient temperature: 20°C (68 °F), 40°C (104 °F)
- Ambient air condition: large open area with good air circulation and convection cooling; sustained ambient air velocity approaching $V_L \approx 4.9$ ft/s (1.5 m/s)
- Installation foundation: flat and level steel sub-construction
- Installation altitude: ≤ 3280 ft (1000 m) above sea level
- Mounting position: horizontal (⇨📖 37 - 38)
  - M1 is standard for 2-stage Parallel and 3-stage Right-Angle gear units
  - M3 is standard for 3-stage Parallel and 4-stage Right-Angle gear units
- Lubrication method: oil-splash lubrication
- If water cooled, cooling water inlet temperature: 20°C (68 °F)
- Synthetic oil PAO ISO VG 220

Cooling Selection Methods

Cooling system options are recommend as shown in the selection table under the column labeled “CS”.

Column “CS”	Recommended Cooling System Option
–	Indicates that no additional measures are required so long as standard installation and operating conditions are applicable.
Fan	Fan cooling with shaft-driven fan.
CC	Integrated water cooling coil.
A,B,…H	Letter designates suggested size of either the oil/water or oil/air external cooling system.

Method 1 : Applying the Reducer Rating Tables

The thermal ratings tables provide the following thermal power capacities that are based upon a 68°F (20°C) temperature condition, along with standard installation and operating conditions. For other temperatures and multiplication factors please see the table on page ⇨🕮 30.

- Convection cooling only ($P_{t0.20}$) resp ($P_{t0.40}$).
- Convection + shaft-driven fan ($P_{t0.20} + P_{tF.20}$) resp ($P_{t0.40} + P_{tF.40}$).
- Convection + integrated water coil ($P_{t0.20} + P_{tC.20}$) resp ($P_{t0.40} + P_{tC.20}$).

⚠ WARNING ⚠

Published thermal ratings are based upon standard installation and operating conditions. When this is not the case the thermal power capacity must be verified through direct calculation or analysis.

Method 2 : Direct Calculation or Analysis

The published thermal power ratings are always defined at standard installation and operating conditions. When this is not the case the thermal power capacity must be verified through direct calculation or analysis.

To avoid gear reducer overheating, one must check to make certain the reducer’s thermal power capacity (P_{wg}) exceeds the input power (P_1) or motor power (P_M) being delivered to the gear unit.

$P_{wg} > P_1$ and $P_{wg} > P_M$

By utilizing the gear reducer operating factors listed on pages ⇨🕮 30 - 31, one can determine the thermal power capacity of the gear reducer, for the type of cooling option that is used or specified.

Aside from relying on pure convection or air cooling, NORD can provide a variety of cooling options to increase the thermal capacity of the gear reducer, including:

- The addition of a shaft-driven fan (⇨🕮 85)
- The addition of an internal water cooler (⇨🕮 81)
- The addition of an oil/water cooling system (⇨🕮 84)
- The addition of an oil/air cooling system (⇨🕮 84)

Case 1: Convection Cooling Only

$P_{wg} = P_{t0.20} \cdot f_v \cdot f_H \cdot f_{ED}$ or $P_{t0.40} \cdot f_v \cdot f_H \cdot f_{ED}$

P_{wg} = Calculated Thermal power rating with convection cooling.
$P_{t0.20}$ = Base Thermal power capacity with convection cooling @ 20°C.
$P_{t0.40}$ = Base Thermal power capacity with convection cooling @ 40°C.
f_v = Ambient air velocity factor.
f_H = Installation altitude factor.
f_{ED} = Duty cycle factor

Case 2: Convection Cooling + Shaft-Driven Fan

$P_{wg.F} = P_{wg} + P_{tF.20} \cdot f_H$ or $P_{wg.F} = P_{wg} + P_{tF.40} \cdot f_H$

$P_{wg.F}$ = Calculated thermal rating with an added shaft fan.
P_{wg} = Calculated Thermal power rating with convection cooling.
$P_{tF.20}$ = Additional thermal power capacity from fan @ 20°C.
$P_{tF.40}$ = Additional thermal power capacity from fan @ 40°C.
f_H = Installation altitude factor.

Case 3: Convection Cooling + Integrated Water Coil

$P_{wg.C} = P_{wg} + P_{tC.20}$

$P_{wg.C}$ = Calculated thermal rating with an added water coil.
P_{wg} = Calculated Thermal power rating with convection cooling.
$P_{tC.20}$ = Additional thermal power capacity from water coil @ 20°C.

Case 4: Convection Cooling + Shaft-Fan + Integrated Water Coil

$P_{wg.FC} = P_{wg.F} + P_{tC.20}$

$P_{wg.FC}$ = Calculated thermal rating with an added shaft, fan and water coil.
$P_{wg.F}$ = Calculated thermal rating with an added shaft fan.
$P_{tC.20}$ = Additional thermal power capacity from water coil @ 20°C.

⚠ *IMPORTANT NOTE* ⚠

For help in determining the size of the oil cooler or the cooling power capacity (Q_{CS1} or Q_{CS2}) of the oil/air cooler, see separate instructions on ⇨🕮 84.

Case 5: Convection Cooling + external Oil/Water Cooling System

$$P_{wg.CS1} = P_{wg} + \left(\frac{Q_{CS1}}{(1-\eta_n)} \cdot f_w \right)$$

$P_{wg.CS1}$ = Calculated thermal rating with a water cooling system.
P_{wg} = Thermal power rating with convection cooling.
Q_{CS1} = Cooling power capacity of the oil/water cooling system
η_N = Nominal gear reducer efficiency (⇨🕮 30)
f_w = Cooling water temperature factor.

Case 6: Convection Cooling + external Oil/Air Cooling System

$$P_{wg.CS2} = P_{wg} + \left(\frac{Q_{CS2}}{(1-\eta_n)} \cdot f_L \right)$$

$P_{wg.CS2}$ = Calculated thermal rating with an air cooling system.
P_{wg} = Thermal power rating for convection cooling.
Q_{CS2} = Cooling power capacity of the oil/air cooling system
η_N = nominal gear reducer efficiency (⇨🕮 30)
f_L = Fan cooling air temperature factor.

Radial Overhung Load [F_R]

A radial overhung load force (F_R) exists when a resultant force is applied to the reducer shaft, by transferring power at a right angle, through an externally mounted power transmission device, such as a belt pulley, chain sprocket, or gear.

The overhung load ratings are…

- to be applied at the midpoint of the shaft (distance x housing edge)
- to be applied without thrust loads
- based upon the least favorable loading direction & least favorable direction of rotation

When calculating the applied radial overhung load force (F_{Rvorh}), corresponding power transmission factor (f_z) must be taken into account.

$$F_R = \frac{2 \cdot M_2}{d_O} \cdot f_Z \cdot f_B \leq F_{Rperm.}$$

F_R = calculated radial load force on the reducer output shaft.
$F_{Rperm.}$ = permissable radial overhung load force [kN]
M_2 = output torque of gear reducer [Nm]
d_O = effective pitch diameter of external power transmission device [mm]
f_Z = power transmission factor
f_B = operating service factor

Transmission Component	Power Transmission Factor [fz]	Notes
Gear	1,1	17 teeth or less
Gear	1,2	18 teeth or more
Chain sprocket	1,4	13 teeth or less
Chain sprocket	1,2	14 to 20 teeth
Chain sprocket	1,0	21 teeth or more
Timing belt pulley	1,5	---
V-belt pulley	1,7	---
Flat belt pulley	2,5	---

Axial/Thrust Load [F_A]

Loads that are directed towards or away from the gearbox, along the axis of the shaft, are called thrust or axial loads (F_A).

Axial force ratings are

- to be applied without radial loads.
- based upon the least favorable loading direction and least favorable direction of rotation.

⚠ IMPORTANT NOTES ⚠

- Consult NORD DRIVESYSTEMS if the applied radial load force is not at the center of the output shaft or if evaluation of an input shaft overhung load is required.
- Both (F_R) and the permissible rated thrust/axial load force (F_A) are based upon an operating service factor condition f_B=1.0.
- In cases where the reducer is subjected to high inertia loads, shock load conditions, suddenly applied forces or long periods of operation, (> 5 hours/day) an appropriate operating service factor f_B >1 must be considered.
- When checking applied radial/axial load forces the appropriate service factor must be applied.
- Please consult NORD if an overhung load and axial load are applied simultaneously.
- Higher radial and axial forces may be possible. For a precise calculation, please state the direction and location of the applied force/s, the desired rotation of the shaft, and the required operating life.

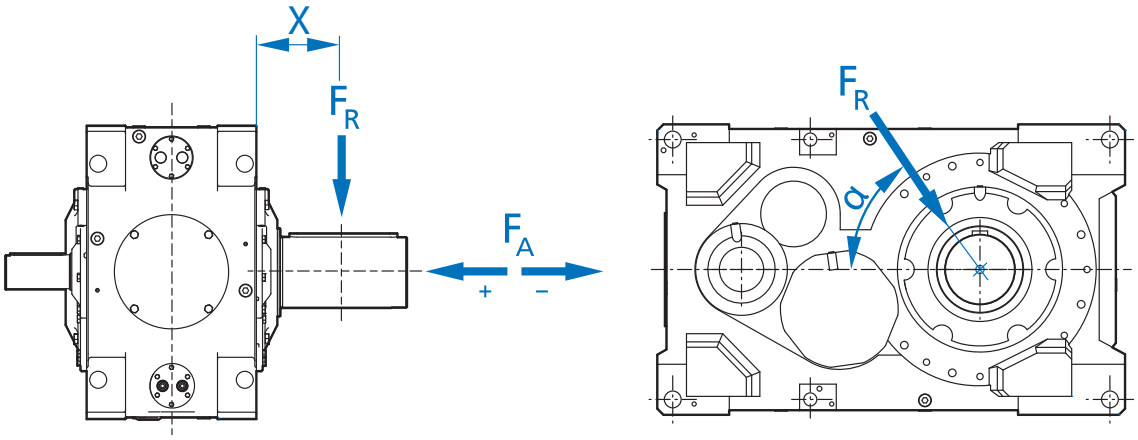

Values for overhanging loads

Unit Type	x [mm]	$F_{r\,max}$ [kN]	$F_{r\,max}$ [lbf]
SK 5.07	125	30	6.700
SK 6.07	125	30	6.700
SK 7.07	147	50	11.200
SK 8.07	147	50	11.200
SK 9.07	195	80	18.000
SK 10.07	195	80	18.000
SK 11.07	210	120	27.000
SK 12.07	235	150	33.700
SK 13.07	283	160	36.000
SK 14.07	283	160	36.000
SK 15.07	275	180	40.500

The table shows the permissible radial transition loads under the following conditions:

- Standard bearings and standard housing material
- $F_{r\,max}$ for M1 / M3 installation position, foot-mounted on a dry and grease-free base
- Radial force applied at the centre of the shaft journal (Distance "X")
- The angle "α" (Alpha) is the most unfavourable
- The operating factor of the gear unit is 1,3 or larger
- No additional axial loads

Please contact NORD for:

- Deviating installation positions
- Permissible axial forces
- Permissible loads for reinforced bearings
- Permissible loads for drive shafts





Efficiency for Calculations η_N

The stated efficiency is only to be used for calculation purposes and does not correspond to the actual efficiency of the gear unit. The factor applies to a normal oil level and the installation positions M1 or M3. An increased oil level causes reduced efficiency.

η_N	Calculated Efficiency			
	SK..207	SK..307	SK..407	SK..507
	0,975	0,960	0,955	0,935

Input factors f_M (Primary Mover)

Additional torque fluctuations due to the type of input machinery are taken into account with the input factor.

f_M	Type of Prime Mover		
	Electric motors Hydro motors Turbines	Piston machines 4-6 cylinder. Degree of inequality 1: 100 to 1 : 200	Piston machines 1 - 3 cylinder. Degree of inequality 1: 100
	1	1,25	1,5

Start-up factors f_{AN}

The start-up factor must be taken into account if the torque applied to the drive during start-up is not known. If the ratio between the start-up torque and the input torque is known. this may be used in the calculation.

f_{AN}	Type of drive running					
	Direct drive	Soft start	Frequency inverter	Star/ Delta	Fluid coupling	Fluid coupling with delay chamber
	3	1,8	1,5...2,0 [1]	1,3	2	1,6

[1] Depending on the start-up ramp setting

Peak load factor with reversing factor f_S

The peak load factor takes into account the frequency and direction of peak loads.

f_S	Direction of load	Load peaks per hour					
		1 - 5	6 - 20	21 - 40	41 - 80	81 - 160	> 160
	one-directional	0,50	0,63	0,70	0,79	0,88	1,05
	reversible	0,70	0,87	0,97	1,09	1,22	1,46

Installation altitude factors f_H

The installation altitude factor takes into account the lower heat dissipation of the gearbox at higher altitudes

f_H	Installation altitude above sea level				
	0m / 0 ft	1.000 m / 3.280 ft	2.000 m / 6.560 ft	3.000 m / 9.840 ft	4.000 m / 13.120 ft
	1,00	0,96	0,91	0,87	0,83

Switch-on time factor f_{ED}

With lower switch-on times, the heat generated by the gearbox decreases.

f_{ED}	Switch-on time				
	100 %	80 %	60 %	40 %	20 %
	1,00	1,08	1,19	1,37	1,75

Service Factors f_B by applications

The operating factor provides the minimum recommended service factor for various applications and takes into account the usual conditions for the particular application listed. If the operating service factor is known for the application, this should be used. If no values are available for the application, refer to the tables below or consult with NORD DRIVESYSTEMS to determine a suitable service factor.

Service Factors - f_B			
Application	**Load Duration**		
	up to 5 hrs per day	5 - 10 hrs per day	over 10 hrs per day
HOISTS			
Drehwerke	1,00	1,40	1,80
FEM 1001	1,00	1,10	1,40
Travelling drives	1,60	1,80	2,00
Luffing gear	1,00	1,20	1,60
PUMPS			
Centrifugal pumps	1,15	1,35	1,45
Piston pumps (1 cylinder)	1,35	1,50	1,80
Piston pumps (multiple cylinders)	1,20	1,40	1,50
Screw pumps	1,25	1,25	1,50
Rotary pumps (gear pumps, vane pumps, rotary piston pumps)	1,25	1,25	1,25
CABLE RAILWAYS			
Materials cableways	1,40	1,40	1,50
Pendulum cableways	1,60	1,60	1,80
Ski tows	1,30	1,30	1,40
Circulating cableways	1,40	1,40	1,60
AGITATORS AND MIXERS			
Agitators for liquids	1,00	1,25	1,50
Agitators for liquids (with suspended solids)	1,25	1,25	1,50
Agitators for liquids (variable density)	1,20	1,50	1,65
Agitators for solid media (uneven material)	1,40	1,60	1,70
Agitators for solid media (even material)	1,35	1,35	1,40
Concrete mixer	1,50	1,50	1,75
Kneading / Conche	1,50	1,50	1,75
Compounder	1,80	1,80	1,80
Aerators	2,00	2,00	2,00

Service Factors - f_B			
Application	**Load Duration**		
	up to 5 hrs per day	5 - 10 hrs per day	over 10 hrs per day
CONVEYOR PLANT			
Bucket elevator (e.g. grain, uniform material)	1,40	1,40	1,50
Bucket elevators (e.g. minerals, uneven material)	1,75	1,75	2,00
Winches	1,40	1,60	1,60
Screw feeder	1,15	1,25	1,50
Belt conveyors ≤ 100 kW	1,15	1,25	1,40
Belt conveyors > 100 kW	1,15	1,30	1,50
Goods lifts *	1,20	1,20	1,50
Passenger lifts *	1,50	1,50	1,80
Plate or chain conveyor	1,75	1,75	2,00
Swinging or vibrating conveyors	1,75	1,75	2,00
Escalators	1,25	1,25	1,55
VENTILATORS			
Fan (axial and radial)	1,50	1,50	1,50
Cooling Tower Fan	2,00	2,00	2,00
COMPRESSORS			
Piston compressors	1,80	1,80	1,90
Centrifugal compressors	1,40	1,40	1,50
Screw compressors	1,50	1,50	1,75
SCREENS			
Rotary screens	1,25	1,25	1,50
Vibrating screens (shaker)	1,55	1,75	2,00
Screens (generally)	1,25	1,25	1,50
BAGGER			
Tilting drives	1,30	1,30	1,50
Crawler vehicles	1,20	1,60	1,80
Bucket wheel drives	2,20	2,20	2,20
Cutting heads	2,20	2,20	2,20

*** Select according to the maximum torque**

Service Factors - f_B			
Application	**Load Duration**		
	up to 5 hrs per day	5 - 10 hrs per day	over 10 hrs per day
MILLS AND DRUMS			
Cooling and drying drums	1,50	1,50	1,60
Tube mills	2,00	2,00	2,00
Ball mills	2,00	2,00	2,00
Hammer mills	1,75	1,75	2,00
Crushers / Shredders	1,55	1,75	2,00
Mills	1,75	1,75	1,75
Chopper	1,55	1,75	2,00
EXTRUDER			
Extruder - plastic	1,40	1,40	1,60
Extruder - rubber	1,50	1,50	1,80
CALENDER			
Calender - paper	1,80	1,80	2,00
Calender - rubber	1,65	1,65	1,65

Service Factors - f_B			
Application	**Load Duration**		
	up to 5 hrs per day	5 - 10 hrs per day	over 10 hrs per day
ROLLERS			
Rollers (paper-, plastic and rubber processing)	1,80	1,80	2,00
Sheet metal / slab rolling reversing	2,50	2,50	2,50
Rollers (Wire, Thin Sheet, Plate)	1,80	1,80	1,80
Cutters	1,55	1,75	2,00
Metal sheet coilers	1,60	1,60	1,75
Straigteners	2,50	2,70	3,00
General steel processing	2,00	2,00	2,00
OTHERS			
Peelers	2,00	2,00	2,00
General	2,00	2,00	2,00
Presses (Pulp- and paper processing)	1,75	1,75	1,75
Frequency Inverters / generators	1,80	1,80	2,00

Service Factors f_B by industry

Service Factors - f_B			
Industry	**Load Duration**		
	up to 5 hrs per day	5 - 10 hrs per day	over 10 hrs per day
STEEL / METAL PROCESSING			
Sheet metal / slab rolling reversing	2,50	2,50	2,50
Rollers (Wire, Thin Sheet, Plate)	1,80	1,80	1,80
Cutters	1,55	1,75	2,00
Metal sheet coilers	1,60	1,60	1,75
Straigteners	2,50	2,70	3,00
General steel processing	2,00	2,00	2,00
MINING / QUARRYING			
MINERALS / CEMENT			
Crushers / Shredders	1,55	1,75	2,00
Vibrating screens (shaker)	1,55	1,75	2,00
Screens (generally)	1,25	1,25	1,50
Bucket wheel drives	2,20	2,20	2,20
Cutting heads	2,20	2,20	2,20
Hammer mills	1,75	1,75	2,00
Slewing gear	1,00	1,40	1,80
Concrete mixer	1,50	1,50	1,75
Cooling and drying drums	1,50	1,50	1,60
Tube mills	2,00	2,00	2,00
Ball mills	2,00	2,00	2,00
Rotary screens	1,25	1,25	1,50
Crawler vehicles	1,20	1,60	1,80
Belt conveyors ≤ 100 kW	1,15	1,25	1,40
Belt conveyors > 100 kW	1,15	1,30	1,50
Winches	1,40	1,60	1,60
Swinging or vibrating conveyors	1,75	1,75	2,00
Bucket elevators (e.g. minerals, uneven material)	1,75	1,75	2,00
Screw feeder	1,15	1,25	1,50
Agitators for solid media (uneven material)	1,40	1,60	1,70
Agitators for solid media (even material)	1,35	1,35	1,40
CHEMICAL / RUBBER			
PLASTIC			
Extruder - plastic	1,40	1,40	1,60
Extruder - rubber	1,50	1,50	1,80
Compounder	1,80	1,80	1,80
Calender - rubber	1,65	1,65	1,65
Fan (axial and radial)	1,50	1,50	1,50
Mills	1,75	1,75	1,75
Rollers (paper-, plastic and rubber processing)	1,80	1,80	2,00
Agitators for solid media (uneven material)	1,40	1,60	1,70
Agitators for solid media (even material)	1,35	1,35	1,40

Service Factors - f_B			
Industry	**Load Duration**		
	up to 5 hrs per day	5 - 10 hrs per day	over 10 hrs per day
AGRIC / TIMBER / FISHIN			
Plate or chain conveyor	1,75	1,75	2,00
General	2,00	2,00	2,00
BEVERAGE / FOOD / DAIRY			
Peelers	2,00	2,00	2,00
Mills	1,75	1,75	1,75
Kneading / Conche	1,50	1,50	1,75
Bucket elevator (e.g. grain, uniform material)	1,40	1,40	1,50
General	2,00	2,00	2,00
PULP / PAPER / SLURRY			
Calender - paper	1,80	1,80	2,00
Cooling and drying drums	1,50	1,50	1,60
Rollers (paper-, plastic and rubber processing)	1,80	1,80	2,00
Presses (Pulp- and paper processing)	1,75	1,75	1,75
General	2,00	2,00	2,00
WOOD PROCESSING			
Plate or chain conveyor	1,75	1,75	2,00
General	2,00	2,00	2,00
COM. WASHERS / DRYERS			
Cooling and drying drums	1,50	1,50	1,60
General	2,00	2,00	2,00
HOISTS			
Slewing gear	1,00	1,40	1,80
FEM 1001	1,00	1,10	1,40
Tilting drives	1,30	1,30	1,50
Luffing gear	1,00	1,20	1,60
Travelling drives	1,60	1,80	2,00
ENTERTAIN / THEATRE			
Goods lifts *	1,20	1,20	1,50
Passenger lifts *	1,50	1,50	1,80
Escalators	1,25	1,25	1,55

*** Select according to the maximum torque**

Service Factors - f_B			
Industry	**Load Duration**		
	up to 5 hrs per day	5 - 10 hrs per day	over 10 hrs per day
WATER / WASTE WATER			
Screw pumps	1,25	1,25	1,50
Agitators for liquids	1,00	1,25	1,50
Agitators for liquids (with suspended solids)	1,25	1,25	1,50
Agitators for liquids (variable density)	1,20	1,50	1,65
Aerators	2,00	2,00	2,00
Centrifugal pumps	1,15	1,35	1,45
Rotary pumps (gear pumps, vane pumps, rotary piston pumps)	1,25	1,25	1,25
Piston pumps (1 cylinder)	1,35	1,50	1,80
Piston pumps (multiple cylinders)	1,20	1,40	1,50
POWER TRANSMISSION			
Cooling Tower Fan	2,00	2,00	2,00
Frequency Inverters / generators	1,80	1,80	2,00

Service Factors - f_B			
Industry	**Load Duration**		
	up to 5 hrs per day	5 - 10 hrs per day	over 10 hrs per day
RECREATION/ SPORTS			
Materials cableways	1,40	1,40	1,50
Pendulum cableways	1,60	1,60	1,80
Ski tows	1,30	1,30	1,40
Circulating cableways	1,40	1,40	1,60
ENERGY / SOLAR / BIOGAS			
Piston compressors	1,80	1,80	1,90
Centrifugal compressors	1,40	1,40	1,50
Screw compressors	1,50	1,50	1,75
RECYCLING			
Crushers / Shredders	1,55	1,75	2,00
Mills	1,75	1,75	1,75
Chopper	1,55	1,75	2,00

Nomenclature

Parallel gear units		Helical-bevel Gear Unit		Output Torque
2-stufig	3-stufig	3-stufig	4-stufig	M_{2max} [kNm]
SK 5207	SK 5307	SK 5407	SK 5507	15
SK 6207	SK 6307	SK 6407	SK 6507	20
SK 7207	SK 7307	SK 7407	SK 7507	25
SK 8207	SK 8307	SK 8407	SK 8507	30
SK 9207	SK 9307	SK 9407	SK 9507	40
SK 10207	SK 10307	SK 10407	SK 10507	50
SK 11207	SK 11307	SK 11407	SK 11507	75
SK 12207	SK 12307	SK 12407	SK 12507	110
SK 13207	SK 13307	SK 13407	SK 13507	150
SK 14207	SK 14307	SK 14407	SK 14507	190
SK 15207	SK 15307	SK 15407	SK 15507	250

Combinations with parallel and bevel gear units

Parallel gear units		Bevel gear units		Output Torque
Nominal Ratio i_N	5-stage	Nominal Ratio i_N	6-stage	M_{2max} [kNm]
355 - 1600	SK 5307 / 3282	450 - 1600	SK 5307 / 9032.1	15
400 - 1600	SK 6307 / 3282	500 - 1600	SK 6307 / 9032.1	20
355 - 1600	SK 7307 / 4282	450 - 1600	SK 7307 / 9032.1	25
400 - 1600	SK 8307 / 4282	500 - 1600	SK 8307 / 9032.1	30
400 - 1600	SK 9307 / 5282	450 - 1600	SK 9307 / 9042.1	40
450 - 1600	SK 10307 / 5282	500 - 1600	SK 10307 / 9042.1	50
180 - 1600	SK 11307 / 6282	200 - 1600	SK 11307 / 9052.1	75
125 - 160	SK 11307 / 7282	200 - 1600		
180 - 1600	SK 12307 / 7282	200 - 1600	SK 12307 / 9072.1	110
125 - 160	SK 12307 / 8282	200 - 1600		
200 - 1600	SK 13307 / 7282	315 - 1600	SK 13307 / 9072.1	150
125 - 180	SK 13307 / 9282	180 - 280	SK 13307 / 9082.1	
160 - 1600	SK 14307 / 9282	450 - 1600	SK 14307 / 9082.1	190
250 - 1600	SK 15307 / 8282	280 - 1600	SK 15307 / 9082.1	250
180 - 200	SK 15307 / 9282	180 - 250	SK 15307 / 9086.1	
125 - 160	SK 15307 / 10282.1	180 - 250	SK 15307 / 9086.1	

Ordering Example

SK 11 2 07 AS H IEC CC 200L/4 BRE

- **Brake Designation**
- **Motor Designation** (IEC or NEMA)
- **Additional Options** (CC, FAN...)
- **Motor mountings** (IEC, NEMA, MST, MSF...)
- **Additional Options** (G, D, H, B...)
- **Shaft & Mounting Options** (A, AF, AS, V, L...)
- **Type designations**
- **Amount of Stages** (2, 3, 4) → 2: 2-Stage Helical gear unit; 3: 3-Stage Helical gear unit; 4: 3-Stage Helical-bevel gear unit; 5: 4-Stage Helical-bevel gear unit
- **Gearbox Size** (5, 6, 7, 8, 9, 10, 11, 12, 13, 14, 15)

Example Explanation

Case Size 11 Gearbox with a 2-Stage Helical gear unit, Hollow Shaft with Shrink disc and Cover, an IEC gearbox type with a Cooling Coil and a 200L/4 Motor that is provided with a brake.

Mounting Position System

For gear units and gear motors, NORD DRIVESYSTEMS specifies between six installation positions from M1 to M6 as shown in the following diagrams. The M1 and M3 mounting surfaces vary between the 2 and 3 stage parallel products.

MAXXDRIVE™ 2-Stage Parallel Gear Unit

M1 **2-Stage unit standard Installation**
M2 Output shaft located on upper end of gearbox
M3 3-Stage unit standard installation
M4 Output shaft located on lower end of gearbox
M5 Output shaft facing downwards
M6 Output shaft facing upwards

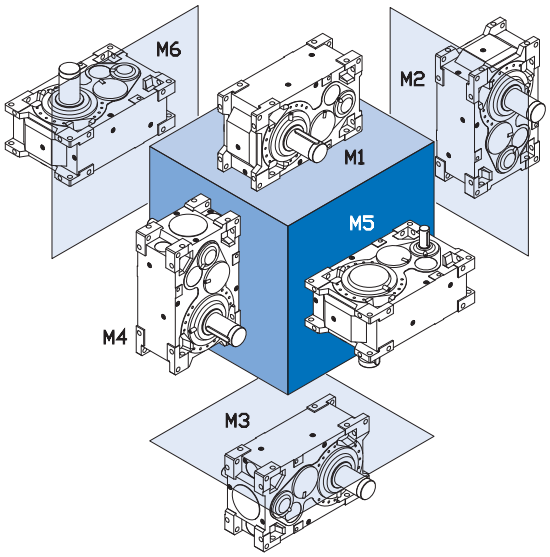

MAXXDRIVE™ 3-Stage Parallel Gear Unit

M1 2-Stage unit standard installation
M2 Output shaft located on upper end of gearbox
M3 **3-stage unit standard installation**
M4 Output shaft located on lower end of gearbox
M5 Output shaft facing downwards
M6 Output shaft facing upwards

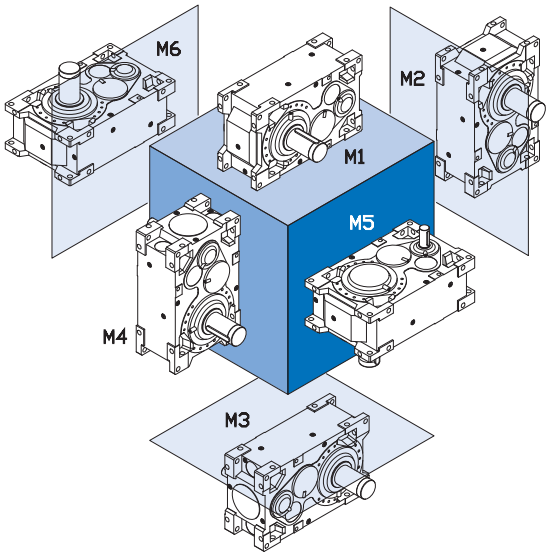

Pivoted and Variable Mounting Positions

If you have any mounting requirements that vary from the standard positions, please consult NORD DRIVESYSTEMS.

Mounting Configuration

Mounting Position System

For gear units and gear motors, NORD DRIVESYSTEMS specifies between six installation positions from M1 to M6 as shown in the following diagrams. The M1 and M3 mounting surfaces vary between the 3 and 4 stage units within the right-angle products.

MAXXDRIVE™ 3-Stage Bevel Gear Unit

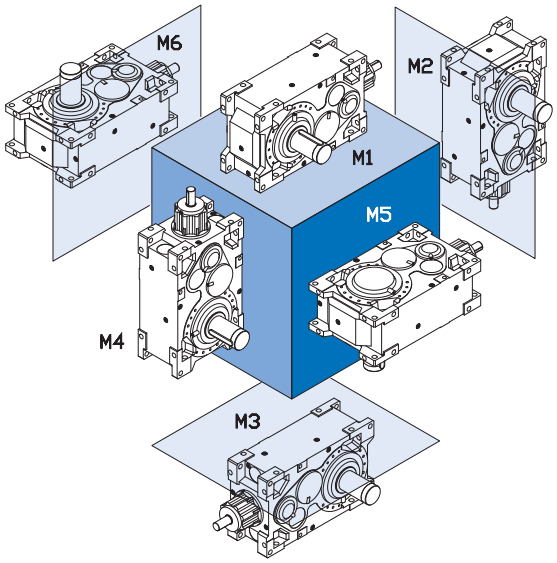

M1 **3-Stage unit standard Installation**
M2 Output shaft located on upper end of gearbox
M3 4-Stage unit standard Installation
M4 Output shaft located on lower end of gearbox
M5 Output shaft facing downwards
M6 Output shaft facing upwards

MAXXDRIVE™ 4-Stage Bevel Gear Unit

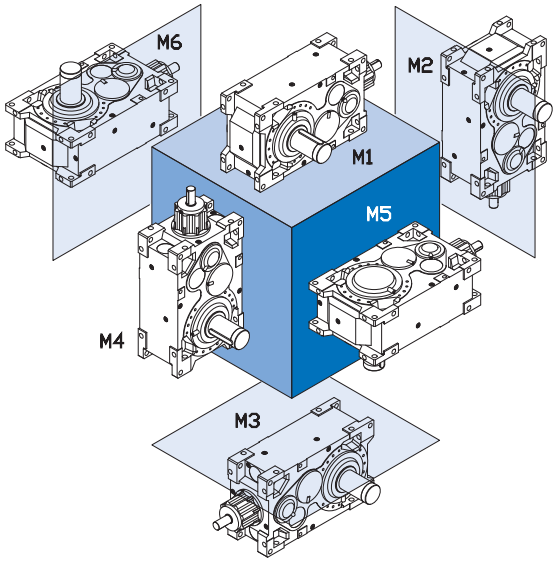

M1 3-Stage unit standard Installation
M2 Output shaft located on upper end of gearbox
M3 **4-Stage unit standard installation**
M4 Output shaft located on lower end of gearbox
M5 Output shaft facing downwards
M6 Output shaft facing upwards

Pivoted and Variable Mounting Positions

If you have any mounting requirements that vary from the standard positions, please consult NORD DRIVESYSTEMS.

Mounting Surfaces

The mounting surface specifies the side on which the gear unit is fixed. Six mounting surfaces are available based on the diagrams below (F1 - F6).

In the following diagram, the mounting surfaces for mounting position M1 are indicated.

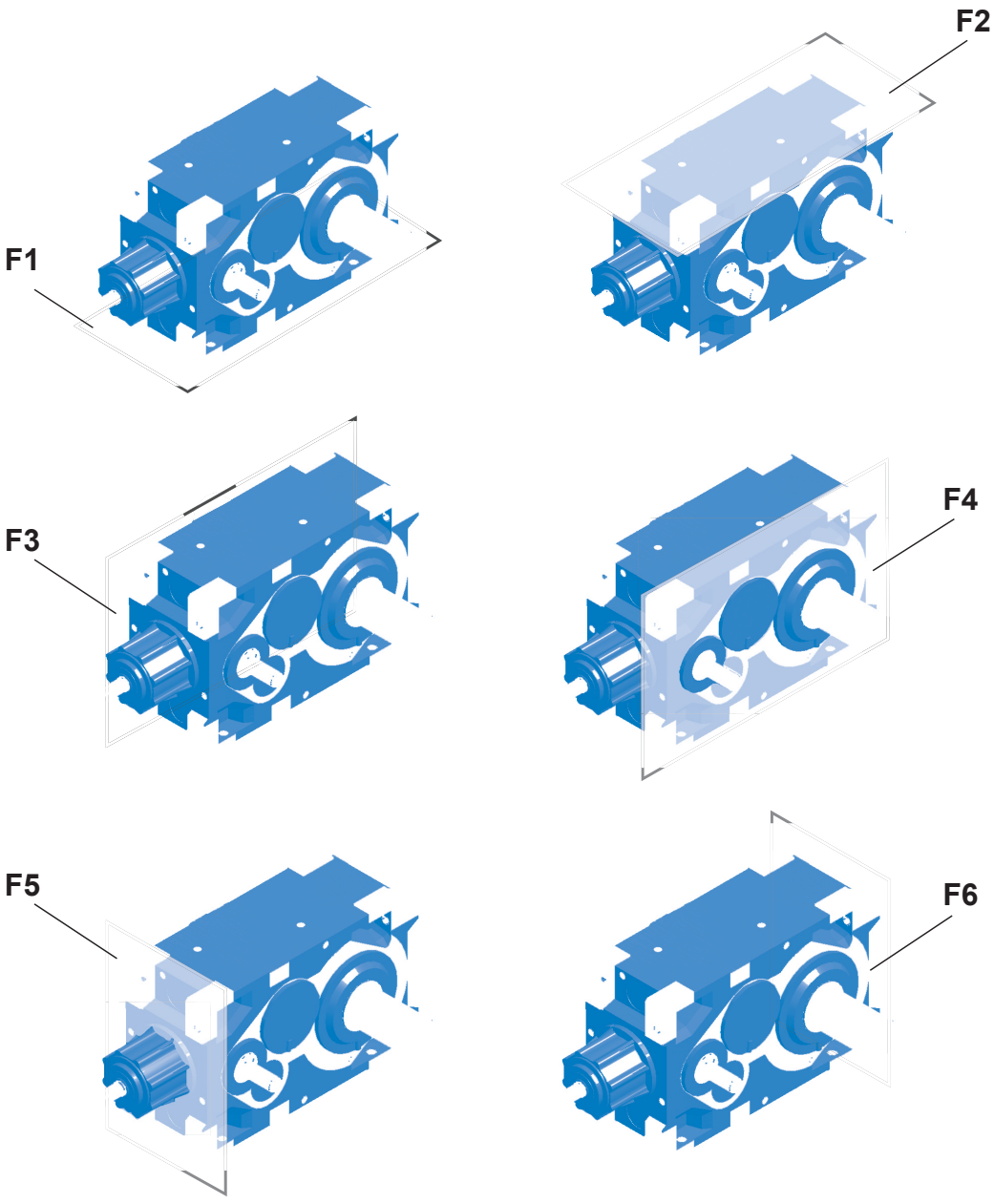

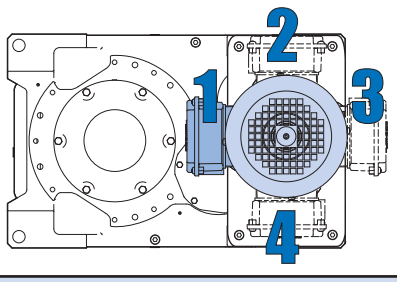

Parallel Gear Unit Terminal Box Positions *

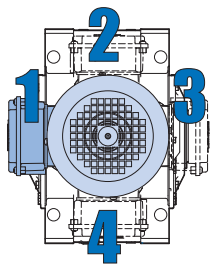

Right-Angle Gear Unit Terminal Box Positions *

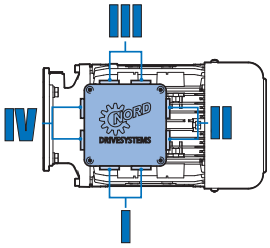

Cable Entry Positions *

* Example (only for installation M1)

Mounting Configuration

NORD provides gearmotors, speed reducers and motors that can be configured very differently to suit customer needs. When ordering, it is beneficial that the drive be specified exactly the way you want it delivered.

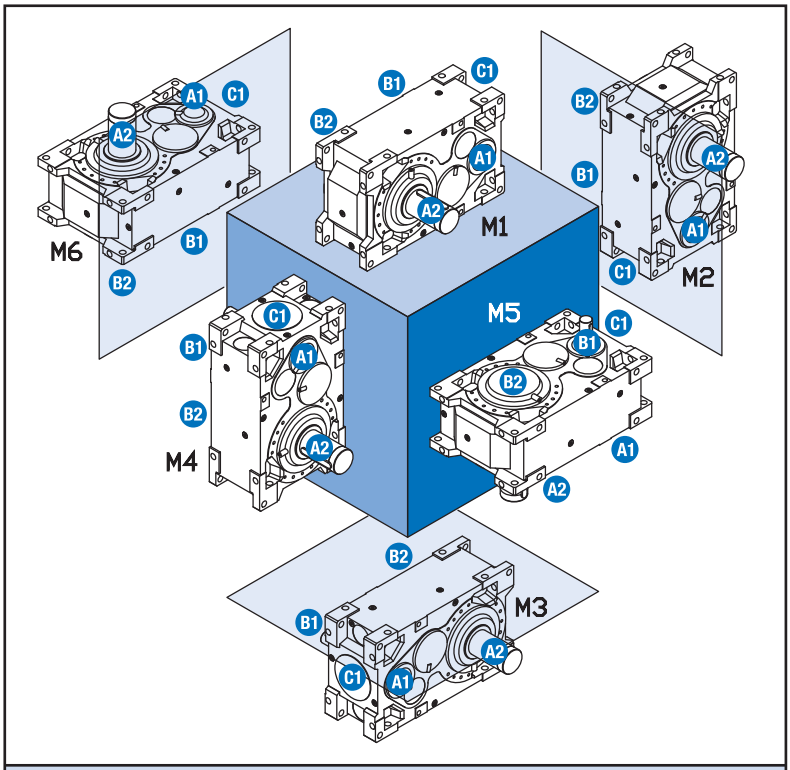

Mounting Configuration M1 - M6
Shaft Configuration A1 - C1 Position of Attachments A1 - C1

Shaft Configuration

The positions of the required shaft outlets are determined by viewing the gearbox from above in a default horizontal mounting position. M1 is the default (standard) for 2-stage parallel and 3-stage helical-bevel gear units. Mounting position M3 is the default (standard) for 3-stage gear parallel and 4-stage helical-bevel units.

Position of Attachments

The positions of attached elements such as backstops, fans, flange-mounted pumps, drive flanges, agitator flanges etc. are determined according to the same principle as the shaft positions.

Terminal box and cable entry

In the standard position, the terminal box is on the left hand side looking at the motor from the rear

If another arrangement is required, please express during ordering. Whenever ordering the cable entry in position IV please request information from NORD DRIVESYSTEMS.

In brake motors between frame size 63 to 132, the cable entry is only available in positions I and III.

Rotation Direction of Input/Output shafts

The direction of rotation for the gearbox shafts are dependant upon the installation position and the shaft configuration.

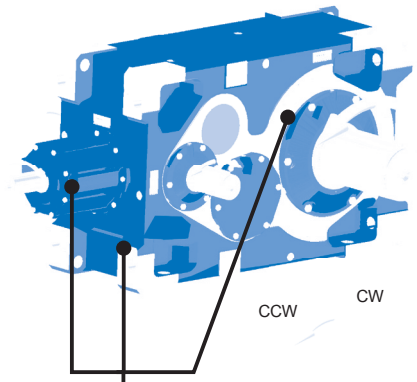

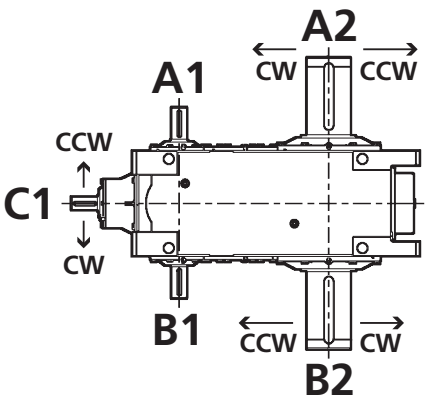

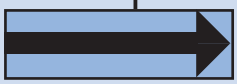

The labels that come standard on the units mark the direction of free rotation in the event that backstops are used.

Installation position[1] M1 Direction of view[1] F2		Rotation Direction of Input			Rotation Direction of Output	
Shaft Positions[1] =>		C1	A1	B1	A2	B2
SK ..207	or	---	CW	CCW	CW	CCW
		---	CCW	CW	CCW	CW
SK ..307	or	---	CW	CCW	CCW	CW
		---	CCW	CW	CW	CCW
SK ..407 (Standard)	or	CW	CW	CCW / R	CW	CCW
		CCW	CCW	CW / R	CCW	CW
SK ..407 (Optional)	or	CW	CCW / R	CW	CCW	CW
		CCW	CW / R	CCW	CW	CCW
SK ..507 (Standard)	or	CW	CCW / R	CW	CW	CCW
		CCW	CW / R	CCW	CCW	CW
SK ..507 (Optional)	or	CW	CW	CCW / R	CCW	CW
		CCW	CCW	CW / R	CW	CCW

[1] Please see ⇨ 37 - 38

Gear Stage Illustration for Right-Angle MAXXDRIVE™ units

Below is the standard rotation direction of both the Parallel and Right-Angled units. By flipping the bevel gearset on our right-angle gear units, the rotation direction may be reversed.

Two-stage Parallel Gear Unit (5207-15207)

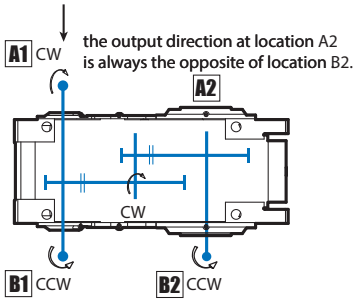

M1 - View from above

Three-stage Parallel Gear Unit (5307-15307)

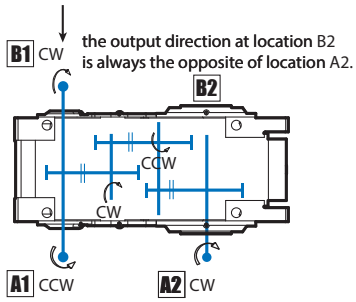

M3 - View from above

Three-stage Right-Angle Gear Unit (5407-15407)

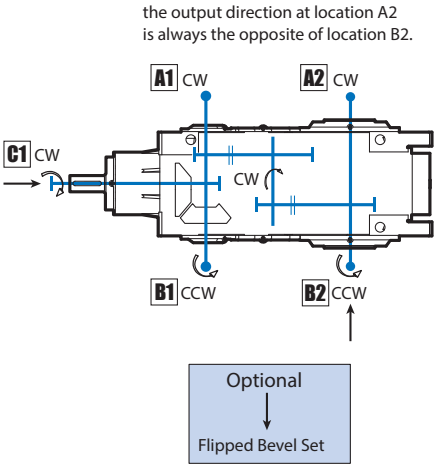

Four-stage Right-Angle Gear Unit (5507-15507)

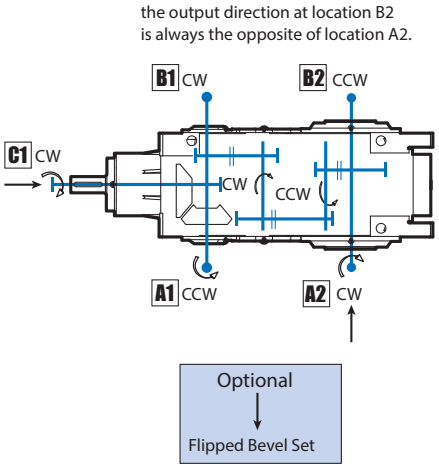

Three-stage Right-Angle Gear Unit (5407-15407)

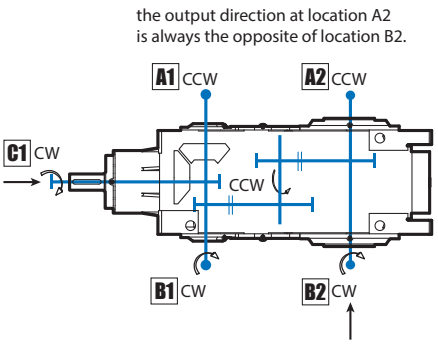

Four-stage Right-Angle Gear Unit (5507-15507)

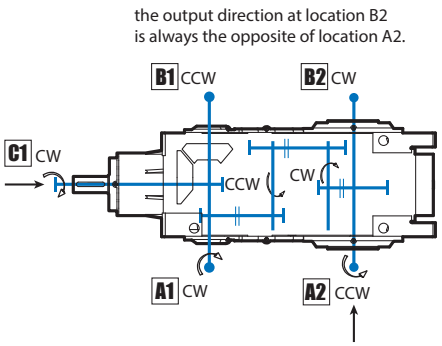

Couplings (input and output)

Upon request, NORD DRIVESYSTEMS can provide a variety of coupling types and styles. In addition to various flexible, fail-safe couplings (Jaw coupling / Bolt coupling) soft-start couplings (fluid couplings), and safety couplings can be supplied. As output couplings, short length elastic fail-safe bolt couplings can be supplied, as well as gear couplings which can also span greater distances. Please contact us if you have special requirements for input or output couplings.

- Common input couplings include: flexible, jaw-style, fluid couplings (to help control start-up), safety couplings or torque-overload couplings.
- Common output couplings include: elastic bolt couplings (for shorter span lengths), flange couplings or gear couplings (for larger span lengths).

Sealing systems

As standard, our gear units are equipped with an efficient sealing system that is suitable for many environments and their ambient conditions . Depending on the case size and gear unit type, the gearbox is supplied with one radial shaft seal (FKM) and gamma ring or a cartridge seal on the drive input shaft and two radial shaft seals on the output shaft. The seal material is NBR (Buma N), or FKM (Fluroelastomer) optionally. For operating oil temperatures (oil temperatures) above 85°C, FKM seals should be used. The optional shaft sealing rings can be supplied with or without a dust protection collar.

The choice of optimum sealing systems depends on the operating and ambient conditions, as well as the specified applications gear unit requirements. Please contact NORD DRIVESYSTEMS with any questions regarding your sealing system selections.

The following output seal designs are available:

- Two shaft sealing rings (standard)
- Taconite seals
- Gamma ring seals (without illustration)

Please contact us if sealing systems other than those listed here are required.

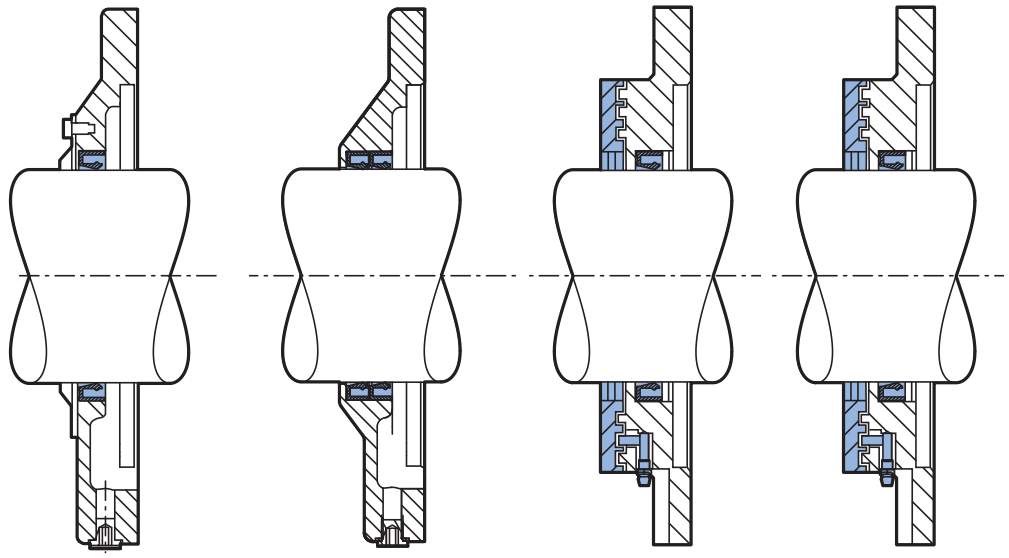

Standard (Input)	Standard (Output)	Taconite F (Input)	Taconite F (Output)
(one sealing ring & a gamma ring seal)	(two shaft sealing rings)	(Grease-Lubricated labyrinth seal; can be re-lubricated)	(Grease-filled outer shaft sealing ring; can be re-lubricated)

Lubrication systems

NORD DRIVESYSTEMS delivers all Industrial Gear Units without oil to eliminate unneccessary shipping costs. NORD DRIVESYSTEMS recommends only high quality gear oils that provide excellent wear and load bearing protection, corrosion protection and aging resistance. The lubricant must also contain anti-wear and/or extreme pressure additives to provide adequate protection while operating in a mixed friction regime (or when partial to full boundary lubrication conditions exist).

As a minimum, the lubricating oil should also meet the following criteria:

- The gear oil must exhibit high film strength in order to handle high torque, shock loads, and start-up conditions.
- The gear oil should have the ability to operate at moderate sump temperatures without losing viscosity or thickness. Sump temperatures should be allowed to approach 80°C-85°C (176°F-185°F) for mineral oil or 105°C (221°F) for synthetic oil
- The gear oil should have a minimum viscosity index of 95 or higher.
- FZG scuffing load test result > Stage 12 (per DIN 51354-2).
- FAG-FE-8 roller bearing test should result in roller element wear < 30 mg and cage wear less than 100 mg (per DIN51819-3).
- Compatibility with standard elastomeric sealing materials must also be assured.

Lubrication Types

The lubricant is an element of design and often an optimal lubricant viscosity or type is recommended by NORD on the basis of the operating and ambient conditions and the type or gear unit being specified.

While the MAXXDRIVE™ gear units are designed to be able to operate with high performance mineral oil, NORD strongly recommends the use of synthetic oil.

Only CLP (DIN 51517- 3) quality oils are approved for the MAXXDRIVE™ gear units. A list of possible oils meeting the general CLP requirements (found on page ⇨🕮 48), are categorized in the following table.

CLP	High-performance mineral oil (an EP additive is recommended by NORD).
CLP HC	Synthetic polyalphaolefin oil
CLP PG	Synthetic polyglycol oil
CLP HC H1 or CLP PG H1	Food-grade oil (must qualify as an NSF-H1 oil per FDA 212 CFR 178.3570).
E	Bio-degradable oil

⚠ ***IMPORTANT NOTE*** ⚠
NORD will determine the type and viscosity of the lubricant for each specific order. This will be entered in the order confirmation and on the reducer nameplate.

Lubrication Methods

MAXXDRIVE™ gear units that are mounted in a horizontal position are intended to be oil splash lubricated. Those units mounted in a vertical or standing position may utilize bath (immersion) lubrication. In many instances forced lubrication or pressure lubrication offers advantages as well.

1. Splash Lubrication

The gearbox oil is kept at a relatively low level. The gearing and bearing components that do not dip into the oil are lubricated by splashing oil. This is the usual form of lubrication for horizontal installation positions (M1/M3). In slow speed operation, oil splash may not deliver lubricant to all critical areas. In high speed operation, oil splash may contribute to excessive churning losses and undesirable reducer heating.

2. Bath (Immersion) Lubrication

The gear unit is full or nearly full with oil with all gear and bearing surfaces completely or partially immersed in an oil bath. Bath lubrication is one way of assuring proper lubrication to gear units mounted in standing (M2 or M4) or vertical (M5 or M6) positions. Bath lubrication may sometimes lead to higher oil churning losses, higher operating temperatures, and reduced efficiency. These instances may also dictate the need for larger gear cases or additional cooling options and accessories. Pressure (forced) lubrication may eliminate the need for more costly accessories or options while also reducing operating temperatures and extending lubrication life.

3. Pressure (Forced) Lubrication [LC, LCX]

With pressure or forced lubrication, a pump (shaft driven or motorized) is provided, which allows a relatively low oil level to be maintained. The pump and oil distribution lines deliver the oil to all critical gear and bearing areas. Oil levels may be lowered, even compared to standard splash oil levels. This type of lubrication is advisable for the following operating conditions:

- When splash or bath lubrication is not possible or not thermally advantageous.
- When high input speeds are present and the speed limit for other lubrication methods are being exceeded (based on size, ratio and mounting).
- If a drywell is required with a vertical output shaft.

⚠ **IMPORTANT NOTE** ⚠
Consult NORD when considering either bath lubrication or pressure lubrication so that appropriate options and accessories can be recommended.

Typical Lubrication Recommendations

The MAXXDRIVE™ gear units are designed to be able to operate with high performance mineral oil containing an extreme pressure (EP) additive. A viscosity grade ISO VG220 EP (AGMA 5 EP) mineral oil is typical for ambient temperature conditions between 0°C-40°C (32°F-104°F).

While the MAXXDRIVE™ gear units are designed to be able to operate with high performance mineral oil, NORD strongly recommends the use of synthetic oil. Compared to mineral oil, synthetic oil offers the following advantages that provided added wear protection and extend reducer component life:

- Higher film strength, lower traction coefficient and improved lubricity.
- Reduced internal friction (reduced by as much as ½ compared to mineral oil) resulting in lower operating temperatures and improved gear efficiency.
- Superior wear and thermo-oxidative resistance, provides enhanced system cleanliness and enables longer service intervals.
- Higher viscosity index offering improved low temperature and high temperature stability.

Oil Filling Guidelines

Prior to start-up the proper oil fill level must be established. Unless requested, NORD DRIVESYSTEMS furnishes all Industrial Gear Units without oil in order to eliminate additional shipping costs.

⚠ IMPORTANT NOTE ⚠

- All Industrial Gear Units gear units are shipped dry. The tables starting on page ⇨🕮 50 provide a guideline for the lubrication amount based upon the installation position.
- The actual oil volume will vary depending upon the gear unit type and configuration, mounting position and ratio.
- When filling the reducer, always check the oil-fill level using the reducer's oil level plug. Oil plug locations for common mounting configurations are shown on page ⇨🕮 49.
- In some instances NORD DRIVESYSTEMS may supply a pre-stage gear unit or an auxiliary (inching) drive and these units are typically filled with the proper type and amount of oil (see separate user manual documentation).

Lubrication Replacement

If the gear unit is filled with mineral oil, the lubricant should be replaced at least after every 10,000 operating hours or after every two years, whichever comes first.

If the gear unit is filled with synthetic oil, the lubricant should be replaced at least after every 20,000 operating hours or after every 3 years, whichever comes first.

Often gear reducers are exposed to extreme operating conditions or hostile environments such as: high humidity or wet conditions, high ambient temperatures or high operating temperatures, or dirty and dusty operating areas. Especially in these situations, it is important to change the reducer lubricant more often that what is suggested as a typical guideline.

Please refer for details to the Operating and Assembly Instructions B1050 resp. B2050

⚠ WARNING ⚠

- Do not mix different oils with different additive packages or different base oil formulation types. Polyglycol (PG) oils are not miscible with other oil types and should never be mixed with mineral oil, or Polyalphaolefin (PAO) oil.
- When making a lubrication change, check with the lubrication supplier to assure compatibility with the original oil used and to obtain recommended cleaning or flushing procedures.

Importance of Routine Oil Analysis

Routine oil analysis, sound lubrication practices, and good tracking of oil performance trends will help establish proper lubrication maintenance and changeout intervals. To maximize equipment reliability NORD Gear recommends a condition-based lubrication maintenance program be applied to the MAXXDRIVE™ gear units. NORD DRIVESYSTEMS suggests replacing the gear oil if oil analysis indicates any of the following:

- Viscosity has changed by approximately 10% or more.
- Debris particles (silicon, dust, dirt or sand) exceed 25 ppm.
- Iron content exceeds 100 ppm.
- Water content is greater than 0.05% (500 ppm).
- The total acid number (TAN) tests indicate a significant level of oxidative break-down of the oil, and a critical reduction in performance; If the TAN number measured changes by more than 40% over the oil, then an oil change would be recommended.

Selection of lubricants

The following pages show the lubricants which have been approved by NORD DRIVESYSTEMS for use in MAXXDRIVE gear units.

A suitable viscosity class and lubricant type has been selected by NORD DRIVESYSTEMS for each application. These specifications form a part of the order confirmation and may not be changed without written consent from NORD. However, users may freely select the brand of lubricant from these lists.

The following tables state the minimum oil temperature which can be accepted for various lubrication systems and oil types in order to remain below 1.800 cSt on starting the gear unit as described above. If the temperatures are lower, the oil must be heated before starting.

Minimum gear unit starting temperature

For ATEX applications, the temperature limits must be checked in each case. Please contact NORD DRIVESYSTEMS.

Mineral oil

Type of lubrication	Viscosity class			
	ISO VG460	ISO VG320	ISO VG220	ISO VG150
Immersion lubrication / bath lubrication	-10 °C	-12 °C	-15 °C	-20 °C
Pressure lubrication with motor pump	on request	15 °C	10 °C	5 °C
Pressure lubrication with shaft-end pump	on request	5 °C	0 °C	-5 °C

Synthetic oil

Type of lubrication	Viscosity class			
	ISO VG460	ISO VG320	ISO VG220	ISO VG150
Immersion lubrication / bath lubrication	-25 °C	-25 °C	-25 °C	-25 °C
Pressure lubrication with motor pump	on request	5 °C	0 °C	-5 °C
Pressure lubrication with shaft-end pump	on request	-5 °C	-10 °C	-15 °C

Available Lubricants

Lubricant Type	Details on Type Plate	DIN / ISO Ambient Temp.	bp	Castrol	FUCHS	KLÜBER LUBRICATION	Mobil	Shell
Mineral Oil	CLP 220	ISO VG 220 -10…40°C	Energol GR-XP 220	Alpha SP 220 Alpha MAX 220 Optigear BM 220 Tribol 1100 / 220	Renolin CLP 220 Renolin CLP 220 Plus Gearmaster CLP 220	Klüberoil GEM 1 - 220 N	Mobilgear 600 XP 220 Mobilgear XMP 220	Shell Omala F 220
	CLP 320	ISO VG 320 -10…40°C	Energol GR-XP 320	Alpha SP 320 Alpha MAX 320 Optigear BM 320 Tribol 1100 / 320	Renolin CLP 320 Renolin CLP 320 Plus Gearmaster CLP 320	Klüberoil GEM 1 - 320 N	Mobilgear 600 XP 320 Mobilgear XMP 320	Shell Omala F 320
	CLP 680	ISO VG 680 0…40°C	Energol GR-XP 680	Alpha SP 680 Optigear BM 680 Tribol 1100 / 680	Renolin CLP 680 Renolin CLP 680 Plus Gearmaster CLP 680	Klüberoil GEM 1 - 680 N	Mobilgear 600 XP 680 Mobilgear XMP 680	-
Synthetic Oil (Polyglycol)	CLP PG 220	ISO VG 220 -25…40°C	Enersyn SG-XP 220	Tribol 1300 / 220	Renolin PG 220 Gearmaster PGP 220	Klübersynth GH 6 - 220	-	Shell Omala S4 WE 220
	CLP PG 320	ISO VG 320 -25…40°C	Enersyn SG-XP 320	Tribol 1300 / 320	Renolin PG 320 Gearmaster PGP 320	Klübersynth GH 6 - 320	-	Shell Omala S4 WE 320
	CLP PG 680	ISO VG 680 -20…40°C	Enersyn SG-XP 680	Tribol 1300 / 680	Renolin PG 680 Gearmaster PGP 680	Klübersynth GH 6 - 680	-	Shell Omala S4 WE 680
Synthetic Oil (hydro-carbons)	CLP HC 220	ISO VG 220 -45…40°C	Enersyn EP-XF 220	Optigear Synth X 220 Tribol 1710 / 220	Renolin Unisyn CLP 220 Gearmaster SYN 220	Klübersynth GEM 4 - 220N	Mobil SHC 630	Shell Omala S4 GX 220
	CLP HC 320	ISO VG 320 -25…40°C	Enersyn EP-XF 320	Optigear Synth X 320 Tribol 1710 / 320	Renolin Unisyn CLP 320 Gearmaster SYN 320	Klübersynth GEM 4 - 320N	Mobil SHC 632	Shell Omala S4 GX 320
	CLP HC 680	ISO VG 680 -10…40°C	-	Optigear Synth X 680	Renolin Unisyn CLP 680 Gearmaster SYN 680	Klübersynth GEM 4 - 680N	-	Shell Omala S4 GX 680
Bio-degradable Oil	CLP-E 220	ISO VG 220 -5…40°C	-	Tribol BioTop 1418 / 220	Plantogear 220 S Gearmaster ECO 220	Klübersynth GEM 2 - 220	-	Shell Naturelle Gear Fluid EP 220
	CLP-E 320	ISO VG 320 -5…40°C	-	Tribol BioTop 1418 / 320	Plantogear 320 S Gearmaster ECO 320	Klübersynth GEM 2 - 320	-	Shell Naturelle Gear Fluid EP 320
	CLP-E 680	ISO VG 680 -5…40°C	-	-	Plantogear 680 S Gearmaster ECO 680	-	-	-
Foodstuff Compatible Oil	CLP PG H1 220	ISO VG 220 -25…40°C	-	Optileb GT 220	Cassida Fluid WG 220	Klübersynth UH1 6 - 220	-	-
	CLP PG H1 320	ISO VG 320 -20…40°C	-	Optileb GT 320	Cassida Fluid WG 320	Klübersynth UH1 6 - 320	-	-
	CLP PG H1 680	ISO VG 680 -5…40°C	-	Optileb GT 680	Cassida Fluid WG 680	Klübersynth UH1 6 - 680	-	-

This table shows comparable lubricants from various manufacturers. The manufacturer shown in this table may be changed within a particular viscosity or lubricant type. NORD must be contacted in case of change of viscosity or lubricant type or supplier, as otherwise no warranty for the functionality of our gearboxes may be accepted.

Bearing lubricants

Lubricant type	Ambient temperature	bp	Castrol	FUCHS	KLÜBER LUBRICATION	Mobil	Shell
Mineral oil-based grease	-30…60°C	Energrease LS 2 Energrease LS-EP 2	Longtime PD 2	RENOLIT GP 2 RENOLIT LZR 2 H	-	Mobilux EP 2	Gadus S2 V100 2
	-50…40°C		Optitemp LG 2	RENOLIT JP 1619	-	-	-
Synthetic greases	-25…80°C	Energrease SY 2202	Tribol 4747	RENOLIT HLT 2 RENOLIT LST 2	PETAMO GHY 133 N Klüberplex BEM 41-132	Mobiltemp SHC 32	Cassida EPS2
Rapidly biodegradable grease	-25…40°C	Biogrease EP 2	-	PLANTOGEL 2 S	Klüberbio M 72-82	Mobil SHC Grease 102 EAL	Naturelle Grease EP2
Food-compatible grease	-25…40°C	-	Obeen UF 2	RENOLIT G 7 FG 1	Klübersynth UH1 14-151	Mobilgrease FM 222	Cassida RLS2

The manufacturer can be changed for a given grease type. NORD must be consulted if the type of grease or the range of ambient temperatures is changed. Otherwise no guarantee can be accepted for the function of the gear unit.

Oil Fill, Drain and Vent Locations



All MAXXDRIVE™ gear units are supplied with an oil level plug, an oil fill plug and a breather. All of the remaining holes are sealed. Alternative positions based on the locations of the remaining holes can be provided if requested.

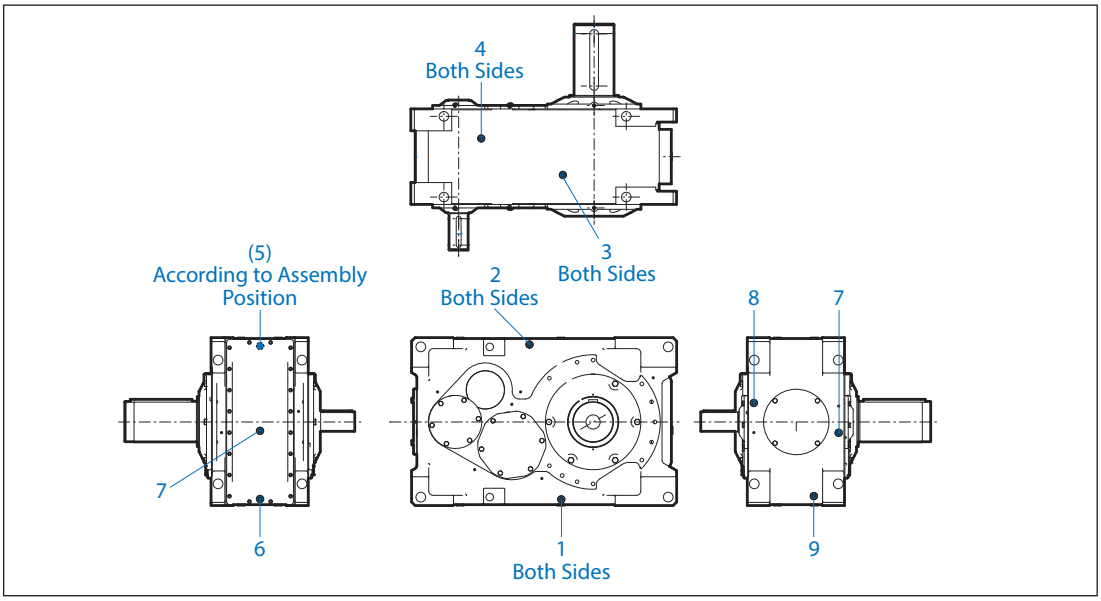

Remark: The exact positions will be shown in the installation drawing.

Parallel Industrial Gear Unit
Mounting Positions & Oil Fill Quantities

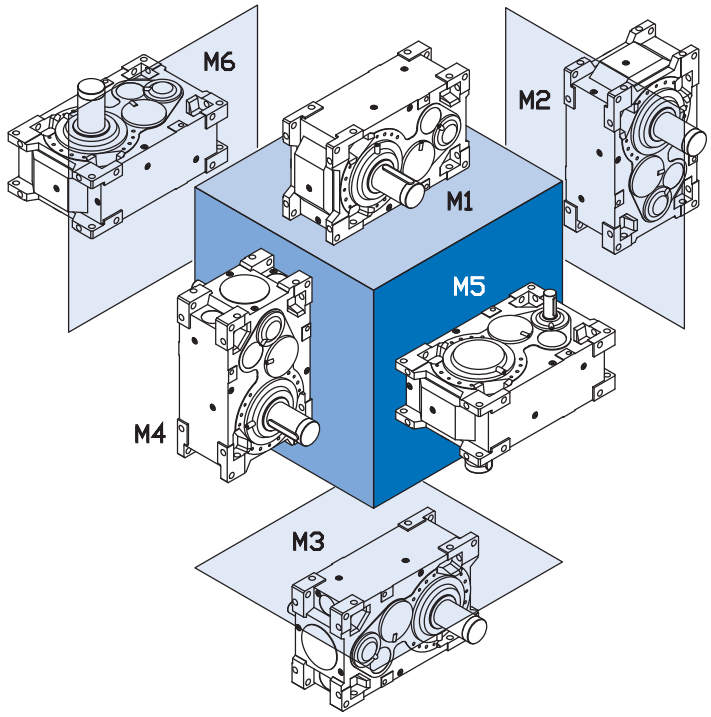

Unit Type	M1 Liters	M2 Liters	M3 Liters	M4 [2] Liters	M5 [2] Liters	M6 [2] Liters	max [3] Liters
SK 5207 / 5307	21	31 / -	23	39 / -	37 / -	37 / -	51
SK 6207 / 6307	26	37 / -	29	45 / -	42 / -	42 / -	60
SK 7207 / 7307	36	45 / -	36	48 / -	46 / -	46 / -	62
SK 8207 / 8307	44	55 / -	44	59 / -	57 / -	57 / -	76
SK 9207 / 9307	57	71 / -	73	76 / -	74 / -	74 / -	98
SK 10207 / 10307	72	89 / -	90	96 / -	92 / -	92 / -	123
SK 11207 / 11307	105	130 / 50 [4]	105	140 / 40 [4]	135 / 45 [4]	135 / 45 [4]	180
SK 12207 / 12307	116	185 / 83 [4]	150	203 / 65 [4]	199 / 69 [4]	199 / 69 [4]	268
SK 13207 / 13307	154	256 / 107 [4]	154	290 / 73 [4]	268 / 95 [4]	268 / 95 [4]	363
SK 14207 / 14307	225	374 / 156 [4]	225	424 / 107 [4]	392 / 139 [4]	392 / 139 [4]	531
SK 15207 / 15307	358	415 / 160 [4]	335	450 / 125 [4]	405 / 170 [4]	412 / 163 [4]	575

Unit Type	R (Backstop) Liters	VL2/3/4/6 (Spread Bearing) Liters	VL5 (Extruder Bearing) Liters	WX (Auxillary Drive) Liters	OT (Oil Tank) Liters
SK 5207 / 5307	+1	+ 8	+ 8	+3	+ 7
SK 6207 / 6307	+1	+ 8	+ 8	+3	+ 7
SK 7207 / 7307	+1	+ 8	+ 8	+5	+ 7
SK 8207 / 8307	+1	+ 8	+ 8	+5	+ 7
SK 9207 / 9307	+2	+12	+12	+5	+ 7
SK 10207 / 10307	+2	+12	+12	+5	+ 7
SK 11207 / 11307	+2	+15	+15	+6,5	+15
SK 12207 / 12307	+3	+20	-	+6,5	+15
SK 13207 / 13307	+5	+25	-	+6,5	+15
SK 14207 / 14307	+6	+25	-	+6,5	+15
SK 15207 / 15307	+7	+30	-	+6,5	+15

CS1/CS2 (External Cooling) Liters	
A	+ 7
B	+ 7
C	+ 7
D	+ 7
E	+15
F	+15
G	+15
H	+15

⇨🕮 84

2) Without/With pressure (forced) lubrication
3) Please check thermal capacity of the gear unit
4) Reduced oil level with pressure (forced) lubrication

Note: The stated quantities are guide values. In the order-related documentation are the exact values.

Bevel Industrial Gear Unit
Mounting Positions & Oil Fill Quantities

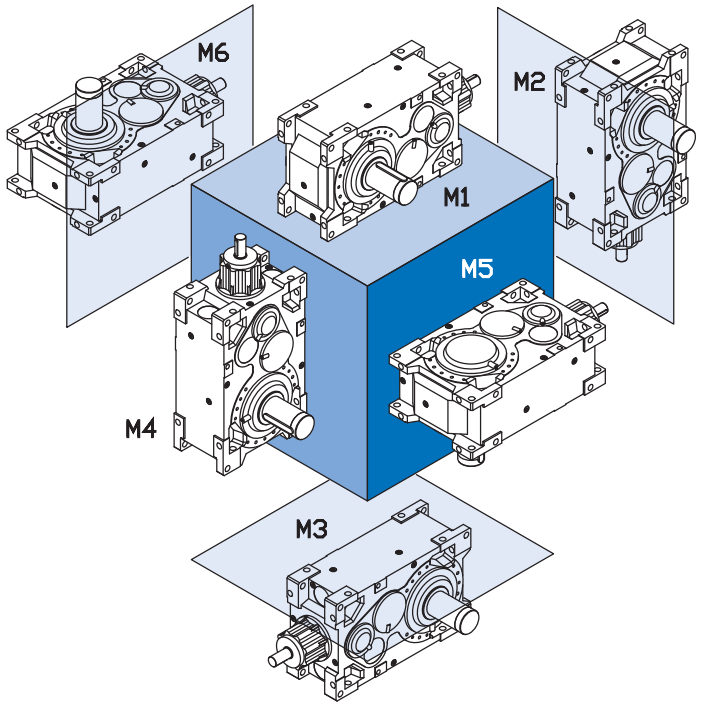

Unit Type	M1 Liters	M2 [2] Liters	M3 Liters	M4 [1] Liters	M5 [2] Liters	M6 [2] Liters	max [3] Liters
SK 5407 / 5507	24	34 / -	26	42 / -	40 / -	40 / -	53
SK 6407 / 6507	29	40 / -	32	48 / -	44 / -	44 / -	62
SK 7407 / 7507	38	47 / -	38	50 / -	49 / -	50 / -	64
SK 8407 / 8507	47	58 / -	47	62 / -	60 / -	62 / -	79
SK 9407 / 9507	61	75 / -	61	80 / -	78 / -	80 / -	102
SK 10407 / 10507	77	94 / -	77	101 / -	97 / -	101 / -	128
SK 11407 / 11507	112	137 / 57 [4]	112	147 / 40 [4]	142 / 45	147 / 45 [4]	187
SK 12407 / 12507	145	195 / 93 [4]	126	213 / 65 [4]	209 / 69	209 / 69 [4]	278
SK 13407 / 13507	168	270 / 121 [4]	168	304 / 73 [4]	282 / 95	282 / 95 [4]	377
SK 14407 / 14507	246	395 / 177 [4]	246	444 / 107 [4]	412 / 139	412 / 139 [4]	551
SK 15407 / 15507	382	439 / 188 [4]	359	474 / 125 [4]	429 / 170	436 / 163 [4]	599

Unit Type	R (Backstop) Liters	VL2/3/4/6 (Spread Bearing) Liters	VL5 (Extruder Bearing) Liters	WX (Auxillary Drive) Liters	OT (Oil Tank) Liters
SK 5407 / 5507	+1	+ 8	+ 8	+6	+ 7
SK 6407 / 6507	+1	+ 8	+ 8	+6	+ 7
SK 7407 / 7507	+1	+ 8	+ 8	+10	+ 7
SK 8407 / 8507	+1	+ 8	+ 8	+10	+ 7
SK 9407 / 9507	+2	+12	+12	+10	+ 7
SK 10407 / 10507	+2	+12	+12	+10	+ 7
SK 11407 / 11507	+2	+15	+15	+15	+15
SK 12407 / 12507	+3	+20	-	+15	+15
SK 13407 / 13507	+5	+25	-	+15	+15
SK 14407 / 14507	+6	+25	-	+15	+15
SK 15407 / 15507	+7	+30	-	+15	+15

CS1/CS2 (External Cooling)	Liters
A	+ 7
B	+ 7
C	+ 7
D	+ 7
E	+15
F	+15
G	+15
H	+15

⇨🕮 84

1) **Pressure (forced) lubrication is necessary for the bevel gear stages**
2) **Without / With pressure (forced) lubrication**
3) **Please check thermal capacity of the gear unit**
4) **Reduced oil level with pressure (forced) lubrication**

Note: The stated quantities are guide values. In the order-related documentation are the exact values.

SK...207 , SK...307
Weights

	V (Solid Shaft)		L (Double Solid Shaft)		A (Hollow Shaft)		AS (Hollow Shaft /Shrink Disc)	
	kg	lb	kg	lb	kg	lb	kg	lb
SK 5207	360	794	388	855	327	721	338	745
SK 5307	373	822	401	884	340	750	351	774
SK 6207	404	891	432	952	371	818	382	842
SK 6307	417	919	445	981	384	847	395	871
SK 7207	473	1043	530	1168	418	922	439	968
SK 7307	509	1122	570	1257	454	1001	477	1052
SK 8207	551	1215	608	1340	496	1093	516	1138
SK 8307	592	1305	654	1442	538	1186	560	1235
SK 9207	953	2101	1068	2355	824	1817	865	1907
SK 9307	1025	2260	1148	2531	895	1973	940	2072
SK 10207	1087	2396	1201	2648	957	2110	999	2202
SK 10307	1169	2577	1292	2848	1039	2291	1084	2390
SK 11207	1390	3064	1460	3219	1250	2756	1300	2866
SK 11307	1460	3219	1530	3373	1320	2910	1370	3020
SK 12207	2005	4420	2110	4652	1785	3935	1860	4101
SK 12307	2110	4652	2215	4883	1890	4167	1965	4332
SK 13207	2820	6217	2980	6570	2460	5423	2600	5732
SK 13307	3040	6702	3200	7055	2680	5908	2820	6217
SK 14207	3550	7828	3740	8247	3200	7056	3410	7519
SK 14307	3570	7872	3760	8291	3200	7100	3430	7563
SK 15207	4460	9833	4645	10240	4035	8896	4180	9215
SK 15307	4700	10362	4885	10770	4275	9425	4420	9744

	R (Backstop)		V + VL2/3 (Spread Bearing)		A + VL2/3 (Spread Bearing)		AS + VL2/3 (Spread Bearing)		F (Low Flange)		FK (High Flange)	
	kg	lb	kg	lb	kg	lb	kg	lb	kg	lb	kg	lb
SK 5207	+14	+31	+210	+463	+190	+419	+210	+463	+25	+55	+25	+55
SK 5307	+ 9	+20										
SK 6207	+14	+31	+210	+463	+190	+419	+210	+463	+25	+55	+25	+55
SK 6307	+ 9	+20										
SK 7207	+19	+41	+350	+772	+320	+705	+350	+772	+23	+51	+29	+64
SK 7307	+17	+37										
SK 8207	+19	+41	+350	+772	+320	+705	+350	+772	+29	+64	+35	+78
SK 8307	+17	+37										
SK 9207	+24	+53	+280	+617	+260	+573	+290	+639	+37	+82	+46	+101
SK 9307	+21	+46										
SK 10207	+24	+53	+280	+617	+260	+573	+290	+639	+47	+103	+58	+127
SK 10307	+21	+46										
SK 11207	+31	+68	+300	+661	+260	+573	+330	+727	+150	+331	+185	+408
SK 11307	+21	+46										
SK 12207	+54	+119	+380	+837	+330	+727	+390	+860	+205	+452	+260	+573
SK 12307	+31	+68										
SK 13207	+60	+132	+510	+1124	+430	+948	+520	+1146	+295	+650	+365	+805
SK 13307	+33	+72										
SK 14207	+56	+123	+540	+1190	+450	+992	+550	+1212	+350	+772	-	-
SK 14307	+56	+123										
SK 15207	+104	+229	+840	+1852	+730	+1609	+860	+1896	+400	+882	-	-
SK 15307	+61	+134										

CAUTIONS

The weight data is based on gear units without oil and add-ons. The actual weights can be supplied with the gear unit documentation.

	D (Torque Support)		ED (Elastic Torque Sup.)		WX (Auxillary Drive)		FAN (Fan)		H (AS) (Shrink Disc Cover)		CC (Int. Water Cooler)	
	kg	lb	kg	lb	kg	lb	kg	lb	kg	lb	kg	lb
SK 5207 SK 5307	+15	+33	+15	+33	+44	+97	+4	+9	+1	+2,2	+3	+7
SK 6207 SK 6307	+15	+33	+15	+33	+44	+97	+4	+9	+1	+2,2	+3	+7
SK 7207 SK 7307	+10	+22	+39	+86	+38	+84	+8,2	+18	+3,2	+7	+3,2	+7
SK 8207 SK 8307	+13	+29	+48	+106	+46	+101	+9,1	+20	+4,1	+9	+4,1	+9
SK 9207 SK 9307	+16	+35	+63	+139	+60	+132	+12	+26	+5,0	+11	+5,0	+11
SK 10207 SK 10307	+21	+46	+79	+174	+75	+165	+15	+33	+6,8	+15	+6.8	+15
SK 11207 SK 11307	+30	+66	+115	+254	+110	+243	+22	+49	+10	+22	+10	+22
SK 12207 SK 12307	+35	+77	+115	+254	+110	+243	+25	+55	+11	+24	+12	+26
SK 13207 SK 13307	+40	+88	+135	+298	+110	+243	+28	+62	+13	+29	+15	+33
SK 14207 SK 14307	+84	+187	+172	+381	+115	+253	+29	+65	+13	+29	+15	+33
SK 15207 SK 15307	+45	+99	+135	+298	+120	+265	+35	+77	+16	+35	+15	+33

	IEC 100		IEC 112		IEC 132		IEC 160		IEC 180		IEC 200		IEC 225		IEC 250		IEC 280		IEC 315		TN315		TN355	
	kg	lb	kg	lb	kg	lb	kg	lb	kg	lb	kg	lb	kg	lb	kg	lb	kg	lb	kg	lb	kg	lb	kg	lb
SK 5207 SK 5307	+65	+143	+65	+143	+67	+148	+70	+154	+70	+154	+72	+159	+80	+176	+96	+212	+96	+212	-		-		-	
SK 6207 SK 6307	+65	+143	+65	+143	+67	+148	+70	+154	+70	+154	+72	+159	+80	+176	+96	+212	+96	+212	-		-		-	
SK 7207 SK 7307	+13	+29	+13	+29	+169	+373	+74	+163	+74	+163	+70	+154	+79	+174	+94	+207	+94	+207	+115	+254	+137	+302	+166	+366
SK 8207 SK 8307	+13	+29	+13	+29	+169	+373	+74	+163	+74	+163	+70	+154	+79	+174	+94	+207	+94	+207	+115	+254	+137	+302	+166	+366
SK 9207 SK 9307	+13	+29	+13	+29	+169	+373	+76	+168	+76	+168	+72	+159	+80	+176	+96	+212	+96	+212	+117	+258	+139	+306	+168	+370
SK 10207 SK 10307	+13	+29	+13	+29	+169	+373	+76	+168	+76	+168	+72	+159	+80	+176	+96	+212	+96	+212	+117	+258	+139	+306	+168	+370
SK 11207 SK 11307	---	---	---	---	---	---	+142	+313	+142	+313	+138	+304	+147	+324	+162	+357	+162	+357	+183	+403	+205	+452	+235	+518
SK 12207 SK 12307	---	---	---	---	---	---	+168	+370	+168	+370	+163	+359	+172	+379	+188	+414	+188	+414	+209	+461	+231	+509	+260	+573
SK 13207 SK 13307	---	---	---	---	---	---	+184	+406	+184	+406	+180	+397	+189	+417	+204	+450	+204	+450	+225	+496	+247	+545	+277	+611
SK 14207 SK 14307	---	---	---	---	---	---	+227	+501	+227	+501	+177	+392	+232	+512	+247	+545	+247	+545	+268	+591	+290	+640	+320	+705
SK 15207 SK 15307	---	---	---	---	---	---	+230	+507	+230	+507	+226	+498	+235	+518	+250	+551	+250	+551	+271	+597	+293	+646	+322	+710

CAUTIONS

The weight data is based on gear units without oil and add-ons. The actual weights can be supplied with the gear unit documentation.

SK...407 , SK...507
Weights



	V (Solid Shaft)		L (Double Solid Shaft)		A (Hollow Shaft)		AS (Hollow Shaft /Shrink Disc)	
	kg	lb	kg	lb	kg	lb	kg	lb
SK 5407	400	882	428	944	367	809	378	833
SK 5507	395	871	423	933	362	798	373	822
SK 6407	444	979	472	1041	411	906	422	930
SK 6507	439	968	467	1030	406	895	417	919
SK 7407	542	1195	603	1329	487	1074	510	1124
SK 7507	534	1177	591	1303	479	1056	499	1100
SK 8407	620	1367	681	1501	565	1246	588	1296
SK 8507	617	1360	732	1614	488	1076	529	1166
SK 9407	1044	2302	1167	2573	914	2015	959	2114
SK 9507	1056	2328	1170	2579	926	2041	968	2134
SK 10407	1178	2597	1301	2868	1048	2310	1093	2410
SK 10507	1200	2646	1363	3005	1104	2434	1176	2593
SK 11407	1460	3219	1530	3373	1320	2910	1370	3020
SK 11507	1535	3384	1605	3538	1395	3075	1445	3186
SK 12407	2185	4817	2290	5049	1965	4332	2040	4497
SK 12507	2195	4839	2300	5071	1975	4354	2050	4519
SK 13407	2970	6548	3130	6900	2610	5754	2790	6151
SK 13507	3190	7033	3350	7385	2830	6239	2970	6548
SK 14407	3660	8070	3850	8490	33100	7290	3520	7761
SK 14507	3750	8269	3940	8690	3400	7498	3610	7960
SK 15407	4770	10516	4955	10924	4345	9579	4490	9899
SK 15507	4945	10902	5130	11310	4520	9965	4665	10285

	R (Backstop)		V + VL2/3 (Spread Bearing)		A + VL2/3 (Spread Bearing)		AS + VL2/3 (Spread Bearing)		F (Low Flange)		FK (High Flange)	
	kg	lb	kg	lb	kg	lb	kg	lb	kg	lb	kg	lb
SK 5407	+14	31	+210	+463	+190	+419	+210	+463	+25	+55	+25	+55
SK 5507	+ 9	20										
SK 6407	+14	31	+210	+463	+190	+419	+210	+463	+25	+55	+25	+55
SK 6507	+ 9	20										
SK 7407	+6,8	+15	+147	+324	+79	+174	+99	+218	+51	+112	+63	+139
SK 7507	+5,0	+11										
SK 8407	+8,2	+18	+181	+399	+97	+214	+122	+269	+63	+139	+78	+172
SK 8507	+5,9	+13										
SK 9407	+11	+24	+235	+518	+126	+278	+158	+348	+82	+181	+101	+223
SK 9507	+8,2	+18										
SK 10407	+14	+31	+294	+648	+157	+346	+198	+437	+103	+227	+127	+280
SK 10507	+10	+22										
SK 11407	+20	+44	+426	+939	+233	+514	+289	+637	+147	+324	+183	+403
SK 11507	+13	+29										
SK 12407	+33	+73	+602	+1327	+338	+745	+409	+902	+207	+456	+258	+569
SK 12507	+13	+29										
SK 13407	+33	+73	+292	+644	+291	+642	+292	+644	+293	+646	+365	+805
SK 13507	+13	+29										
SK 14407	+33	+73	+860	+1900	+500	+1100	+590	+1300	+350	+750	-	-
SK 14507	+13	+29										
SK 15407	+60	+132	+1427	+3146	+839	+1850	+969	+2136	+400	+882	-	-
SK 15507	+33	+73										

CAUTIONS

The weight data is based on gear units without oil and add-ons. The actual weights can be supplied with the gear unit documentation.

	D (Torque Support)		ED (Elastic Torque Sup.)		WX (Auxillary Drive)		FAN (Fan)		H (AS) (Shrink Disc Cover)		CC (Int. Water Cooler)	
	kg	lb	kg	lb	kg	lb	kg	lb	kg	lb	kg	lb
SK 5407 **SK 5507**	+15	+33	+15	+33	+44	+97	+4	+9	+1	+2,2	+3	+7
SK 6407 **SK 6507**	+15	+33	+15	+33	+44	+97	+4	+9	+1	+2,2	+3	+7
SK 7407 **SK 7507**	+10	+22	+39	86	+38	+84	+8,2	+18	+3,2	+7	+3,2	+7
SK 8407 **SK 8507**	+13	29	+48	106	+46	+101	+9,1	+20	+4,1	+9	+4,1	+9
SK 9407 **SK 9507**	+16	35	+63	139	+60	+132	+12	+26	+5,0	+11	+5,0	+11
SK 10407 **SK 10507**	+21	46	+79	174	+75	+165	+15	+33	+6,8	+15	+6,8	+15
SK 11407 **SK 11507**	+30	+66	+115	+254	+110	+243	+22	+49	+10	+22	+10	+22
SK 12407 **SK 12507**	+35	+77	+115	+254	+110	+243	+25	+55	+11	+24	+12	+26
SK 13407 **SK 13507**	+40	+88	+135	+298	+110	+243	+28	+62	+13	+29	+15	+33
SK 14407 **SK 14507**	+84	+187	+172	+381	+115	+253	+30	+65	+13	+29	+15	+33
SK 15407 **SK 15507**	+45	+99	+135	+298	+120	+265	+35	+77	+16	+35	+15	+33

	IEC 100		IEC 112		IEC 132		IEC 160		IEC 180		IEC 200		IEC 225		IEC 250		IEC 280		IEC 315		TN315		TN355	
	kg	lb	kg	lb	kg	lb	kg	lb	kg	lb	kg	lb	kg	lb	kg	lb	kg	lb	kg	lb	kg	lb	kg	lb
SK 5407	+72	+159	+72	+159	+74	+163	+77	+170	+77	+170	+79	+174	+87	+192	+103	+227	+103	+227	-	-	-	-	-	-
SK 5507	+61	+134	+61	+134	+63	+139	+66	+146	+66	+146	+68	+150	+76	+168	+92	+203	+92	+203	-	-	-	-	-	-
SK 6407	+72	+159	+72	+159	+74	+163	+77	+170	+77	+170	+79	+174	+87	+192	+103	+227	+103	+227	-	-	-	-	-	-
SK 6507	+61	+134	+61	+134	+63	+139	+66	+146	+66	+146	+68	+150	+76	+168	+92	+203	+92	+203	-	-	-	-	-	-
SK 7407	+13	+29	+13	+29	+69	+152	+91	+201	+91	+201	+87	+192	+95	+209	+111	+245	+111	+245	+132	291	+154	340	+183	403
SK 7507	+87	+192	+87	+192	+19	+42																		
SK 8407	+13	+29	+13	+29	+69	+152	+91	+201	+91	+201	+87	+192	+95	+209	+111	+245	+111	+245	+132	291	+154	340	+183	403
SK 8507	+87	+192	+87	+192	+19	+42																		
SK 9407	+13	+29	+13	+29	+69	+152	+91	+201	+91	+201	+87	+192	+95	+209	+111	+245	+111	+245	+132	291	+154	340	+183	403
SK 9507	+87	+192	+87	+192	+19	+42																		
SK 10407	+13	+29	+13	+29	+69	+152	+91	+201	+91	+201	+87	+192	+95	+209	+111	+245	+111	+245	+132	291	+154	340	+183	403
SK 10507	+87	+192	+87	+192	+19	+42																		
SK 11407	-	-	-	-	-	-	+170	+375	+170	+375	+166	+366	+175	+386	+190	+419	+190	+419	+211	+465	+233	+514	+263	+580
SK 11507	-	-	-	-	-	-	+144	+144	+144	+317	+140	+309	+149	+328	+164	+362	+164	+362	+185	+408	+207	+456	+237	+522
SK 12407	-	-	-	-	-	-	+222	+489	+222	+489	+218	+481	+226	+498	+242	+534	+242	+534	+263	+580	+285	+628	+314	+692
SK 12507	-	-	-	-	-	-	+176	+176	+176	+388	+172	+379	+181	+399	+196	+432	+196	+432	+217	+478	+239	+527	+269	+593
SK 13407	-	-	-	-	-	-	+267	+589	+267	+589	+262	+578	+271	+597	+287	+633	+287	+633	+308	+679	+330	+728	+359	+791
SK 13507	-	-	-	-	-	-	+216	+216	+216	+476	+212	+467	+221	+487	+236	+520	+236	+520	+257	+567	+279	+615	+308	+679
SK 14407	-	-	-	-	-	-	+267	+589	+267	+589	+262	+578	+271	+597	+287	+633	+287	+633	+308	+679	+330	+728	+359	+791
SK 14507	-	-	-	-	-	-	+216	+216	+216	+476	+212	+467	+221	+487	+236	+520	+236	+520	+257	+567	+279	+615	+308	+679
SK 15407	-	-	-	-	-	-	+310	+683	+310	+683	+306	+675	+315	+694	+330	+728	+330	+728	+351	+774	+373	+822	+402	+886
SK 15507	-	-	-	-	-	-	+240	+240	+240	+529	+236	+520	+244	+538	+260	+573	+260	+573	+281	+619	+303	+668	+332	+732

CAUTIONS

The weight data is based on gear units without oil and add-ons. The actual weights can be supplied with the gear unit documentation.

Solid & Hollow Shaft Tolerance Standards

Nominal Size ø Range		Hollow Shaft	Solid Shaft			
over (mm)	to (mm)	H7 (µm)	g6 (µm)	h6 (µm)	k6 (µm)	m6 (µm)
ø 40	ø 50	+25	-9	0	+18	+25
		0	-25	-16	+2	+9
ø 50	ø 65	+30	-10	0	+21	+30
		0	-29	-19	+2	+11
ø 65	ø 80	+30	-10	0	+21	+30
		0	-29	-19	+2	+11
ø 80	ø 100	+36	-12	0	+25	+35
		0	-34	-22	+3	+13
ø 100	ø 120	+36	-12	0	+25	+35
		0	-34	-22	+3	+13
ø 120	ø 140	+40	-14	0	+28	+40
		0	-39	-25	+3	+15
ø 140	ø 160	+40	-14	0	+28	+40
		0	-39	-25	+3	+15
ø 160	ø 180	+40	-14	0	+28	+40
		0	-39	-25	+3	+15
ø 180	ø 200	+46	-15	0	+33	+46
		0	-44	-29	+4	+17
ø 200	ø 225	+46	-15	0	+33	+46
		0	-44	-29	+4	+17
ø 225	ø 250	+46	-15	0	+33	+46
		0	-44	-29	+4	+17
ø 250	ø 280	+52	-17	0	+36	+52
		0	-49	-32	+4	+20
ø 280	ø 315	+52	-17	0	+36	+52
		0	-49	-32	+4	+20
ø 315	ø 355	+57	-18	0	+40	+57
		0	-54	-36	+4	+21

Standard tolerances: According to ISO 2768 - mk
According to: DIN 748 & ISO H7

⚠ IMPORTANT NOTE ⚠

Alternate inch dimensions and tolerances are available upon request.

Solid & Hollow Shaft & Key Tolerances

Solid Shaft Diameter Tolerance	[mm]
> ø 14 - ø 50	ISO k6
> ø 50	ISO m6

Shaft Tolerance According to: DIN 748

Solid Shaft Drill & Tap End - Threaded Holes	[mm]
= ø 13 - ø 16	M5
> ø 16 - ø 21	M6
> ø 21 - ø 24	M8
> ø 24 - ø 30	M10
> ø 30 - ø 38	M12
> ø 38 - ø 50	M16
> ø 50 - ø 85	M20
> ø 85 - ø 130	M24
> ø 130 - ø 155	M30
> ø 155 - ø 225	M36
> ø 225 - ø 320	M48

Solid Shaft Parallel Keys	[mm]
According to DIN 6885	

Keyed Hollow Bore Tolerances	[mm]
According to DIN 748 & ISO H7	

Splined Hollow Shaft Tolerance	[mm]
Splined Hub Section of DIN 5480 9H ⇨ 64	

Hollow Shaft Parallel Keys	[mm]
According to DIN 6885	

Customer Shaft & Other Tolerances

Customer Shafts	[mm]
Tolerance According to ISO h6	
L = Length of plug-in shaft	
DIN 5480 Recommended Fitting 8f	
Tolerance of plug-in shaft ISO h6 (Diameter <= 160 mm) Tolerance of plug-in shaft ISO g6 (Diameter > 160 mm)	

Customer Shaft Parallel Keys	[mm]
According to DIN 6885 Sheets 1 & 3	

Axle Height
Axle Height According to DIN 747

Flanges
Tolerance of bolt hole According to DIN 42 948
Tolerance of the pilot According to DIN 42 948 ≤ ø 230 mm according to ISO j6 > ø 230 mm according to ISO h6

Cast Surfaces
All cast surfaces are subject to minor variations due to the manu-facturing process.

DRIVESYSTEMS

Options

Option Overview List 58
Option Example Images 60
Shaft Options 64
Gear Unit Options 68
Thermal Options 80
Grain Endurance Package Option 86

Overview Options





Large Industrial Gearbox Options

Option Code	Description	Output Design	Output Options	Input Design	Add. Options	Size											⇨ 🕮
						SK 5.07	SK 6.07	SK 7.07	SK 8.07	SK 9.07	SK 10.07	SK 11.07	SK 12.07	SK 13.07	SK 14.07	SK 15.07	
A	Keyed hollow output shaft	X				✔	✔	✔	✔	✔	✔	✔	✔	✔	✔	✔	64
AS	Keyed hollow for shrink disc	X				✔	✔	✔	✔	✔	✔	✔	✔	✔	✔	✔	66
B	Fixing kit for hollow output shaft		X			✔	✔	✔	✔	✔	✔	✔	✔	✔	✔	✔	65
CC	Internal water cooler				X	✔	✔	✔	✔	✔	✔	✔	✔	✔	✔	✔	81
CS1	External oil / water cooler				X	✔	✔	✔	✔	✔	✔	✔	✔	✔	✔	✔	84
CS2	External oil / air cooler				X	✔	✔	✔	✔	✔	✔	✔	✔	✔	✔	✔	84
D	Torque support		X			✔	✔	✔	✔	✔	✔	✔	✔	✔	✔	✔	74
DRY	Spread Bearing Design "Drywell" with standard bearing		X			✔	✔	✔	✔	✔	✔	✔	✔	✔	✔	✔	64
EA	Hollow output shaft, with spline, DIN 5480	X				✔	✔	✔	✔	✔	✔	✔	✔	✔	✔	✔	64
ED	Elastic torque support		X			✔	✔	✔	✔	✔	✔	✔	✔	✔	✔	✔	74
EV	Splined solid output shaft, DIN 5480	X				✔	✔	✔	✔	✔	✔	✔	✔	✔	✔	✔	64
EW	Splined solid input shaft, DIN 5480			X		✔	✔	✔	✔	✔	✔	✔	✔	✔	✔	✔	64
F	Low output flange (B14 with threaded holes)		X			✔	✔	✔	✔	✔	✔	✔	✔	✔	✔	✔	70
FAN	Fan or Electric Fan				X	✔	✔	✔	✔	✔	✔	✔	✔	✔	✔	✔	85
FK	High output flange (B5 with through holes)		X			✔	✔	✔	✔	✔	✔	✔	✔	✔	✔	✔	70
F1	Input flange (SK .207 / SK .307)			X		✔	✔	✔	✔	✔	✔	✔	✔	✔	✔	✔	77
H/H66	Cover (contact protection) / IP66 Cover		X	X		✔	✔	✔	✔	✔	✔	✔	✔	✔	✔	✔	67
IEC	Adapter for fitting B5 IEC standard motors			X		✔	✔	✔	✔	✔	✔	✔	✔	✔	✔	✔	77
L	Double solid output shaft	X				✔	✔	✔	✔	✔	✔	✔	✔	✔	✔	✔	64
LC	Pressure Forced lubrication (Bearings)				X	-	-	1)	1)	1)	1)	✔	✔	✔	✔	✔	82
LCX	Pressure Forced lubrication with Drywell (Bearings & Gears)				X	-	-	1)	1)	1)	1)	1)	1)	1)	1)	1)	82
MC	Motor scoop				X	1)	1)	1)	1)	1)	1)	1)	1)	1)	1)	1)	77
MO	Monitoring devices & sensors				X	1)	1)	1)	1)	1)	1)	1)	1)	1)	1)	1)	78
MF	Motor base frame (options: see MF..)				X	✔	✔	✔	✔	✔	✔	✔	✔	✔	✔	✔	74
MFB	Base frame with brake				X	✔	✔	✔	✔	✔	✔	✔	✔	✔	✔	✔	75

[1] **on request**

Option Code	Description	Output Design	Output Options	Input Design	Add. Options	Size											
						SK 5.07	SK 6.07	SK 7.07	SK 8.07	SK 9.07	SK 10.07	SK 11.07	SK 12.07	SK 13.07	SK 14.07	SK 15.07	⇨🕮
MS	Motor Swing Base (options: see MS ..)				X	✓	✓	✓	✓	✓	✓	✓	✓	✓	✓	✓	74
MSB	Swing base with brake				X	✓	✓	✓	✓	✓	✓	✓	✓	✓	✓	✓	75
MFK	Base frame with elastic coupling				X	✓	✓	✓	✓	✓	✓	✓	✓	✓	✓	✓	75
MFT	Base frame with fluid coupling				X	✓	✓	✓	✓	✓	✓	✓	✓	✓	✓	✓	75
MSK	Swing base with elastic coupling				X	✓	✓	✓	✓	✓	✓	✓	✓	✓	✓	✓	75
MSKB	Swing base with elastic coupling and brake				X	✓	✓	✓	✓	✓	✓	✓	✓	✓	✓	✓	75
MST	Swing base with fluid coupling				X	✓	✓	✓	✓	✓	✓	✓	✓	✓	✓	✓	75
MFTB	Base frame with fluid coupling and brake				X	✓	✓	✓	✓	✓	✓	✓	✓	✓	✓	✓	75
MSTB	Swing base with fluid coupling and brake				X	✓	✓	✓	✓	✓	✓	✓	✓	✓	✓	✓	75
MT	Motor bracket				X	1)	1)	1)	1)	1)	1)	1)	1)	1)	1)	1)	78
NEMA	Adapter for fitting B5 NEMA C-flange standard motors			X		✓	✓	✓	✓	✓	✓	✓	✓	✓	✓	✓	77
OT	Oil tank				X	✓	✓	✓	✓	✓	✓	✓	✓	✓	✓	✓	80
OH	Oil heater				X	✓	✓	✓	✓	✓	✓	✓	✓	✓	✓	✓	80
R *	Backstop			X		✓ *	✓ *	✓ *	✓ *	✓ *	✓ *	✓	✓	✓	✓	✓	69
V	Solid output shaft	X				✓	✓	✓	✓	✓	✓	✓	✓	✓	✓	✓	64
VL2	Spread Bearing Design	X				✓	✓	✓	✓	✓	✓	✓	✓	✓	✓	✓	71
VL3	Spread Bearing Design with Oil Safe Dry Cavity	X				✓	✓	✓	✓	✓	✓	✓	✓	✓	✓	✓	71
VL4	Spread Bearing Design with Drywell	X				✓	✓	✓	✓	✓	✓	✓	✓	✓	✓	✓	72
VL5	Extruder Flange	X				✓	✓	✓	✓	✓	✓	✓	-	-	-	-	72
VL6	Spread Bearing Design with Drywell without Flange	X				✓	✓	✓	✓	✓	✓	✓	✓	✓	✓	✓	72
WX	Auxiliary drive			X		✓	✓	✓	✓	✓	✓	✓	✓	✓	✓	✓	78
W1 W2 * W3 *	W1/2/3 - number of Solid Shaft Input W3 - for type 407 and 507			X		✓ *	✓ *	✓ *	✓ *	✓ *	✓ *	✓	✓	✓	✓	✓	---
---	Brakes				X	✓	✓	✓	✓	✓	✓	✓	✓	✓	✓	✓	76
---	Couplings		X	X		✓	✓	✓	✓	✓	✓	✓	✓	✓	✓	✓	76
---	Paint Coatings				X	✓	✓	✓	✓	✓	✓	✓	✓	✓	✓	✓	79
---	Endurance Package				X	✓	✓	✓	✓	✓	✓	✓	✓	✓	✓	✓	86

[1] on request

* **R, W2, W3** - not available for all ratios

Examples Options

Examples

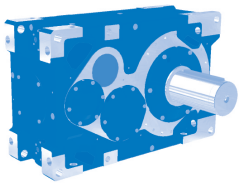

SK 13207 - V
Two-stage parallel gear unit
- with solid output shaft

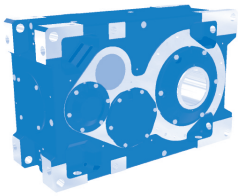

SK 13307 - A
Three-stage parallel gear unit
- with hollow output shaft

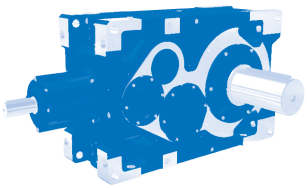

SK 13407 - V
Three-stage right-angle gear unit
- with solid output shaft

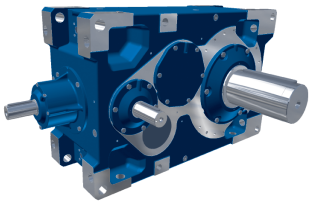

SK 13507 - V - W
Four-stage right-angle gear unit
- with solid output shaft
- with additional free input shaft



SK 13207 - V - F
Two-stage parallel gear unit
- with solid shaft and F flange on output

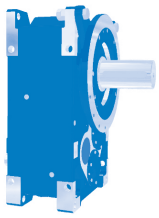

SK 13207 - V - F
Two-stage parallel gear unit
- with solid shaft and F flange on output

SK 13207 - A - ED

Two-stage parallel gear unit

- with hollow output shaft and elastic torque support



SK 13307 - A - D

Three-stage parallel gear unit

- with hollow output shaft and standard torque support



SK 13207 - V - OT

Two-stage parallel gear unit

- with solid output shaft and oil tank

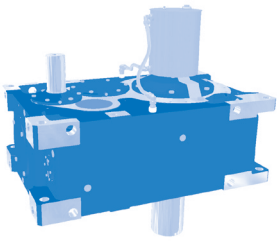

SK 13207 - V - VL2 - IEC

Two-stage parallel gear unit

- with solid output shaft, attached IEC motor, and "spread bearing design" with reinforced bearings

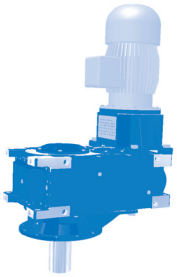

SK 13307 - ASH - VL3 - NEMA

Three-stage parallel gear unit

- with hollow output shaft with shrink disc & cover, "spread bearing design" with "Drywell" and attached NEMA motor

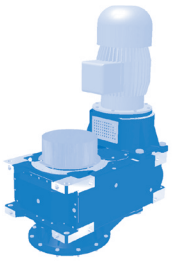

SK 13307 - V - VL6

Three-stage parallel gear unit

- with solid output shaft and "spread bearing design" with "Drywell" and bolt on cover



Examples



SK 13207 - V - FK
Two-stage right-angle gear unit
- with solid shaft and high flange on output

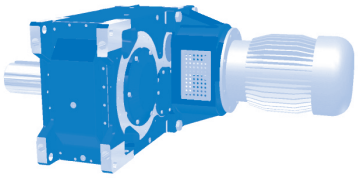

SK 13307 - V - IEC
Three-stage right-angle unit
- with solid output shaft, and an attached IEC motor

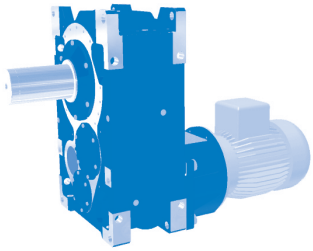

SK 13207 - V - NEMA
Two-stage parallel unit
- with solid output shaft, and an attached NEMA motor

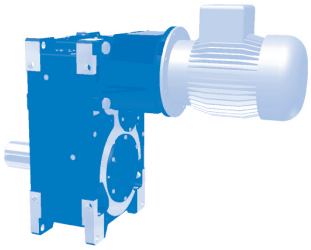

SK 13307 - V - IEC
Three-stage parallel gear unit
- with solid output shaft, and an attached IEC motor

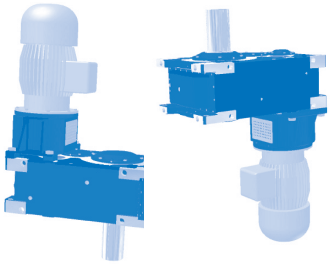

SK 13207 - V - NEMA
Two-stage parallel gear unit
- with solid output shaft, and an attached NEMA motor



SK 13407 - V - FAN
Three-stage right angle gear unit
- with solid output shaft
- with attached fan and protective cover

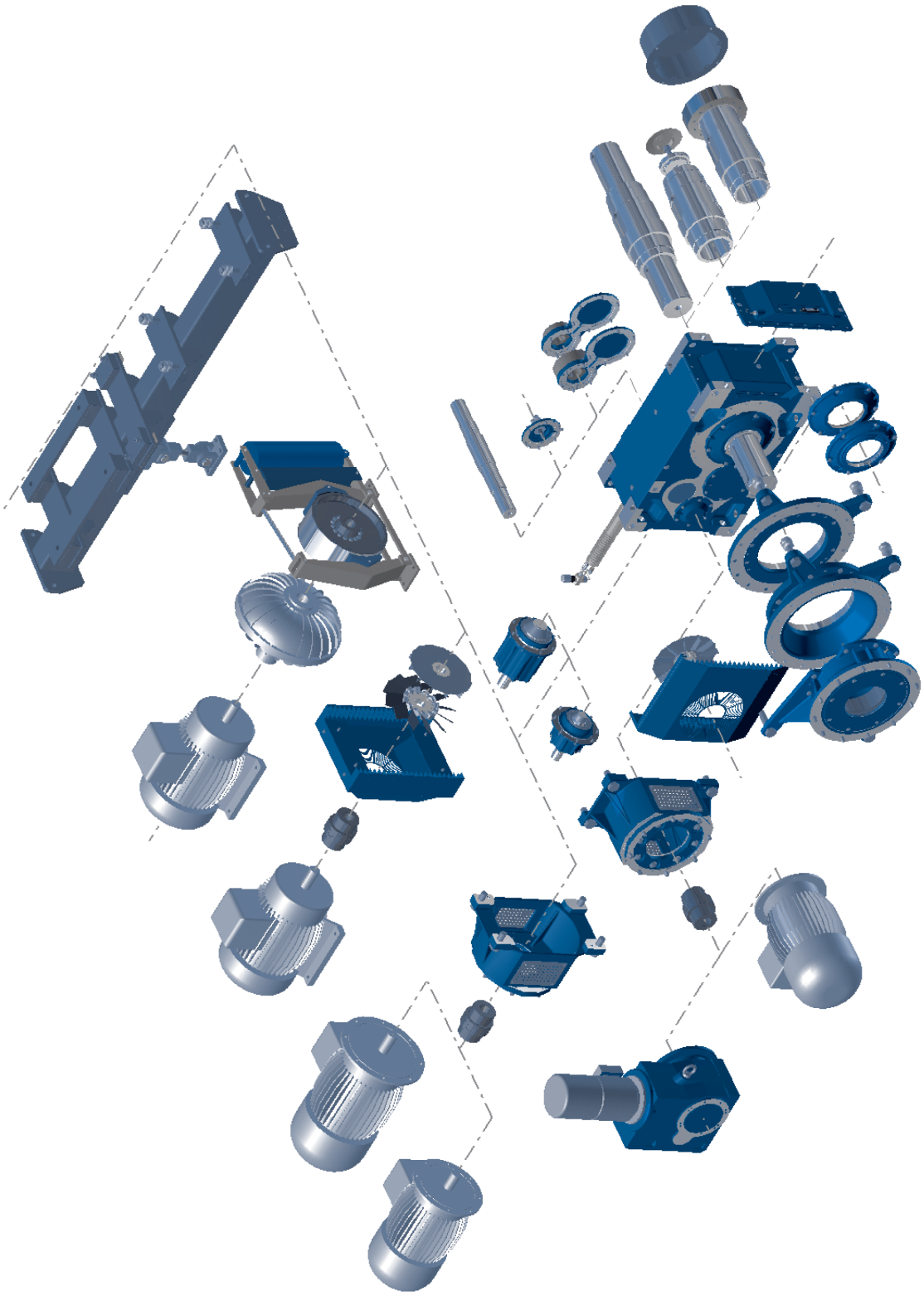

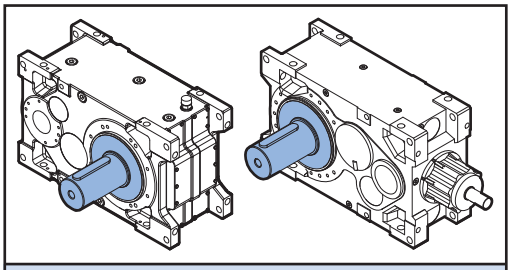

Parallel & Right Angle Solid Shaft Examples

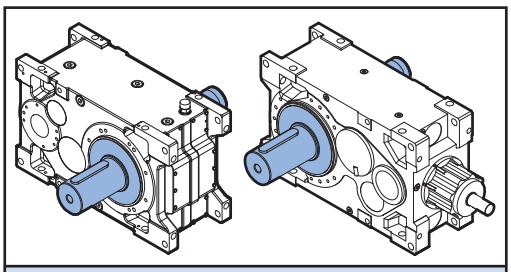

Parallel & Right Angle Double Solid Shaft Examples

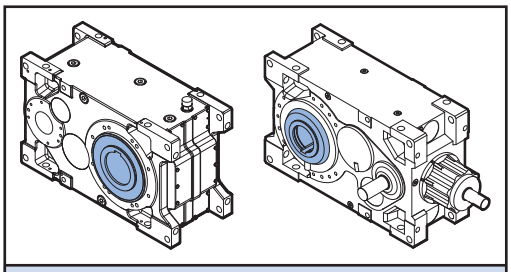

Parallel & Right Angle Keyed Hollow Shaft Examples

Shaft Options

Solid Output Shaft (Blank or V)

NORD's standard keyed solid shafts include a centered threaded hole. When installing drive elements such as sprockets, coupling hubs, pulleys, etc. the threaded hole and a suitable assembly device can be used to assemble the drive element. Shafts are available as inch or metric versions.

Double Solid Output Shaft (L)

The double solid shaft end is projected out both sides of the speed reducer. This option is commonly used to transfer torque out of both sides of the reducer or to mount a speed-monitoring device such as an encoder on one of the shaft ends. If you need the keyways to be alligned you must specify with NORD upon ordering.

Keyed Hollow Output Shaft (A)

NORD's standard keyed hollow shafts feature standard keyway dimensions and are available in both inch and metric designs. Many NORD reducers offer a variety of hollow shaft diameters.

Hollow Output Shaft with Spline (EA)

Hollow shafts with an involuted metric spline profile, according to DIN 5480, are available for some NORD hollow shaft reducers. NORD spline shafts are commonly used for crane travel drive applications.

Solid Output Shaft with Spline (EV)

Solid output shafts with an involuted metric spline profile, according to DIN 5480, are available for some reducers.

Solid Input Shaft with Spline (EW)

Solid output shafts with an involuted metric spline profile, according to DIN 5480, are available for some reducers.

Fixing Kits for Hollow Shafts (B)

Due to the slight oscillations inherent in any rotating shaft, NORD offers an optional “fixing kit”. This is a method to prevent the reducer from “walking out” of position. The kit includes all of the necessary parts to secure the shaft in the axial direction by using a tapped hole in the end of the mating male shaft.

The fixing kits are used for assembling, dismantling and axial fixing to the customer’s shaft. The customer’s shaft may be with or without a shoulder.

The threaded rod, assembly nut and dismantling screw are not provided with the fixing kit option.

Specifications for use:

- The solid shaft that is used must have a tap according to our factory standards.
- Space must be available to fit the fixing kit. The permissible shaft dimensions can be found on the hollow shaft dimension pages for each individual gearbox size on pages ⇨📖156 & 244.

Installation (fixing)

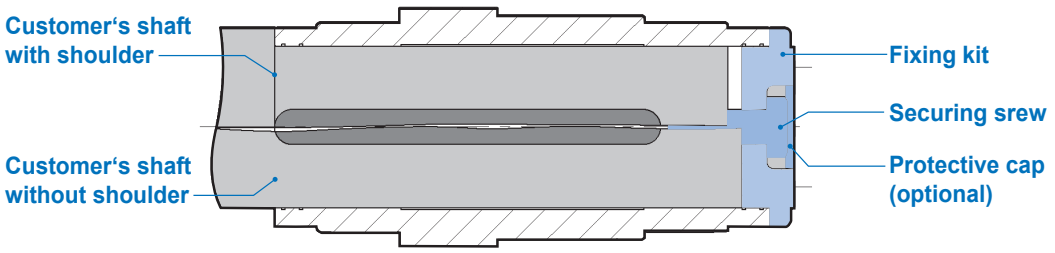

Assembly

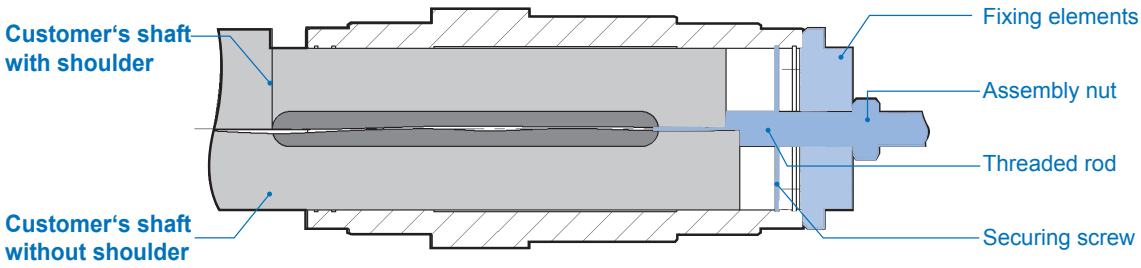

Dismantling

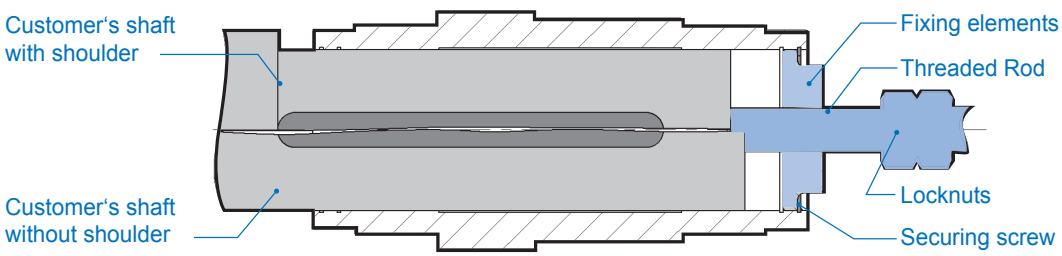

Hollow Shaft with Shrink disc (AS)

For gearbox versions with a hollow output shaft, the use of a shrink disc is advised. The customer's shaft length that may be inserted into the hollow shaft of the gearbox can be found ⇨📖 157 & 245.

The diameter of the customer shaft should be according to ISO standard g_6 (dk>160mm) & h_6 (dk ≤ 160 mm). The material of the customer's insert must have a yield strength ($\mathbf{R_e}$) of at least: **52,260 psi (360 N/mm²)** Due to the clamping force, this will ensure that no permanent deformation occurs.

$\mathbf{T_{2max}}$ = Maximium permissible drive torque

s = Safety factor of the shrink disc for fitclass g_6 or h_6 with T_{2max}

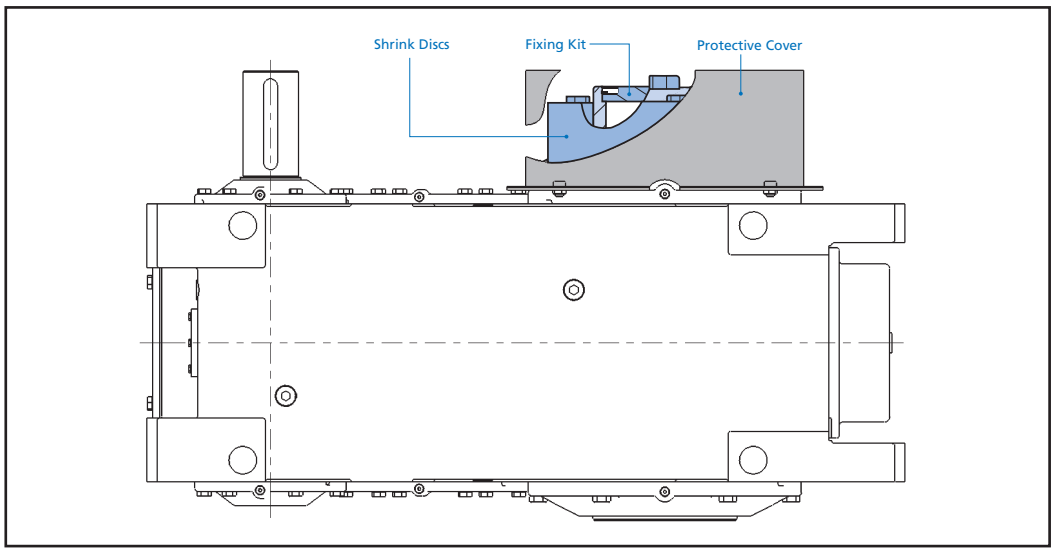

Gearbox	Size	Shrink disc T_{2max} [Nm]	Shrink disc T_{2max} [lb-in]	Shrink disc s	Clamping screw Number x Size
SK 5.07 ASH	130	15.000	132800	2,4	14 x M12
SK 6.07 ASH	130	20.000	177000	1,8	14 x M12
SK 7.07 ASH	160	27.000	239000	2,0	12 x M16
SK 8.07 ASH	160	31.000	274400	1,9	12 x M16
SK 9.07 ASH	190	46.000	407100	2,3	16 x M16
SK 10.07 ASH	190	53.000	469100	1,9	16 x M16
SK 11.07 ASH	220	77.000	681500	2,3	16 x M20
SK 12.07 ASH	240	112.000	991300	2,1	18 x M20
SK 13.07 ASH	280	152.000	1345300	2,7	22 x M24
SK 14.07 ASH	280	212.000	1876400	2,0	22 x M24
SK 15.07 ASH	300	254.000	2248100	2,0	20 x M24
SK 15.07 ASH	340	282.000	2495900	2,0	20 x M24

Hollow Shaft with Shrink disc (AS)

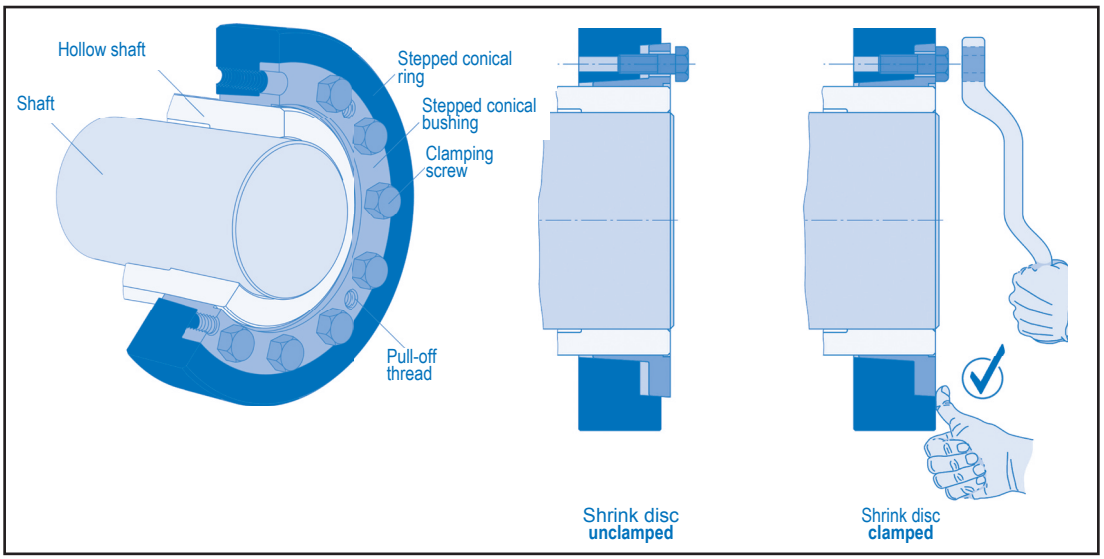

Image source: Fa. RINGSPANN GmbH

Shaft Cover / IP66 Shaft Cover (H/H66)

The Shaft cover provides protection from rotating parts and the shrink disc when applicable.

The IP66 shaft cover provides the same protection from the shrink disc and rotating parts as well as being rated IP 66, which means that it is dust tight and capable of protecting against high pressure water jets.

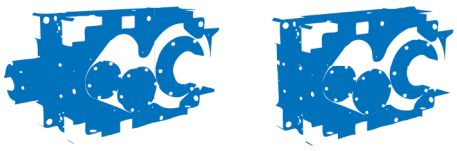

Backstops (R)

Optional backstops, which allow rotation in only one direction and block the other direction of rotation may be supplied. All backstops are mounted externally and are able to be changed without disassembly of the gear unit.

The lubrication of the backstop is provided by the oil from the gear reducer. The backstops lift off due to centrifugal force above a certain lift-off speed (see table) and are then free of friction.

Gear Units	Nominal Ratio i_N	Nominal Input Speed n_1 [rpm]
SK 5207	7,1 - 25	430
SK 5307	28 - 315	670
SK 5407	18 - 25	671
	28 - 50	1088
	56 - 100	1759
SK 5507	112 - 400	2740
SK 6207	8,0 - 28	430
SK 6307	31,5 - 355	670
SK 6407	20,0 - 25	671
	28,0 - 50	1088
	56,0 - 112	1759
SK 6507	125 - 445	2740
SK 7207	7,1 - 25	400
SK 7307	28,0 - 315	430
SK 7407	15,0 - 25	624
	28,0 - 50	1012
	56,0 - 100	1636
SK 7507	112 - 400	1759
SK 8207	8,0 - 28	400
SK 8307	32,5 - 355	430
SK 8407	20,0 - 28	624
	31,5 - 56	1012
	63,0 - 112	1636
SK 8507	125 - 450	1759
SK 9207	7,1 - 25	320
SK 9307	28,0 - 355	400
SK 9407	18,0 - 25	499
	28,0 - 50	810
	56,0 - 100	1309
SK 9507	112 - 400	1636
SK 10207	8,0 - 28	320
SK 10307	31,5 - 400	400
SK 10407	20,0 - 28	499
	31,5 - 56	810
	63,0 - 112	1309
SK 10507	125 - 450	1636

Gear Units	Nominal Ratio i_N	Nominal Input Speed n_1 [rpm]
SK 11207	5,6 - 20	320
SK 11307	31,5 - 112	320
	22,4 - 28	400
SK 11407	12,6 - 28	448
	31,5 - 45	698
	50,0 - 71	1136
SK 11507	112 - 100	1136
	80,0 - 400	1420
SK 12207	5,6 - 20	250
SK 12307	22,4 - 112	320
SK 12407	12,5 - 28	352
	31,5 45	544
	50 71	888
SK 12507	80,0 - 400	1136
SK 13207	5,6 - 20	250
SK 13307	22,4 - 112	320
SK 13407	12,5 - 28	352
	31,5 - 45	544
	50,0 - 71	886
SK 13507	80,0 - 400	1136
SK 14207	7,1 - 25	240
SK 14307	28,0 - 140	250
SK 14407	14,0 - 40	373
	45,0 - 56	522
	63,0 - 90	851
SK 14507	100 - 400	886
SK 15207	5,6 - 20	220
SK 15307	22,4 - 112	250
SK 15407	12,5 - 28	310
	31,5 - 45	479
	50 - 71	781
SK 15507	80,0 - 400	886

⚠ IMPORTANT NOTE ⚠

Please contact NORD if the motor input speed is greater than 1800 rpm or less than 1000 rpm (⇨🕮17, 45)

Backstops (R) (rotation)

When ordering the backstop option, the direction of rotation must be specified. The direction of rotation is based upon looking directly at the drive shaft and specifying which direction you want it to turn.

CW = Clockwise direction of rotation, Right-hand rotation
CCW = Counterclockwise direction of rotation, Left-hand rotation

The position of the output shaft and the side on which the backstop is installed determine the direction of rotation. The direction of view for declaring the rotation direction is always towards the output shaft that is being specified.

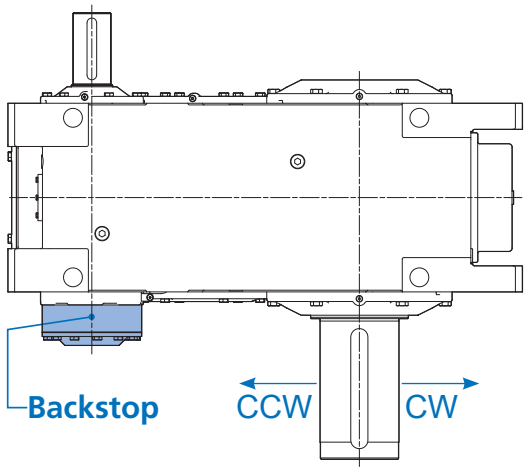

⚠ IMPORTANT NOTE ⚠

The backstops are designed for double the rated gearbox torque (T_{2max}) with reference to the output shaft. If greater safety ratings are required, please consult NORD.

⚠ WARNING ⚠

Danger of failure and distruction. Check the direction of rotation of the motor and the gearbox before starting up your application. Arrows on the gearbox indicate the direction of rotation.

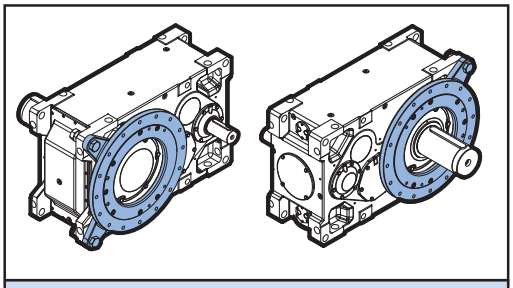

Low output flange (F) (B14 Flange with threaded holes)

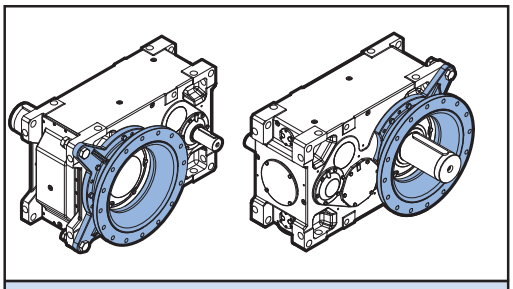

High output flange (FK) (B5 Flange with through holes)

Output flanges (F, FK)

In addition to the six mounting surfaces of the housing, the gearbox may be equipped with various mounting flanges. The output flange is designed to accommodate mounting a gearbox with an attached motor. However, the permissible motor weights (⇨🕮 77) must not be exceeded.

Please contact us if you wish to use the mounting flange in order to attach to parts of an application process. In this case, technical clarification is essential.

The following types of output flanges are available:

- Low output flange (F)
- High output flange(FK)
- VL2 / VL3 flange (Reinforced Output Design)
- VL4 flange (Reinforced Output Design)
- VL5 extruder flange
- VL6 Housing (Reinforced Output Design)

Low Output Flange (F)

The F option is a B14 output flange for the connection to customers application. It is used if threaded holes are requested.

High Output Flange (FK)

The option FK is a B5 output flange for the connection to customers application. It is used if through holes are requested.

Reinforced output design (VL2 / VL3 / VL4 / VL6)

The reinforced output design is specifically designed for high radial loads as well as keeping the bearing cavity dry and without contamination. There are different levels of protection that NORD offers.

Spread Bearing Design (VL2)

The VL2 option is specifically designed for agitator or mixer applications requiring increased bearing load carrying capacities.

NORD offers reinforced output shaft bearings with increased bearing distance. the lower bearing is a oversized, double row spherical bearing, which absorbs high overhung and thrust loads, while providing a longer bearing service life. The spherical roller bearing is especially useful in compensating for alignment errors in long agitator shafts. Included with the VL2 design is a grease fitting for the lower bearing and a removeable plug to allow excess grease to purge from the bearing cavity.

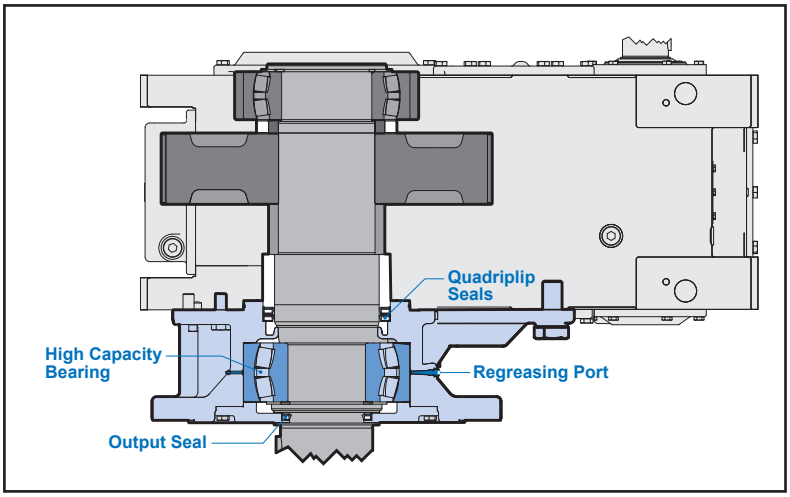

Spread Bearing Design with Oil Safe Dry Cavity (VL3)

The VL3 dry cavity design adds additional oil leak protective measures to the VL2 spread bearing design. If in any case oil does leak past the reducer seals, it would flow down to the oil slinger mounted onto the shaft. As the shaft rotates, the oil will sling off into the dry cavity and is detected by an oil sensor.

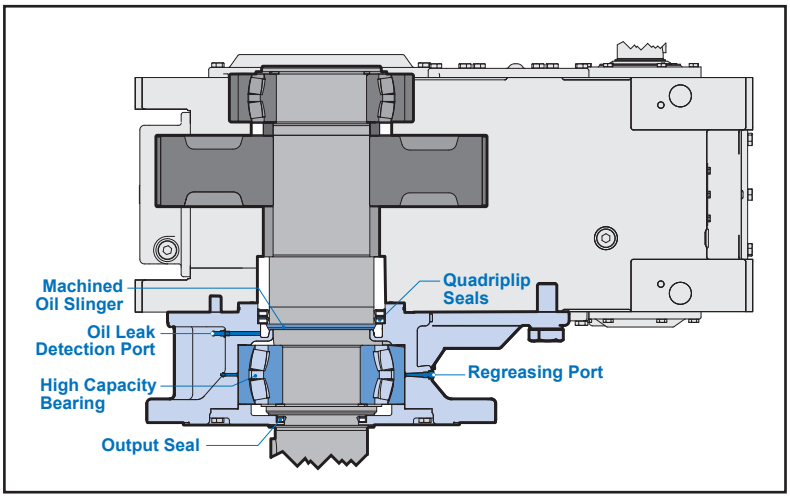

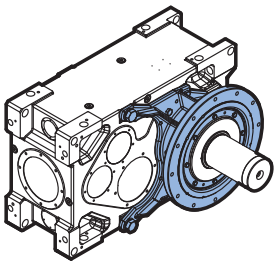

Spread Bearing Design (VL2)

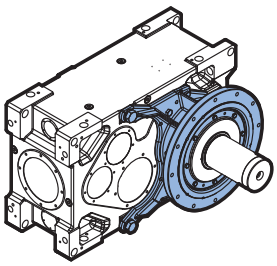

Spread Bearing Design with oil safe dry cavity (VL3

IMPORTANT NOTE

Calculation of the bearing life on request.

For bearing life calculation we require the following data:

P_1	Input power	[kW/Hp]
n_2	Output speed	[rpm]
F_A	Axial force (thrust)	[kN/lb]
F_R	Radial force	[kN/lb]
	Distance of the point of action of the radial force from the flange support	[mm]
	Required bearing life	[mm]

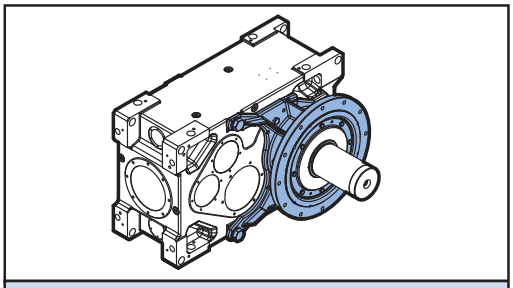

Spread Bearing Design with Drywell (VL4)

Spread Bearing Design with „Drywell“ (VL4)

The VL4 Drywell design adds additional oil leak protective measures to the VL3 design. The quadrilip seals are replaced with a standpipe that has additional sealing that includes a V-ring seal and multiple O ring seals. All of the additional benefits included in the VL3 option are also included in this design.

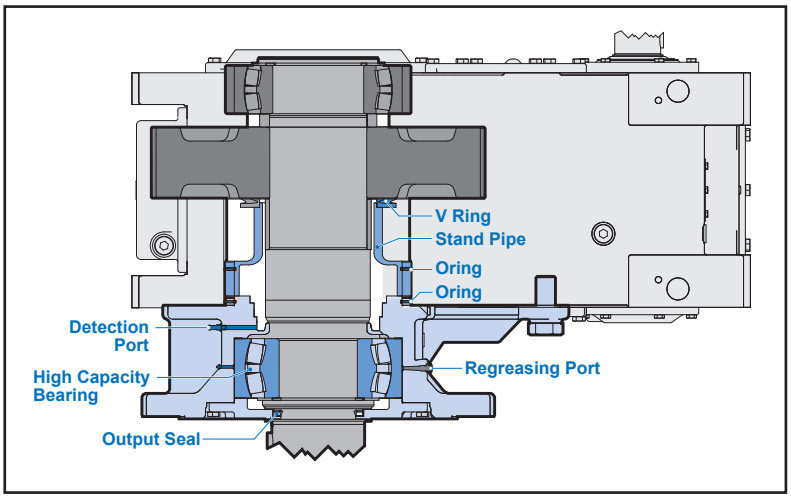

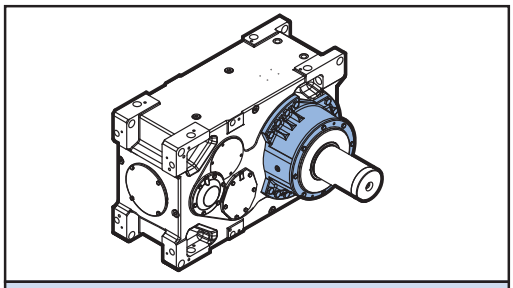

Spread Bearing Design, with Drywell, without Flange (VL6)

Spread Bearing Design with „Drywell“ without flange (VL6)

The VL6 otion includes all of the internal VL4 design elements but is housed by a bolt on non-flanged cover:

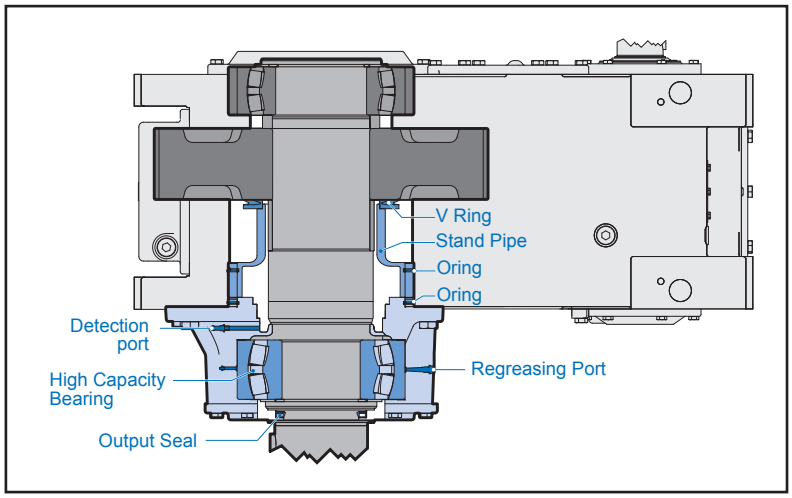

⚠ IMPORTANT NOTE ⚠

Calculation of the bearing life on request.

For bearing life calculation we require the following data:

P_1	Input power	[kW/hp]
n_2	Output speed	[1/min]
F_A	Axial force (thrust)	[kN/lb]
F_R	Radial force	[kN/lb]
	Distance of the point of action of the radial force from the flange support	[mm]
	Required bearing life	[mm]

Extruder flange with axial thrust bearings (VL5)

The VL5 extruder design combines customer-specific flange and hollow shaft dimensions and tolerances with 2 or 3 different standardised axial bearing dimensions per size in order to economically cater for the specific requirements of the application.

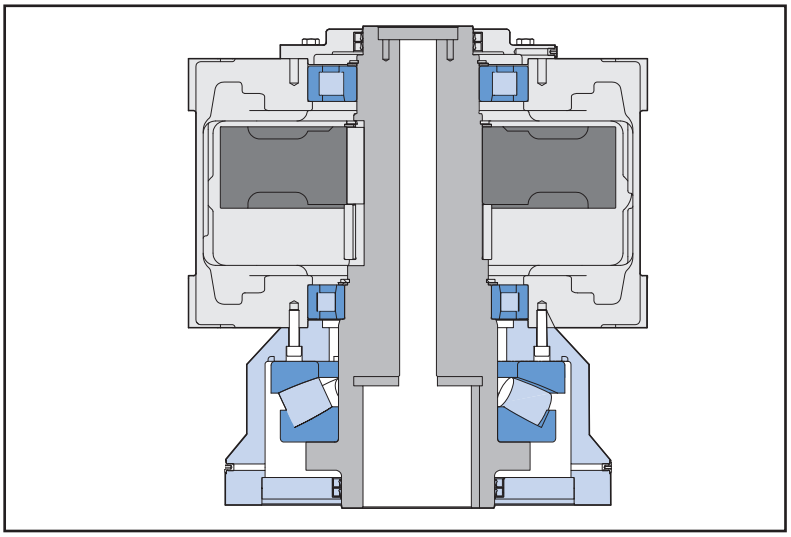

This option is available in 7 different sizes for torque ranges between 15 and 75 kNm (MAXXDRIVE sizes SK 5.07 - SK 11.07).

We require the following data for the selection of the most suitable set of bearings:

- Axial force or diameter and pressure
- Output speed
- Flange dimensions (hole pattern, centring collar)
- Output shaft dimensions
- Expected service live (primarily for axial bearings)

Note:

All the aforementioned flange variants are also available with taper roller bearings (KL2 - KL4, KL6). The selection is made according to the specific conditions of the application..

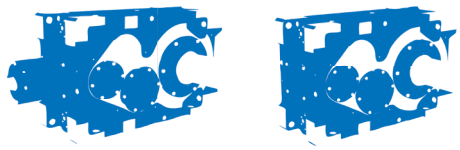

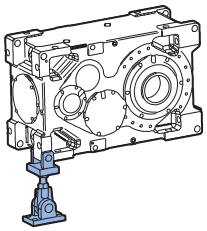

Standard Torque Support (D)

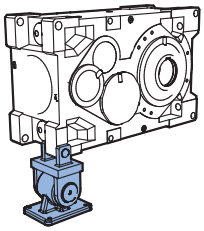

Elastic Torque Support (ED)

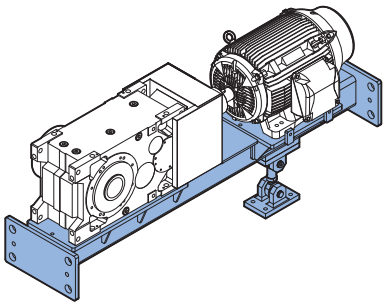

Motor Swing Base (MS) or Base Frame (MF)

Torque Support (D) (ED)

For shaft mounted versions of our hollow shaft gearboxes, torque supports are available. In addition to a simple torque support (D), NORD DRIVESYSTEMS offers a torque support with an integral elastic bushing (ED), which has better damping characteristics (vibration damping).

The torque support should be assembled on the machinery side, in order to keep the bending moment on the machinery shaft low. Loading under tension or compression and installation upwards or downwards are permissible. The torque support may only be installed closest to the input side, otherwise the permissible loading of the gear unit will be exceeded.

Preloading the torque support during installation or operation must be avoided, otherwise the life-span of the drive shaft bearings may be reduced. Torque supports are not suitable for the transmission of radial forces, therefore may only be used in direct-coupled applications that cannot transmit the specified radial forces.

⚠ WARNING ⚠

The output torque must be limited to the values shown in the table below. If greater torque ratings are necessary, please consult NORD.

Gear units	M_{2max} [Nm]		M_{2max} [lb-in x 1000]]	
	Typ D	Typ ED	Typ D	Typ ED
SK 5.07	15.000	15.000	133	133
SK 6.07	20.000	20.000	177	177
SK 7.07	25.000	23.500	221	208
SK 8.07	31.000	25.000	274	221
SK 9.07	40.000	42.000	354	372
SK 10.07	41.000	46.500	363	412
SK 11.07	66.000	66.000	584	584
SK 12.07	101.000	74.000	894	655
SK 13.07	131.000	150.000	1,159	1,328
SK 14.07	170.000	190.000	1,505	1,682
SK 15.07	240.000	240.000	2,124	2,124

Motor Swing Base (MS)

The motor swing base is designed specifically for use with right-angle shaft mounted gear unit where the gearbox and motor are mounted on a common base frame. The torque is taken up via torque support or torque reaction arm.

Optional components (can be combined):

- Elastic coupling, fluid coupling
- Drum brake, disc brake
- Radial / Axial fan
- Auxiliary drive
  (with freewheel coupling, backstop, motor brake , etc.)
- Torque support, attachment plate

Motor Base Frame (MF)

Motor base frames (or motor bases) are similar to a motor swing base except the entire base frame is intended to be foot mounted to the supporting machine structure.

Swing Base with Brake (MSB) & Base Frame with Brake (MFB)

A motor swing base or base frame can be supplied with an optional disc or drum brakes installed between the motor and the gear unit.

For applications with a relatively high external moment of inertia (maf > 2), as often the case with travelling drives, slewing gear, turntables, gate drives, agitators and surface ventilators, it is recommended that a brake torque be selected that is no greater than 1.2 times the nominal torque of the motor.

When a higher brake torque is required this must be considered in the selection of the gear unit. Please consult NORD DRIVESYSTEMS. Also contact NORD DRIVESYSTEMS if an output-side brake is necessary.

Motor Swing Base and Motor Base Options (MSK, MST, MFK, MFT)

Both the motor swing base and the motor base are commonly supplied with either an elastic input coupling or a fluid coupling. In addition, many drive packages require a brake between the motor and the input-side of the reducer. The most common motor swing base or motor base options may be specified as follows:

Description	Option Code
Swing base with elastic coupling	**MSK**
Motor base with elastic coupling	**MFK**
Swing base with elastic coupling and brake	**MSKB**
Motor base with elastic coupling and brake	**MFKB**
Swing base with fluid coupling	**MST**
Motor base with fluid coupling	**MFT**
Swing base with fluid coupling and brake	**MSTB**
Motor base with fluid coupling and brake	**MFTB**

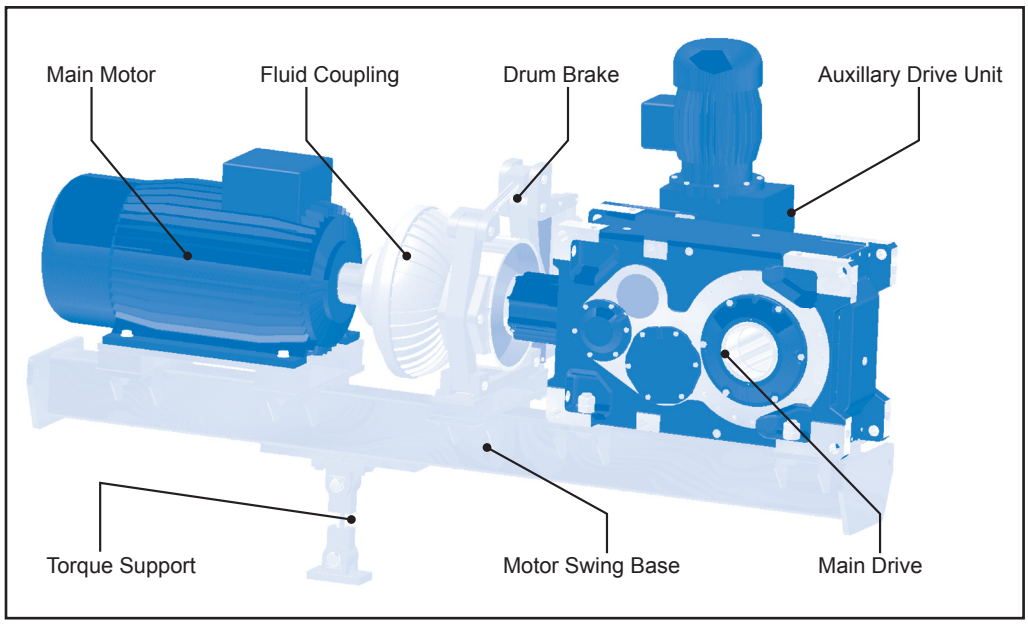

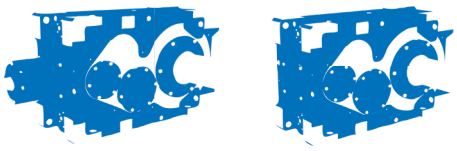

Couplings (input and output)

Upon request, NORD DRIVESYSTEMS can provide a variety of coupling types and styles. In addition to various flexible, fail-safe couplings (Jaw coupling: e.g Rotex, Polynorm / Bolt coupling: e.g. Revolex KX-D) soft-start couplings (fluid couplings), and safety couplings (e.g. Autogard) can be supplied. As output couplings, short length elastic fail-safe bolt couplings can be supplied, as well as gear couplings which can also span greater distances. Please contact us if you have special requirements for input or output couplings.

- Common input couplings include: flexible, jaw-style, fluid couplings (to help control start-up), safety couplings or torque-overload couplings.
- Common output couplings include: elastic bolt couplings (for shorter span lengths), flange couplings or gear couplings (for larger span lengths).

Brakes

For motor swing bases and base frames optional disc or drum brakes are available, which can be installed between the motor and the gear unit. However, there is also the possibility of installing the disc brake on the free end of an input shaft. For applications with a relatively high external moment of inertia (maf > 2), such as is often the case with travelling drives, slewing gear, turntables, gate drives, agitators and surface ventilators it is recommended that a brake torque is selected, which is no greater than 1.2 times the nominal torque of the motor.

If higher brake torques are to be used, this should be taken into account in the selection of the gear unit. In this case, please contact us. Please contact us if output brakes are necessary. (Disc brakes, drum brakes)

Input Flange (F1)

Gear units with input flange and solid-shaft input can be supplied to allow for additional drive components to be attached to the input (high speed) side of the reducer. It is possible to use the input flange to install an accessory such as a disc brake or a torque overload or to install an additional gear reduction mechanism to the main reducer.

Direct motor attachments & IEC / NEMA adapters

Input adapters according to NEMA/IEC and Transnorm standards can be supplied. The maximum input power stated in the power and ratio tables cannot be exceeded.

For higher speeds than those stated in the power and ratio tables, special measures may be necessary. In these situations please contact NORD DRIVESYSTEMS Gear.

Motor attached to IEC / NEMA adapter cylinders with an elastic coupling

Right Angle Drives

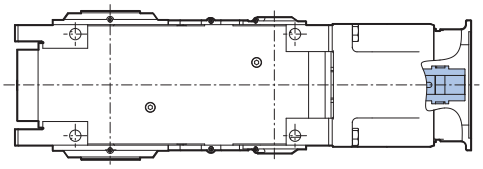

Parallel Drives

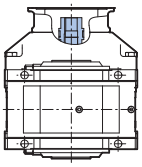

Maximum permissible motor weight paired with an elastic coupling according to size										
IEC	100	112	132	160	180	200	225	250	280	315
NEMA	143/145 TC	182/184 TC	213/215 TC	254/286 TC	284/286 TC	324/326 TC	364/365 TC	404/405 TC	444/445 C	447/449 TC
lb	130	180	220	440	550	770	1100	1540	2200	3310
kg	60	80	100	200	250	350	500	700	1000	1500
„X“ [mm]	190	175	190	250	300	330	380	400	465	610

If the centroidal distance is larger than "X", the maximum permissible weight must be linearly reduced. The maximum weight cannot be increased, even if the "X" d mension is smaller. Please refer to illustration on the left.

If the motor weight is greater than the gearbox weight please contact NORD.

Motor Scoop (MC)

The motor scoop provides a “soft” mounting” for a standard NEMA T-frame or IEC B3 footed motor. The motor bracket or scoop is mounted to the gear unit in a cantilevered fashion to allow direct-coupling of the motor to the reducer’s input shaft. Motor scoops can have the tendency to deflect or twist during reducer operation and in some cases vibrations may result that exceed those considered acceptable for rigid “hard” mounted machinery. The motor size, weight, location, and starting torque all need to be considered in order to provide an adequate design.

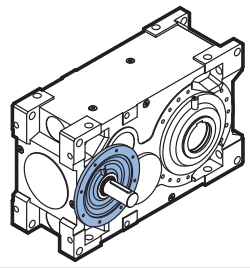

Input Flange (F1)

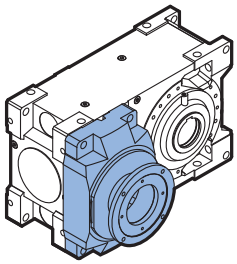

Parallel Gear Unit and NEMA / IEC

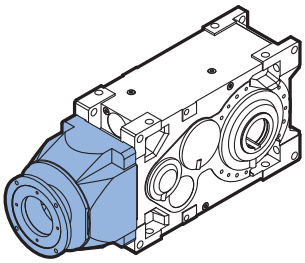

Right-Angle Gear Unit and NEMA / IEC

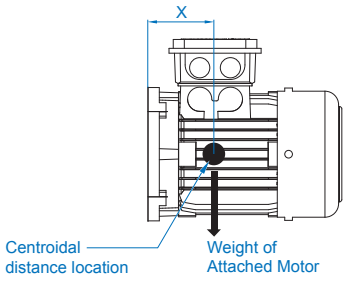

Definition of center of gravity distance "X"

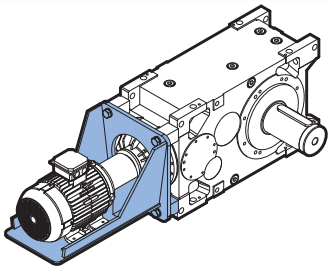

Motor Scoop (MC)

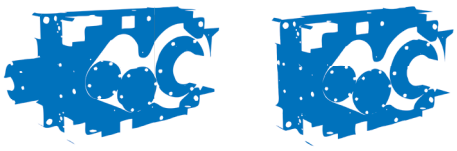

Motor Bracket (MT)

The motor bracket provides a convenient way to mount a standard NEMA T-frame or IEC B3 footed motor with belt drive to the reducer. Often the motor bracket is mounted “over-the-top” of the reducer and referred to as a “top-mount” or “piggyback” motor bracket.

The motor is belt driven to the reducer input shaft using pulleys mounted to both the motor shaft and the reducer shaft. When mounted to the gear unit, the entire assembly is adjustable in order to allow proper tensioning of the external belt drive assembly. The motor bracket can be used when installation space is restricted or it may be used to change the total ratio of the mechanical drive assembly. The belt-pulley drive arrangement can be used as a safety element, as it reacts to overload by slipping. Factory consultation is necessary if one intends to use the belt-pulley drive as a safety device.

Auxiliary drives (WX)

The auxiliary drive is flange-mounted to the side face of the main right angle reducer, opposite the low speed shaft, using an intermediate flange and shaft connection. The connection between the main drive and the auxiliary drive is assembled with an overrunning clutch. During normal operation of the main drive, the clutch is disengaged. When it becomes necessary to operate the system at slow speed or “inch” the main reducer, the main motor is stopped and auxiliary motor and reducer engage the main drive through the overrunning clutch connection.

The auxiliary drive or inching drive is available to allow for the inspection and maintenance of belts and buckets and to allow for slow speed operation of conveyors or elevators that operate in cold-weather. The auxiliary drive should be equipped with a brake or brake motor in order to prevent unintended rotation or back driving.

The following auxiliary drive options are available:

- with overrunning clutch and backstop assembled in the intermediate flange (to prevent reverse rotation of the system), (standard design).
- with overrunning clutch in the flange and separate backstop as part of the main drive (to prevent reverse rotation of the system).
- with overrunning clutch assembled in the intermediate flange and no backstop.

Monitoring devices and sensors (MO)

The following monitoring devices are also available as options. Please contact us for detailed information about any of the oprtions listed below.

- Oil sight glass
- Oil level glass
- Oil dip-stick
- Pt100 (Temperature)
- PTC thermistor (Temeperature)
- Bimetal switch (Temperature)
- Particle counter (oil)
- Water content (oil)
- Electrical contamination indicator for oil filter
- Optical contamination indicator for oil filter
- SPM nipple (vibrations)
- Bearing condition monitor with evaluation unit
- Oil condition monitoring
- Pressure monitoring (oil circulation)
- Other options available upon request

Paint Coatings

NORD has a variety of paint coating options available in order to protect your investment regardless of the application's environment. Please refer to the table below for details:

MAXXDRIVE™ Paint Coating Options

Type	TFD total [µm	Similar to corrosivity category *	Recommended use
F1	60 - 100		For top-coat to be applied by customer
F2 Standard	50 - 90	C2	For indoor installation
F3.0	110 - 150	C2	For indoor and protected outdoor installation with low environmental contamination, e.g. open, unheated halls
F3.1	160 - 200	C3	For outdoor installation, city and industrial atmosphere with low contamination
F3.2	210 - 250	C4	For outdoor installation, city and industrial atmosphere with moderate environmental contamination
F3.3 + Z	200 - 240	C5	For outdoor installation, city and industrial atmosphere with high environmental contamination (Z - Compensation of contour depressions and crevices with seam sealer on polyurethane basis)
F3.4	100 - 140		For moderate exposure to chemicals
F3.5	100 - 140		Machinery for foodstuffs packaging
A			additional antimicrobial coating for all finishes except F3.4 and F3.5

1-K = single component 2-K = two-component, TFD = Dry film thickness max. [µm], HS = high solids

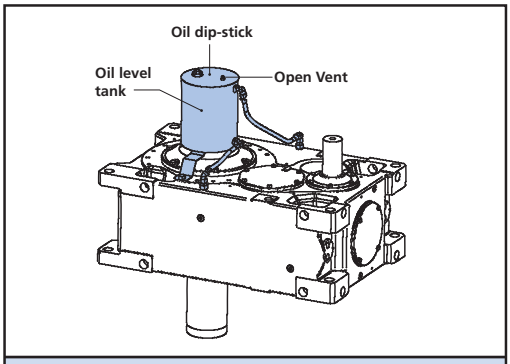

Oil Tank (OT)

Oil Tank (OT)

Sometimes the gearbox must be completely filled with oil in order to prevent excessive foaming and aeration while also preventing excessive pressure build-up or a critical loss in oil volume through the air vent or shaft seals. The oil tank must be located above the gear unit. Even at non-operating ambient conditions, a small amount of oil should be visible in the bottom of the oil reservoir. During operation, all critical bearing and gear areas are submersed in oil, especially the high-speed gear set. This prevents oil foaming.

The oil tank is vented and includes two flexible oil hoses that are connected to the gear unit in order to assure proper ventilation and passive oil circulation. Prior to start-up the oil level must be topped off and checked using the oil level dipstick that is part of the oil tank.

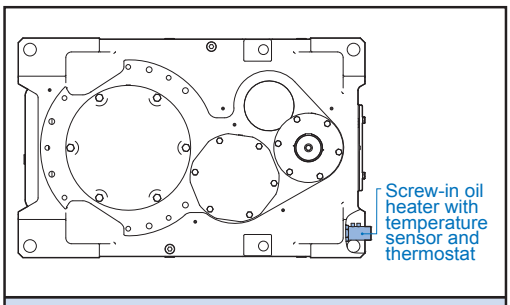

Oil Heater (OH)

⚠ IMPORTANT NOTE ⚠

When the following conditions exist consult NORD in order to determine if an Oil Tank (OT) option is needed:

- Parallel shaft unit with motor or input shaft vertical-up (M5 or M6 mounting position)

If a vertical mounting position is also required please reference the vertical mounting information found on page ⇨🕮 10

Oil heater (OH)

In case the ambient temperature is lower than what is permissible , the gear oil must be heated prior to a cold start, in order to ensure an adequate supply of lubricant. For these conditions, an oil heating cartridge may be installed into the gearbox.

The oil heater has both a temperature sensor and a thermostat, which is pre-set. Further variations are available on request.

If pressure circulation lubrication is used, the operational viscosity of the gear oil on start-up must be below 1800 cSt. For ISO-VG220 this corresponds to a temperature of at least (50°F) 10°C for mineral oil, and a temperature of at least (32°F) 0°C for synthetic oil. Below this range an oil heater must be used.

⚠ WARNING ⚠

The oil heater must be fully immersed in the oil bath in order to prevent damage. Please contact NORD if there is a need for an oil heater to be used in combination with pressure forced lubrication. (LC/LCX) More info on page ⇨🕮 82.

Oil Heater Compatibility

	Heating power for M1 and M3 mounting							
	340 W	380 W	470 W	590 W	760 W	870 W	1030 W	1410 W
SK 5.07	M1/M3 *							
SK 6.07	M1/M3 *							
SK 7.07		M1/M3 *						
SK 8.07		M1/M3 *						
SK 9.07			M1/M3 *					
SK 10.07			M1/M3 *					
SK 11.07				M1			M3	
SK 12.07				M1			M3	
SK 13.07					M1			M3
SK 14.07					M1			M3
SK 15.07						M1		M3

* In case of greater heating powers, please contact NORD DRIVESYSTEMS.

Depending on the oil level, other installation positions can often be equipped with an oil heater. Please contact NORD DRIVESYSTEMS.

Internal Water Cooler (CC)

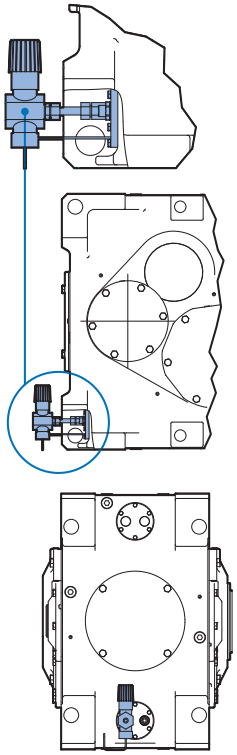

The internal water cooler is a cooling coil inside the gearbox, located in the oil sump, where the end user connects the coil to a suitable water supply. Two cooling coils may be installed for mounting positions M2, M4, M5, M6 and with complete oil filling on request.

With two coiling coils installed the thermal rating can be doubled.

WARNING

- Integrated water cooling can be used for oil splash and immersion lubrication, however, not with pressure circulation lubrication.
- The cooling element must be completely submerged in the oil bath.

As an option, mechanical and electrical solutions for controlling the flow of cooling water are available. This allows the water consumption to be regulated by the actual required cooling power.

IMPORTANT NOTE

Sea water-resistant integrated cooling is available on request. Consultation with NORD is necessary in case of any other aggressive cooling media.

Connection of the Internal Water Cooler

Temperature-controlled cooling water with quantity regulation and a temperature sensor (optional).

Operating Conditions

Water inlet temperature:	68° F	20° C
Oil temperature:	221° F	105° C
Ambient temperature:	68° F (104° F)	20° C (40° C)
Flow rate:	maximum: 1 -3.2 g/min	maximum: 4 -12 l/min
Pressure drop of cooling water	approx. 7.25-14.5 psi*	approx. 0.5 - 1 bar*

* maximum pressure of cooling water is 87psi/6 bar

For other operating conditions, corrections to the specified thermal power limit must be taken into account.

Optional:
Temperature-controlled flow regulator to control the rate of water flow.

IMPORTANT NOTE

For low temperatures the internal water cooler may also be used as an oil heater by filling it with warm water before starting up the gearbox .

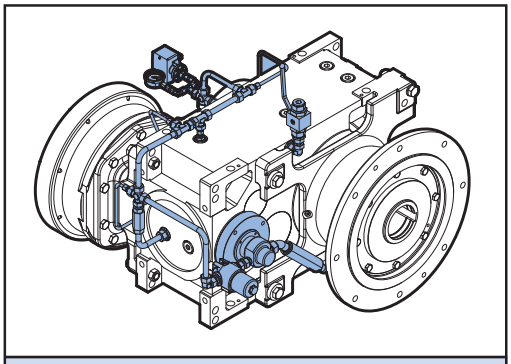

Pressure Forced Lubrication (LCX) - Shaft Driven

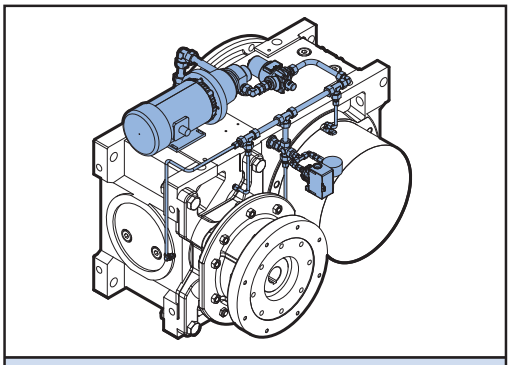

Pressure Forced Lubrication (LC) - Motor Driven

Pressure Forced Lubrication (LC/LCX)

With pressure or forced lubrication, a pump (shaft driven or motorized) is provided, which allows a relatively low oil level to be maintained. The pump and oil distribution lines deliver the oil to all critical gear and bearing areas. Oil levels may be lowered, even compared to standard splash oil levels. This type of lubrication is advisable for the following operating conditions:

- When splash or bath lubrication is not possible or not thermally advantageous.
- When high input speeds are present and the speed limit for other lubrication methods
  are being exceeded (based on size, ratio and mounting).
- If a drywell is required with a vertical output shaft.

There are two available forced lubrications system options, LC & LCX. The LC option only forces lubrication into the bearing cavities while the LCX option provides pressurized lubrication to the bearings as well as gearing.

⚠ *IMPORTANT NOTE* ⚠

Consult NORD when considering either bath lubrication or pressure lubrication so that appropriate options and accessories can be recommended.

Pressure Switch

All gearboxes with a pressure lubrication are equipped as standard with a pressure switch for monitoring the pump function. The connection of the pressure switch and the evaluation of the signal are carried out by operator. The pressure switch signal has to be handled after the oil pump building up pressure. During start-up, a brief period of low pressure is allowed while the pump is building pressure.

The pressure switch is an electrical switch for monitoring of the lubrication pressure at gear units with pressure lubrication. If the preset pressure is undercut, the applied electric signal will be interrupted by the pressure switch which can be handled by customers monitoring system.

⚠ *WARNING* ⚠

To eliminate the possibility of gearbox damage due to unsufficient lubrication pressure please read and adhere to the following reccomendations:

- The pressure switch must be connected and fully functional prior to start-up
- The pressure switch may only be provided with an appropriate monitoring system

External Cooling Units

In order to increase the thermal power capacity of the MAXXDRIVE™ gear unit, NORD has standard oil cooling/lubricating systems designed. These designs are readily available and offer a good price/performance ratio. The basic elements consist of a circulating oil pump and heat exchanger mounted on a mounting platform or base. An optional oil filter with visual contamination indicator is also recommended in most all cases.

If other forms of reducer cooling (convection, shaft fan, water cooler, etc.) are not sufficient or not desired a standard oil cooler option can be supplied. Nord offers oil/water (CS1) and oil/air (CS2) oil coolers with a variety of optional accessories.

Optional accessories:

- Thermometer.
- Pressure switch.
- Manometer.
- Optical status monitoring.
- Electrical status monitoring.
- Oil Filter.
- Filter with bypass.
- Particle counter.

Standard operating parameters:

- Water temperature (if applicable): 20°C (68°F)
- Maximum oil temperature: 105°C (225°F).
- Ambient temperature: 20°C (68°F) or 40°C (104°F).

Please consult NORD if there are additional cooling system requirements or requests.

Determining the Required Oil Cooler Size

There are two methods of determining the required oil cooler size, depending upon whether the oil cooler must provide all the cooling capacity for the gear unit or whether the oil cooler provides supplemental cooling.

Method 1 – Oil Cooler Provides All the Cooling Capacity

1.Determine the required oil cooling power as follows:

$P_{CS} = P_1 \cdot (1-\eta_N)$

P_{CS} = The required cooling power of the oil cooling system
P_1 = Installed motor power or required input power to the gear unit
η_N = Nominal gear reducer efficiency (in decimal form)

2.Select an oil cooler by applying the following criteria:

$Q_{CS} \geq P_{CS}$

Q_{CS} = The cooling power capacity of the selected oil cooling system

Method 2 – Oil Cooler Provides Additional/Supplemental Cooling Capacity

1.Determine the required oil cooling power as follows:

$P_{CS} = P_1 \cdot (1-\eta_N) - P_{wg}$

P_{CS} = The required cooling power of the oil cooling system
P_1 = Installed motor power or required input power to the gear unit
P_{wg} = Calculated thermal power capacity with an additional cooling method (⇨📖 27)
η_N = Nominal gear reducer efficiency (in decimal form)

2.Select an oil cooler by applying the following criteria:

$Q_{CS} \geq P_{CS}$

Q_{CS} = The cooling power capacity of the selected oil cooling system

⚠ *IMPORTANT NOTE* ⚠

The oil cooler thermal power limits shown in the respective tables are based upon standard installation and operating conditions (⇨📖 17) for the case when the oil cooler must provide all the cooling capacity for the gear unit.

Thermal Options

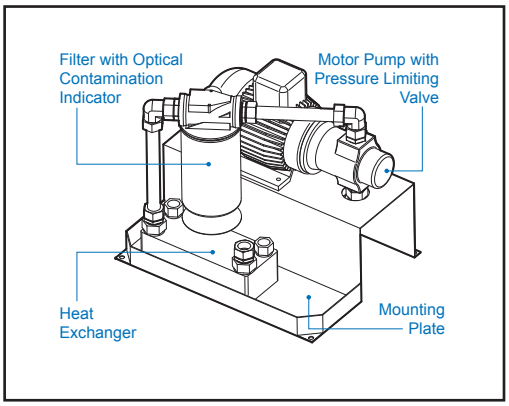

External oil / water cooler (CS1)

The oil/water cooling system is available with all gear units and is delivered seperately and mounted by the customer. NORD DRIVESYSTEMS supplies a pair of 2m flexible hoses for connection to the gearbox and the cooling system. Upon request, NORD DRIVESYSTEMS is able to mount the cooling system onto any mounting surface for the customer and the oil filter would need to be rotated into a suitable position upon delivery.

⚠ *IMPORTANT NOTE* ⚠

Additional measuring devices for the cooling system are available upon request.

CS1 Cooler Specifications

CS1 Oil Cooler Size	Cooling Power Q_{CS}		Water Flow Rate V_W		Oil Flow Rate $V_{Öl}$		Water Inlet Temp. $t_{W.ein}$		Pump Motor Power	
[-]	[kW]	[hp]	[l/min]	[gpm]	[l/min]	[gpm]	[°C]	[°F]	[kW]	[hp]
A	3,0	4,02	5	1,32	11	2,91	20	68	0,55	0,74
B	7,0	9,39	10	2,64	22	5,81	20	68	1,5	2,01
C	10,5	14,08	10	2,64	22	5,81	20	68	1,5	2,01
D	13,0	17,43	10	5,28	44	11,62	20	68	1,5	2,01
E	16,5	22,13	20	5,28	44	11,62	20	68	1,5	2,01
F	23,0	30,84	20	5,28	44	11,62	20	68	1,5	2,01
G	31,5	42,24	40	10,57	87	22,98	20	68	3,0	4,02
H	50,0	67,05	40	10,57	87	22,98	20	68	3,0	4,02

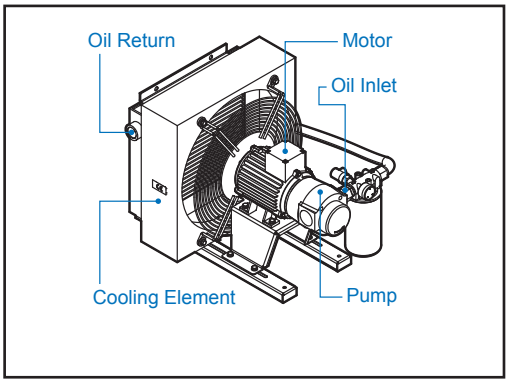

External oil / air cooler (CS2)

If cooling water is not available and other forms of cooling (convection, fan, etc.) are not sufficient or desired, an oil/air cooler can be supplied. The oil/air cooling system is available for all gear units and is delivered by NORD DRIVESYSTEMS seperately and mounted by the customer. NORD DRIVESYSTEMS supplies a pair of 2m flexible hoses for connection to the gearbox and the cooling system. Upon request, NORD DRIVESYSTEMS is able to mount the cooling system onto any mounting surface in a horizontal mounting orientation before delivery.

CS2 Cooler Specifications 50Hz

CS2 Oil Cooler Size	Cooling Power Q_{CS}		Oil Flow Rate $V_{Öl}$		Air Inlet Temp. $t_{W.ein}$		Pump Motor Power	
-	[kW]	[hp]	[l/min]	[gpm]	[°C]	[°F]	[kW]	[hp]
A	4,0	5,36	11	2,91	20	68	1,1	1,48
B	6,7	8,98	12	2,91	20	68	1,5	1,48
C	11,2	15,02	22	5,81	20	68	1,5	2,01
D	14,4	19,31	44	11,62	20	68	3,0	4,02
E	17,8	23,87	44	11.62	20	68	3,0	4,02
F	22,2	29,77	44	11,62	20	68	3,0	4,02
G	40,8	54,71	87	22,98	20	68	4,0	5,36
H	50,6	67,86	70	18,49	20	68	4,0	5,36

CS2 Cooler Specifications 60Hz

CS2 Oil Cooler Size	Cooling Power Q_{CS}		Oil Flow Rate $V_{Öl}$		Air Inlet Temp. $t_{W.ein}$		Pump Motor Power	
-	[kW]	[hp]	[l/min]	[gpm]	[°C]	[°F]	[kW]	[hp]
A	4,6	6,17	13	3,43	20	68	1,32	1,77
B	7,7	10,33	26	6,87	20	68	1,80	2,41
C	13,0	17,43	26	6,87	20	68	1,80	2,41
D	16,6	22,26	53	14,00	20	68	3,60	4,38
E	20,5	27,49	53	14.00	20	68	3,60	4,38
F	25,8	34,60	53	14,00	20	68	3,60	4,38
G	46,8	62,76	104	27,47	20	68	4,80	6,44
H	59,3	79,52	84	22,19	20	68	4,80	6,44

Gearbox Cooling Using a Fan (FAN)

Through the use of fans, the thermal power capacity of the gearbox may be increased substantially. Usually, a fan can be retrofitted to the gear unit. However this must be checked for each individual case (installation space, type of gearbox, mounting position, etc.). The fan cover provides protection against contact and guides the flow of cooling air over the gearbox housing.

Installation conditions for fans

An adequate supply of air to the fan must be ensured, the vent grill in the fan cover must be kept clear.

High-power radial fan (FAN)

The high power radial fan is suitable for both directions of rotation. It is the standard solution for helical gearboxes but can also used for bevel-helical gearboxes. It requires the free axial entry of air and is connected directly to the input shaft.

High-power axial fan (FAN)

The high-power axial fan is also directly connected to the input shaft of bevel-helical gearboxes. It provides a high cooling power, but only works in one direction of rotation.

The intake of air may be supplied in a radial direction which allows a brake or a fluid-coupling to be installed directly in front of the fan (see motor swing bases). Further information is available upon request. The direction of the rotation must be specified when ordering the unit.

High-power axial fan on swing bases (FAN)

On swing bases a larger high-power axial fan is used as standard. This high-power axial fan is also directly connected to the input shaft of bevel-helical gearboxes. It provides a very high cooling power, but only works in one direction of rotation.

The intake of air may be supplied in a radial direction which allows a brake or a fluid-coupling to be installed directly in front of the fan (see motor swing bases). Further information is available upon request. The direction of the rotation must be specified when ordering the unit.

Electric fan (FAN)

NORD DRIVESYSTEMS supplies an option electric fan as well. This fan is switched on as required with the use of a temperature switch.

The Electric fan is only available on our parallel Maxxdrive™ gear units. The fan may be attached to both ends of the parallel gear unit. Additional information is available upon request.

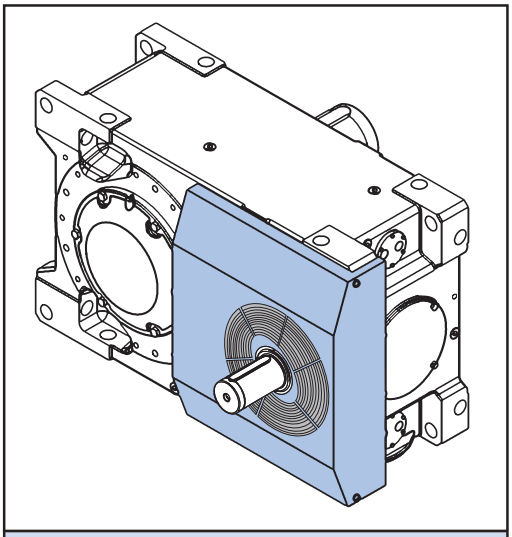

Helical Gear Unit with Standard Shaft Powered Fan

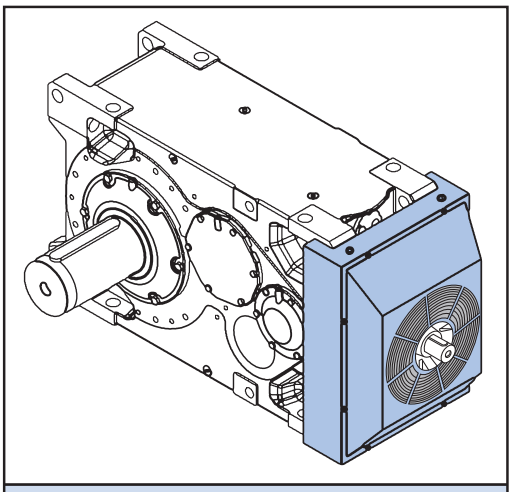

Bevel Gear Unit with Standard Shaft Powered Fan

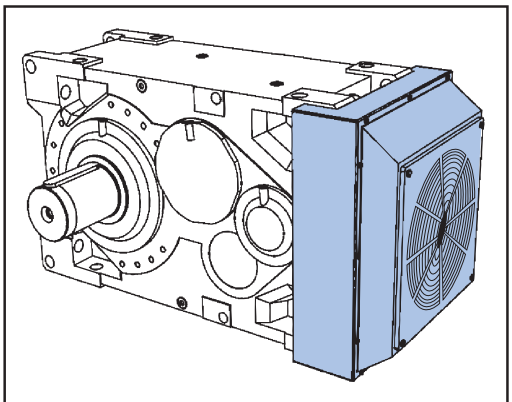

Helical Gear Unit with Electric Fan

Endurance Package Option

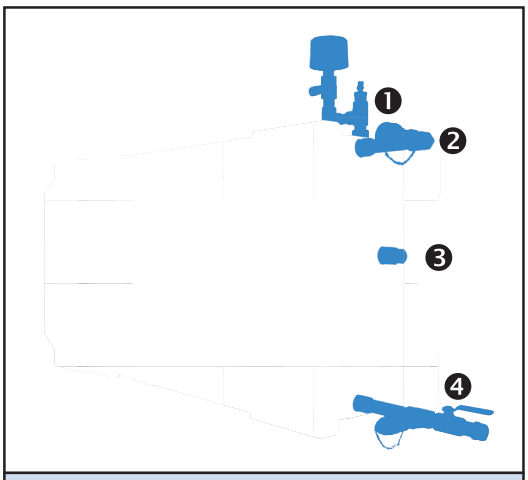

MAXXDRIVE™ unit with Endurance Package option

Endurance Package

NORD DRIVESYSTEMS "Endurance package" is a combination of protective features to ensure that your investment performs well for extended periods of time. Here at NORD DRIVESYSTEMS, we are consistently innovating ideas to make our products perform better in even the toughest environments.

The Endurance Package Features:

- Donaldson T.R.A.P.™ Breather (shipped loose) ❶
- Filter Cart Quick Disconnects ❷
- Esco 3D Bullseye™ Sight Glass ❸
- Oil Sample Port ❹

DRIVESYSTEMS

Parallel Ratings

Ratings Tables Overview 88
Nominal Power Ratings 90
Nominal Output Torques 94
Moment of Inertia Values 95
Exact Ratios 96
Thermal Ratings - M1/M3 Mounting - 1000 rpm @ 20° C 98
Thermal Ratings - M1/M3 Mounting - 1000 rpm @ 40° C 100
Thermal Ratings - M1/M3 Mounting - 1200 rpm @ 20° C 102
Thermal Ratings - M1/M3 Mounting - 1200 rpm @ 40° C 104
Thermal Ratings - M1/M3 Mounting - 1500 rpm @ 20° C 106
Thermal Ratings - M1/M3 Mounting - 1500 rpm @ 40° C 108
Thermal Ratings - M1/M3 Mounting - 1800 rpm @ 20° C 110
Thermal Ratings - M1/M3 Mounting - 1800 rpm @ 40° C 112
Thermal Ratings - M5 Mounting - 1000 rpm @ 20° C 114
Thermal Ratings - M5 Mounting - 1000 rpm @ 40° C 116
Thermal Ratings - M5 Mounting - 1200 rpm @ 20° C 118
Thermal Ratings - M5 Mounting - 1200 rpm @ 40° C 120
Thermal Ratings - M5 Mounting - 1500 rpm @ 20° C 122
Thermal Ratings - M5 Mounting - 1500 rpm @ 40° C 124
Thermal Ratings - M5 Mounting - 1800 rpm @ 20° C 126
Thermal Ratings - M5 Mounting - 1800 rpm @ 40° C 128

Structure of the Power Ratings Tables

Nominal Input Speed
The actual motor speeds depend on the size of the motor, and may differ

Nominal Output Speed
The Nominal Input Speed divided by the Nominal Ratio

Size of Gear Unit

Nom. Ratio	Nominal Input Speed	Nominal Output Speed	SK 5207/ SK 5307	SK 6207/ SK 6307	SK 7207/ SK 7307	SK 8207/ SK 8307	SK 9207/ SK 9307	SK 10207/ SK 10307	SK 11207/ SK 11307	SK 12207/ SK 12307	SK 13207/ SK 13307	SK 14207/ SK 14307	SK 15207/ SK 15307
			Rated Power										
i_N	n_{1N} [rpm]	n_{2N} [rpm]	P_N [kW]	P_N [kW]	P_N [kW]	P_N [kW]	P_N [kW]	P_N [kW]	P_N [kW]	P_N [kW]	P_N [kW]	P_N [kW]	P_N [kW]
8	1000	125	200	223	283	282	474	475	911	1.227	1.654	2.209	3.039
	1500	188	299	334	424	424	711	713	1.367	1.841	2.482	3.314	4.559
	1200	150	240	267	339	339	568	570	1.094	1.473	1.985	2.651	3.647
	1800	225	359	401	509	508	853	855	1.640	2.209	2.978	3.977	5.470

Nominal Ratio
Sized according to Standard Series

Nominal Output Power
with Service Factor (f_B) = 1,0

Structure of the Torque Rating Tables

Size of Gear Unit

Nom. Ratio	SK 5207/ SK 5307	SK 6207/ SK 6307	SK 7207/ SK 7307	SK 8207/ SK 8307	SK 9207/ SK 9307	SK 10207/ SK 10307	SK 11207/ SK 11307	SK 12207/ SK 12307	SK 13207/ SK 13307	SK 14207/ SK 14307	SK 15207/ SK 15307
	Output Torque										
i_N	M_{2max} [kNm]	M_{2max} [kNm]	M_{2max} [kNm]	M_{2max} [kNm]	M_{2max} [kNm]	M_{2max} [kNm]	M_{2max} [kNm]	M_{2max} [kNm]	M_{2max} [kNm]	M_{2max} [kNm]	M_{2max} [kNm]
22,4	15	20	24	29	40	46	74	109	151	190	270
25	15	20	24	29	40	47	76	109	151	190	273

Nominal Ratio
Sized according to Standard Series

SK ..207 Units
Units shaded this color are Two Stage Units

Nominal Output Torque
with Service Factor (f_B) = 1,0

SK ..307 Units
Units shaded this color are Three Stage Units

Structure of the Inertia Tables

Size of Gear Unit

Nom. Ratio	SK 5207/ SK 5307	SK 6207/ SK 6307	SK 7207/ SK 7307	SK 8207/ SK 8307	SK 9207/ SK 9307	SK 10207/ SK 10307	SK 11207/ SK 11307	SK 12207/ SK 12307	SK 13207/ SK 13307	SK 14207/ SK 14307	SK 15207/ SK 15307
	Moments of Inertia										
i_N	j_1 kgm²	j_1 kgm²	j_1 kgm²	j_1 kgm²	j_1 kgm²	j_1 kgm²	j_1 kgm²	j_1 kgm²	j_1 kgm²	j_1 kgm²	j_1 kgm²
22,4	0,014	0,021	0,026	0,040	0,066	0,097	0,266	0,441	0,715	0,843	1,940
25	0,014	0,015	0,026	0,028	0,065	0,070	0,223	0,365	0,600	0,820	1,620

Nominal Ratio
Sized according to Standard Series

SK ..207 Units
Units shaded this color are Two Stage Units

Moment of Inertia
Relative to the Input Shaft

SK ..307 Units
Units shaded this color are Three Stage Units

Structure of the Exact Ratio Tables

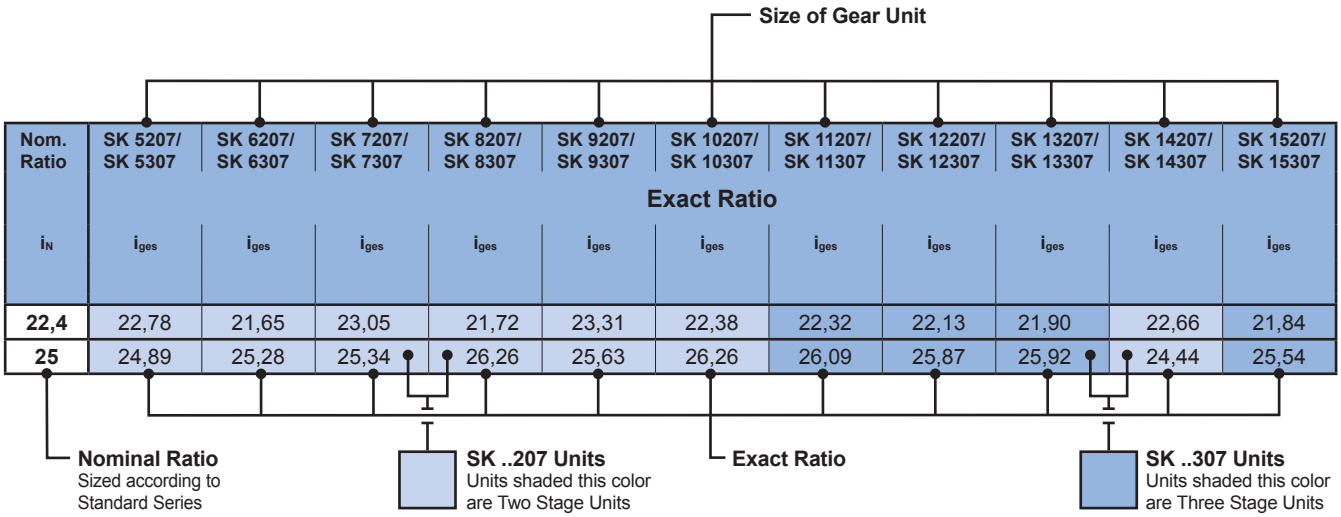

Nom. Ratio	SK 5207/ SK 5307	SK 6207/ SK 6307	SK 7207/ SK 7307	SK 8207/ SK 8307	SK 9207/ SK 9307	SK 10207/ SK 10307	SK 11207/ SK 11307	SK 12207/ SK 12307	SK 13207/ SK 13307	SK 14207/ SK 14307	SK 15207/ SK 15307
	Exact Ratio										
i_N	i_{ges}	i_{ges}	i_{ges}	i_{ges}	i_{ges}	i_{ges}	i_{ges}	i_{ges}	i_{ges}	i_{ges}	i_{ges}
22,4	22,78	21,65	23,05	21,72	23,31	22,38	22,32	22,13	21,90	22,66	21,84
25	24,89	25,28	25,34	26,26	25,63	26,26	26,09	25,87	25,92	24,44	25,54

Structure of the Thermal Rating Tables

1) 2) (see explanation below)

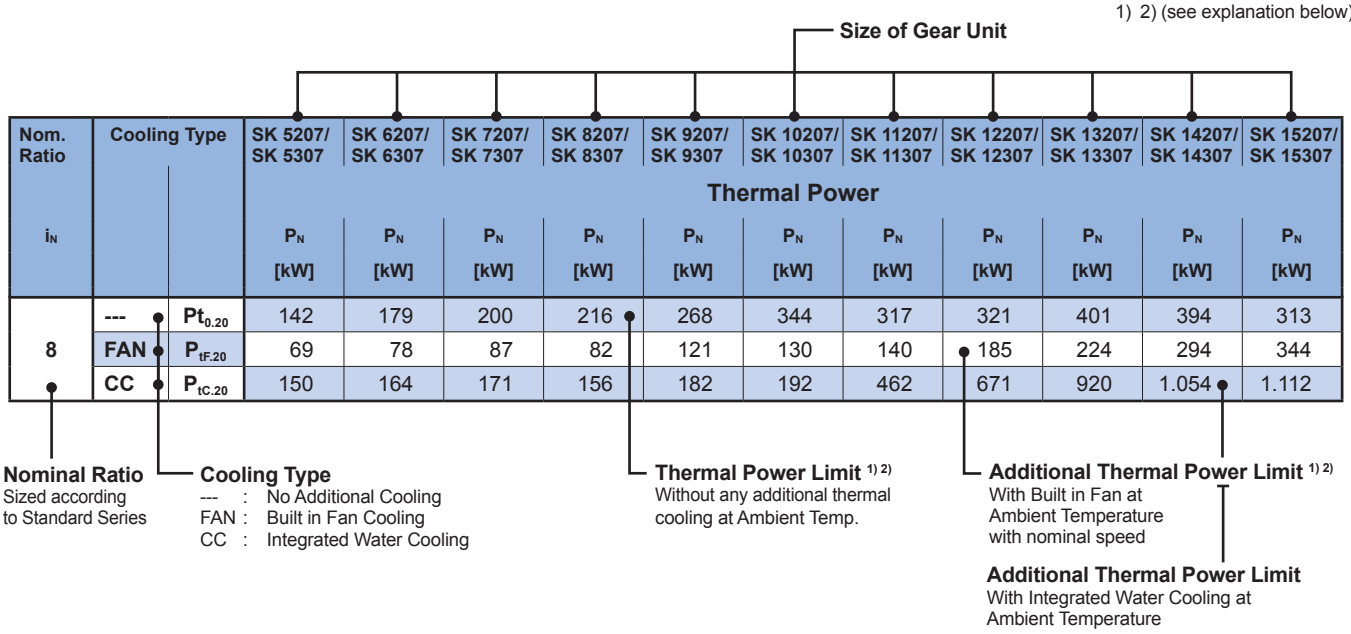

Nom. Ratio	Cooling Type		SK 5207/ SK 5307	SK 6207/ SK 6307	SK 7207/ SK 7307	SK 8207/ SK 8307	SK 9207/ SK 9307	SK 10207/ SK 10307	SK 11207/ SK 11307	SK 12207/ SK 12307	SK 13207/ SK 13307	SK 14207/ SK 14307	SK 15207/ SK 15307
			Thermal Power										
i_N			P_N [kW]	P_N [kW]	P_N [kW]	P_N [kW]	P_N [kW]	P_N [kW]	P_N [kW]	P_N [kW]	P_N [kW]	P_N [kW]	P_N [kW]
8	---	$Pt_{0.20}$	142	179	200	216	268	344	317	321	401	394	313
	FAN	$P_{tF.20}$	69	78	87	82	121	130	140	185	224	294	344
	CC	$P_{tC.20}$	150	164	171	156	182	192	462	671	920	1.054	1.112

1) Standard ambient conditions

Ambient temperature:	20°C (68°F) or 40°C (104°F)
Air circulation at installation location	large hall with good air circulation (v_L = 4,92 ft/s or 1,5 m/s)
Installation:	Foundation steel sub-construction
Installation altitude:	≤ 1000 m (3280 ft) above sea level
Installation position	Horizontal installation (M1 for 2-stage or M3 for 3 stage)
Type of lubrication:	Immersion lubrication Oel splash lubrication with PAO VG 220
Cooling water inlet temperature	20°C (68°F) or 40°C (104°F)

2) For Ratings at different temperatures please contact NORD DRIVESYSTEMS.

Nominal Power Ratings

Nom. Ratio	Nominal Input Speed	Nominal Output Speed	SK 5207/ SK 5307	SK 6207/ SK 6307	SK 7207/ SK 7307	SK 8207/ SK 8307	SK 9207/ SK 9307	SK 10207/ SK 10307	SK 11207/ SK 11307	SK 12207/ SK 12307	SK 13207/ SK 13307	SK 14207/ SK 14307	SK 15207/ SK 15307
			Rated Power										
i_N	n_{1N} [rpm]	n_{2N} [rpm]	P_N [kW]	P_N [kW]	P_N [kW]	P_N [kW]	P_N [kW]	P_N [kW]	P_N [kW]	P_N [kW]	P_N [kW]	P_N [kW]	P_N [kW]
5.6	1000	179	---	---	---	---	---	---	1.084	1.466	1.926	---	3.345
	1500	268	---	---	---	---	---	---	1.626	2.199	2.888	---	5.018
	1200	214	---	---	---	---	---	---	1.301	1.759	2.311	---	4.014
	1800	321	---	---	---	---	---	---	1.951	2.639	3.466	---	6.022
6.3	1000	159	---	---	---	---	---	---	1.085	1.446	1.905	---	3.344
	1500	238	---	---	---	---	---	---	1.627	2.169	2.857	---	5.016
	1200	190	---	---	---	---	---	---	1.301	1.735	2.286	---	4.013
	1800	286	---	---	---	---	---	---	1.952	2.603	3.429	---	6.019
7.1	1000	141	218	---	282	---	477	---	983	1.281	1.719	2.325	3.037
	1500	211	327	---	422	---	716	---	1.475	1.922	2.578	3.488	4.556
	1200	169	262	---	338	---	573	---	1.180	1.538	2.062	2.791	3.644
	1800	254	393	---	507	---	859	---	1.770	2.306	3.094	4.186	5.467
8	1000	125	200	223	283	282	474	475	911	1.227	1.654	2.209	3.039
	1500	188	299	334	424	424	711	713	1.367	1.841	2.482	3.314	4.559
	1200	150	240	267	339	339	568	570	1.094	1.473	1.985	2.651	3.647
	1800	225	359	401	509	508	853	855	1.640	2.209	2.978	3.977	5.470
9	1000	111	170	214	262	284	426	475	798	1.110	1.469	1.952	2.746
	1500	167	255	321	393	426	639	712	1.197	1.666	2.204	2.928	4.119
	1200	133	204	257	314	341	511	570	958	1.333	1.763	2.343	3.295
	1800	200	306	385	472	511	767	855	1.436	1.999	2.645	3.514	4.943
10	1000	100	155	191	241	266	392	441	734	1.055	1.399	1.853	2.571
	1500	150	233	286	362	398	587	662	1.101	1.582	2.098	2.779	3.856
	1200	120	186	229	290	319	470	530	881	1.266	1.679	2.223	3.085
	1800	180	280	343	435	478	705	795	1.322	1.899	2.518	3.335	4.627
11.2	1000	89	136	178	218	260	347	420	629	921	1.262	1.614	2.199
	1500	134	204	267	326	389	521	630	944	1.381	1.893	2.421	3.298
	1200	107	163	213	261	312	417	504	755	1.105	1.514	1.937	2.639
	1800	161	244	320	392	467	625	756	1.133	1.657	2.271	2.905	3.958
12.5	1000	80	124	160	199	224	319	370	581	861	1.207	1.530	2.054
	1500	120	186	240	298	337	479	555	871	1.291	1.811	2.295	3.082
	1200	96	149	192	238	269	383	444	697	1.033	1.449	1.836	2.465
	1800	144	224	288	358	404	575	665	1.045	1.549	2.173	2.754	3.698
14	1000	71	112	148	177	215	281	341	514	772	1.074	1.375	1.804
	1500	107	168	222	265	323	422	512	771	1.157	1.611	2.063	2.706
	1200	86	134	178	212	258	338	410	617	926	1.288	1.650	2.164
	1800	129	201	266	318	387	506	614	926	1.389	1.933	2.475	3.247
16	1000	63	102	134	161	184	259	297	473	714	1.005	1.302	1.687
	1500	94	154	202	242	277	388	445	710	1.071	1.507	1.953	2.530
	1200	75	123	161	193	221	310	356	568	857	1.205	1.563	2.024
	1800	113	184	242	290	332	465	535	852	1.285	1.808	2.344	3.036

Nom. Ratio	Nominal Input Speed	Nominal Output Speed	SK 5207/ SK 5307	SK 6207/ SK 6307	SK 7207/ SK 7307	SK 8207/ SK 8307	SK 9207/ SK 9307	SK 10207/ SK 10307	SK 11207/ SK 11307	SK 12207/ SK 12307	SK 13207/ SK 13307	SK 14207/ SK 14307	SK 15207/ SK 15307
			Rated Power										
i_N	n_{1N} [rpm]	n_{2N} [rpm]	P_N [kW]	P_N [kW]	P_N [kW]	P_N [kW]	P_N [kW]	P_N [kW]	P_N [kW]	P_N [kW]	P_N [kW]	P_N [kW]	P_N [kW]
18	1000	56	89	122	142	177	227	272	406	617	852	1.134	1.445
	1500	83	133	183	213	265	341	409	610	925	1.277	1.701	2.168
	1200	67	106	146	171	212	273	327	488	740	1.022	1.360	1.734
	1800	100	160	219	256	318	409	490	732	1.110	1.533	2.041	2.602
20	1000	50	81	107	129	146	208	237	375	567	786	1.051	1.352
	1500	75	122	160	193	219	313	355	563	851	1.179	1.576	2.027
	1200	60	97	128	155	175	250	284	450	681	943	1.261	1.622
	1800	90	146	192	232	263	375	426	676	1.021	1.415	1.891	2.433
22.4	1000	45	69	97	110	140	180	217	345	515	722	878	1.295
	1500	67	103	145	166	210	269	325	517	772	1.083	1.317	1.942
	1200	54	83	116	132	168	216	260	414	618	866	1.054	1.554
	1800	80	124	174	199	252	323	390	621	927	1.299	1.581	2.331
25	1000	40	63	83	100	114	165	187	305	442	611	814	1.121
	1500	60	95	124	151	172	247	281	458	663	916	1.221	1.682
	1200	48	76	99	121	137	198	225	366	530	733	977	1.345
	1800	72	114	149	181	206	296	337	549	796	1.099	1.465	2.018
28	1000	36	55	75	91	111	149	172	279	407	560	745	1.037
	1500	54	82	113	137	166	224	258	418	610	840	1.118	1.556
	1200	43	66	90	110	133	179	206	335	488	672	894	1.245
	1800	64	99	135	164	199	269	309	502	732	1.008	1.341	1.867
31.5	1000	32	50	66	83	94	136	156	250	362	497	623	919
	1500	48	75	99	125	141	205	234	375	543	746	934	1.379
	1200	38	60	79	100	113	164	187	300	434	597	747	1.103
	1800	57	90	119	150	169	246	281	450	651	895	1.121	1.655
35.5	1000	28	43	60	70	90	116	142	229	333	456	577	844
	1500	42	65	90	106	135	174	213	343	500	684	866	1.266
	1200	34	52	72	85	108	139	170	275	400	547	693	1.013
	1800	51	78	108	127	162	208	256	412	599	821	1.039	1.520
40	1000	25	40	52	64	74	106	120	196	286	386	506	723
	1500	38	59	78	96	110	159	180	294	429	578	759	1.085
	1200	30	48	62	77	88	127	144	235	343	463	607	868
	1800	45	71	94	115	132	190	216	353	515	694	910	1.302
45	1000	22	35	47	54	69	97	110	179	263	353	469	664
	1500	33	52	71	81	104	145	165	269	395	530	703	996
	1200	27	41	57	65	83	116	132	215	316	424	563	797
	1800	40	62	85	97	125	174	197	323	474	636	844	1.195
50	1000	20	32	42	52	57	88	100	160	234	316	392	583
	1500	30	47	62	78	85	132	150	239	351	474	588	875
	1200	24	38	50	63	68	106	120	192	280	379	470	700
	1800	36	57	75	94	102	159	180	287	421	569	705	1.049

Nominal Power Ratings

Nom. Ratio	Nominal Input Speed	Nominal Output Speed	SK 5207/ SK 5307	SK 6207/ SK 6307	SK 7207/ SK 7307	SK 8207/ SK 8307	SK 9207/ SK 9307	SK 10207/ SK 10307	SK 11207/ SK 11307	SK 12207/ SK 12307	SK 13207/ SK 13307	SK 14207/ SK 14307	SK 15207/ SK 15307
			Rated Power										
i_N	n_{1N} [rpm]	n_{2N} [rpm]	P_N [kW]	P_N [kW]	P_N [kW]	P_N [kW]	P_N [kW]	P_N [kW]	P_N [kW]	P_N [kW]	P_N [kW]	P_N [kW]	P_N [kW]
56	1000	18	28	38	46	56	78	92	146	215	289	363	535
	1500	27	42	57	69	84	117	138	219	322	434	545	803
	1200	21	34	45	55	67	94	111	175	258	347	436	643
	1800	32	50	68	83	101	141	166	263	387	521	654	964
63	1000	16	26	34	42	48	71	82	125	185	244	322	459
	1500	24	38	50	63	72	107	123	188	277	366	483	688
	1200	19	31	40	50	58	86	98	150	221	293	386	550
	1800	29	46	61	76	87	129	148	225	332	439	579	825
71	1000	14	22	31	36	45	61	75	114	170	223	298	421
	1500	21	33	46	53	68	91	113	172	255	334	447	632
	1200	17	27	37	43	54	73	90	137	204	267	358	505
	1800	25	40	55	64	81	109	135	206	306	401	537	758
80	1000	13	20	27	32	37	55	63	99	135	189	249	367
	1500	19	30	40	49	56	83	95	148	203	283	374	550
	1200	15	24	32	39	44	66	76	119	163	227	299	440
	1800	23	36	48	58	67	100	114	178	244	340	449	660
90	1000	11	18	24	27	35	50	58	90	128	179	231	337
	1500	17	26	36	41	52	76	87	136	192	269	346	505
	1200	13	21	29	33	42	61	70	108	153	215	277	404
	1800	20	32	43	49	63	91	104	163	230	323	416	606
100	1000	10	16	21	26	29	46	53	77	111	151	201	288
	1500	15	24	32	40	43	69	79	116	167	227	301	433
	1200	12	19	25	32	35	55	63	93	134	182	241	346
	1800	18	29	38	48	52	83	95	139	200	273	362	519
112	1000	9	14	19	23	28	40	48	71	104	139	186	265
	1500	13	21	29	34	42	60	72	106	156	208	279	397
	1200	11	17	23	27	34	48	58	85	125	167	223	318
	1800	16	25	35	41	51	71	87	127	187	250	335	477
125	1000	8	13	17	21	23	36	41	---	---	---	156	---
	1500	12	19	25	31	35	54	62	---	---	---	233	---
	1200	10	15	20	25	28	43	50	---	---	---	187	---
	1800	14	23	30	37	42	65	74	---	---	---	280	---
140	1000	7	11	15	18	22	33	38	---	---	---	144	---
	1500	11	17	23	28	33	50	56	---	---	---	216	---
	1200	9	13	18	22	26	40	45	---	---	---	173	---
	1800	13	20	27	33	40	60	68	---	---	---	260	---
160	1000	6	10	13	17	19	29	34	---	---	---	---	---
	1500	9	15	20	25	28	43	52	---	---	---	---	---
	1200	8	12	16	20	23	34	41	---	---	---	---	---
	1800	11	18	24	30	34	51	62	---	---	---	---	---

Nom. Ratio	Nominal Input Speed	Nominal Output Speed	SK 5207/ SK 5307	SK 6207/ SK 6307	SK 7207/ SK 7307	SK 8207/ SK 8307	SK 9207/ SK 9307	SK 10207/ SK 10307	SK 11207/ SK 11307	SK 12207/ SK 12307	SK 13207/ SK 13307	SK 14207/ SK 14307	SK 15207/ SK 15307
			Rated Power										
i_N	n_{1N} [rpm]	n_{2N} [rpm]	P_N [kW]	P_N [kW]	P_N [kW]	P_N [kW]	P_N [kW]	P_N [kW]	P_N [kW]	P_N [kW]	P_N [kW]	P_N [kW]	P_N [kW]
180	1000	6	9	12	13	18	26	30	---	---	---	---	---
	1500	8	13	18	19	27	39	44	---	---	---	---	---
	1200	7	10	14	16	21	31	35	---	---	---	---	---
	1800	10	16	22	23	32	47	53	---	---	---	---	---
200	1000	5	8	10	13	13	13	27	---	---	---	---	---
	1500	8	12	16	19	19	20	41	---	---	---	---	---
	1200	6	10	13	15	16	16	32	---	---	---	---	---
	1800	9	14	19	23	23	24	49	---	---	---	---	---
224	1000	4	7	10	11	13	13	12	---	---	---	---	---
	1500	7	10	14	17	19	19	18	---	---	---	---	---
	1200	5	8	11	13	15	16	14	---	---	---	---	---
	1800	8	12	17	20	23	23	21	---	---	---	---	---
250	1000	4	6	8	10	12	13	12	---	---	---	---	---
	1500	6	9	12	15	17	19	17	---	---	---	---	---
	1200	5	8	10	12	14	16	14	---	---	---	---	---
	1800	7	11	15	18	21	23	21	---	---	---	---	---
280	1000	4	6	8	9	11	13	12	---	---	---	---	---
	1500	5	8	11	14	16	19	17	---	---	---	---	---
	1200	4	7	9	11	13	15	14	---	---	---	---	---
	1800	6	10	14	16	20	23	21	---	---	---	---	---
315	1000	3	5	7	8	9	12	12	---	---	---	---	---
	1500	5	8	10	12	14	19	17	---	---	---	---	---
	1200	4	6	8	10	11	15	14	---	---	---	---	---
	1800	6	9	12	15	17	22	21	---	---	---	---	---
355	1000	3	---	6	---	9	12	11	---	---	---	---	---
	1500	4	---	9	---	13	18	17	---	---	---	---	---
	1200	3	---	7	---	11	15	14	---	---	---	---	---
	1800	5	---	11	---	16	22	20	---	---	---	---	---
400	1000	3	---	---	---	---	---	11	---	---	---	---	---
	1500	4	---	---	---	---	---	17	---	---	---	---	---
	1200	3	---	---	---	---	---	13	---	---	---	---	---
	1800	5	---	---	---	---	---	20	---	---	---	---	---

Nominal Output Torques

Nom. Ratio	SK 5207/ SK 5307	SK 6207/ SK 6307	SK 7207/ SK 7307	SK 8207/ SK 8307	SK 9207/ SK 9307	SK 10207/ SK 10307	SK 11207/ SK 11307	SK 12207/ SK 12307	SK 13207/ SK 13307	SK 14207/ SK 14307	SK 15207/ SK 15307
	Output Torque										
i_N	M_{2max} [kNm]	M_{2max} [kNm]	M_{2max} [kNm]	M_{2max} [kNm]	M_{2max} [kNm]	M_{2max} [kNm]	M_{2max} [kNm]	M_{2max} [kNm]	M_{2max} [kNm]	M_{2max} [kNm]	M_{2max} [kNm]
5,6	---	---	---	---	---	---	60	79	108	---	177
6,3	---	---	---	---	---	---	65	85	116	---	193
7,1	15	---	19	---	33	---	67	89	120	160	207
8	15	17	21	22	36	37	69	93	126	164	226
9	15	18	23	24	37	40	69	96	130	168	235
10	15	19	23	26	37	43	69	100	135	172	240
11,2	15	19	23	27	38	45	70	102	137	176	240
12,5	15	20	23	28	38	45	71	104	143	180	245
14	15	20	24	28	39	46	71	106	146	184	245
16	15	20	24	28	39	46	71	107	149	188	249
18	15	20	24	29	39	46	72	108	149	190	250
20	15	20	24	29	40	46	73	108	150	190	255
22,4	15	20	24	29	40	46	74	109	151	190	270
25	15	20	24	29	40	47	76	109	151	190	273
28	15	20	24	29	41	47	76	110	151	190	276
31,5	15	20	24	29	41	48	76	110	152	190	276
35,5	15	20	24	29	41	48	76	110	152	190	277
40	15	20	24	29	41	48	76	111	152	190	278
45	15	20	23	29	41	48	77	111	152	190	278
50	15	20	24	28	41	48	77	112	152	190	278
56	15	20	24	29	41	49	77	112	151	190	279
63	15	20	24	29	42	49	77	112	151	190	279
71	15	20	24	29	42	49	77	113	150	190	280
80	15	20	25	29	42	49	77	105	145	190	280
90	15	20	23	29	42	49	77	108	150	190	281
100	15	20	25	28	42	49	77	110	150	190	281
112	15	20	25	29	42	49	77	112	150	190	282
125	15	20	25	29	43	50	---	---	---	190	---
140	15	20	25	29	43	50	---	---	---	190	---
160	15	20	25	29	43	50	---	---	---	---	---
180	15	20	22	29	43	50	---	---	---	---	---
200	15	20	24	25	25	50	---	---	---	---	---
224	15	20	25	26	27	25	---	---	---	---	---
250	15	20	25	29	32	27	---	---	---	---	---
280	15	20	25	29	34	32	---	---	---	---	---
315	15	20	25	29	37	35	---	---	---	---	---
355	---	20	---	29	40	38	---	---	---	---	---
400	---	---	---	---	---	41	---	---	---	---	---

SK ..207 Units

SK ..307 Units

Nom. Ratio	SK 5207/ SK 5307	SK 6207/ SK 6307	SK 7207/ SK 7307	SK 8207/ SK 8307	SK 9207/ SK 9307	SK 10207/ SK 10307	SK 11207/ SK 11307	SK 12207/ SK 12307	SK 13207/ SK 13307	SK 14207/ SK 14307	SK 15207/ SK 15307
	Moments of Inertia										
i_N	j_1 kgm²	j_1 kgm²	j_1 kgm²	j_1 kgm²	j_1 kgm²	j_1 kgm²	j_1 kgm²	j_1 kgm²	j_1 kgm²	j_1 kgm²	j_1 kgm²
5,6	---	---	---	---	---	---	1,120	1,920	2,980	---	8,540
6,3	---	---	---	---	---	---	1,080	1,850	2,880	---	8,270
7,1	0,071	---	0,131	---	0,336	---	0,819	1,330	2,150	3,780	5,900
8	0,068	0,080	0,127	0,153	0,322	0,379	0,790	1,290	2,080	3,550	5,730
9	0,050	0,077	0,095	0,144	0,246	0,358	0,598	0,981	1,550	2,720	4,310
10	0,048	0,056	0,093	0,109	0,237	0,274	0,580	0,956	1,510	2,570	4,200
11,2	0,036	0,054	0,068	0,103	0,179	0,260	0,432	0,713	1,180	1,940	3,090
12,5	0,035	0,040	0,067	0,078	0,173	0,196	0,421	0,697	1,150	1,860	3,030
14	0,028	0,039	0,049	0,074	0,125	0,187	0,350	0,569	0,946	1,470	2,350
16	0,027	0,031	0,048	0,055	0,121	0,136	0,342	0,559	0,928	1,410	2,310
18	0,020	0,030	0,038	0,053	0,094	0,131	0,263	0,398	0,702	1,150	1,670
20	0,019	0,022	0,037	0,042	0,092	0,101	0,259	0,392	0,691	1,120	1,650
22,4	0,014	0,021	0,026	0,040	0,066	0,097	0,266	0,441	0,715	0,843	1,940
25	0,014	0,015	0,026	0,028	0,065	0,070	0,223	0,365	0,600	0,820	1,620
28	0,016	0,015	0,031	0,027	0,065	0,068	0,221	0,362	0,594	0,762	1,610
31,5	0,016	0,017	0,031	0,033	0,064	0,068	0,141	0,238	0,373	0,674	1,040
35,5	0,014	0,017	0,026	0,032	0,051	0,067	0,139	0,236	0,369	0,663	1,030
40	0,013	0,014	0,025	0,026	0,051	0,053	0,122	0,205	0,324	0,408	0,906
45	0,012	0,014	0,022	0,026	0,045	0,052	0,121	0,203	0,322	0,401	0,900
50	0,012	0,012	0,022	0,023	0,044	0,046	0,078	0,128	0,202	0,366	0,512
56	0,007	0,012	0,012	0,022	0,024	0,045	0,077	0,127	0,201	0,361	0,509
63	0,007	0,007	0,012	0,012	0,024	0,025	0,070	0,115	0,182	0,218	0,459
71	0,006	0,007	0,010	0,012	0,021	0,025	0,070	0,114	0,181	0,215	0,457
80	0,006	0,006	0,010	0,011	0,021	0,021	0,044	0,071	0,119	0,201	0,265
90	0,006	0,006	0,010	0,011	0,019	0,021	0,044	0,071	0,118	0,199	0,264
100	0,006	0,006	0,010	0,010	0,019	0,019	0,041	0,066	0,111	0,128	0,244
112	0,004	0,006	0,006	0,010	0,012	0,019	0,041	0,066	0,111	0,127	0,243
125	0,004	0,004	0,006	0,006	0,011	0,012	---	---	---	0,121	---
140	0,003	0,004	0,005	0,006	0,011	0,011	---	---	---	0,121	---
160	0,003	0,003	0,005	0,005	0,008	0,011	---	---	---	---	---
180	0,002	0,003	0,003	0,005	0,008	0,008	---	---	---	---	---
200	0,002	0,002	0,003	0,003	0,006	0,008	---	---	---	---	---
224	0,002	0,002	0,003	0,003	0,006	0,006	---	---	---	---	---
250	0,002	0,002	0,003	0,003	0,006	0,006	---	---	---	---	---
280	0,002	0,002	0,003	0,003	0,006	0,006	---	---	---	---	---
315	0,002	0,002	0,003	0,003	0,006	0,006	---	---	---	---	---
355	---	0,002	---	0,003	0,006	0,006	---	---	---	---	---
400	---	---	---	---	---	0,006	---	---	---	---	---

SK ..207 Units

SK ..307 Units

Exact Ratios

Nom. Übersetzung	SK 5207/ SK 5307	SK 6207/ SK 6307	SK 7207/ SK 7307	SK 8207/ SK 8307	SK 9207/ SK 9307	SK 10207/ SK 10307	SK 11207/ SK 11307	SK 12207/ SK 12307	SK 13207/ SK 13307	SK 14207/ SK 14307	SK 15207/ SK 15307
	Exact Ratio										
i_N	i_{ges}	i_{ges}	i_{ges}	i_{ges}	i_{ges}	i_{ges}	i_{ges}	i_{ges}	i_{ges}	i_{ges}	i_{ges}
5,6							5,77	5,64	5,85		5,54
6,3							6,31	6,16	6,38		6,04
7,1	7,20		7,16		7,24		7,19	7,27	7,31	7,20	7,15
8	7,87	7,99	7,87	8,15	7,96	8,15	7,87	7,93	7,98	7,77	7,80
9	9,25	8,80	8,99	8,66	9,10	8,93	9,05	9,10	9,26	9,01	8,96
10	10,11	10,27	9,89	10,25	10,00	10,25	9,91	9,93	10,11	9,72	9,78
11,2	11,57	11,31	11,26	10,89	11,39	11,22	11,61	11,60	11,37	11,42	11,44
12,5	12,65	12,84	12,38	12,83	12,52	12,83	12,71	12,66	12,40	12,32	12,48
14	14,05	14,15	14,20	13,63	14,37	14,05	14,46	14,39	14,24	14,01	14,19
16	15,35	15,59	15,62	16,19	15,79	16,19	15,83	15,69	15,53	15,12	15,48
18	17,70	17,18	17,94	17,20	18,14	17,72	18,50	18,34	18,38	17,55	18,11
20	19,35	19,65	19,72	20,44	19,94	20,44	20,25	20,01	20,05	18,93	19,76
22,4	22,78	21,65	23,05	21,72	23,31	22,38	22,32	22,13	21,90	22,66	21,84
25	24,89	25,28	25,34	26,26	25,63	26,26	26,09	25,87	25,92	24,44	25,54
28	28,65	27,85	27,89	27,90	28,44	28,76	28,56	28,22	28,28	26,70	27,86
31,5	31,30	31,79	30,67	31,79	31,26	32,04	31,90	31,82	31,91	31,95	31,49
35,5	36,27	35,03	36,21	33,77	36,98	35,08	34,93	34,71	34,81	34,47	34,35
40	39,63	40,25	39,81	41,26	40,65	41,66	40,83	40,58	41,20	39,33	40,18
45	45,45	44,35	44,60	43,84	44,70	45,62	44,70	44,26	44,94	42,44	43,83
50	49,67	50,44	49,04	50,82	49,13	50,35	50,25	50,01	50,17	50,78	50,02
56	56,12	55,58	55,39	53,99	55,56	55,14	55,01	54,56	54,73	54,79	54,56
63	61,32	62,28	60,91	63,12	61,07	62,59	64,31	63,77	64,78	61,84	63,82
71	71,05	68,62	71,91	67,07	72,25	68,54	70,40	69,56	70,66	66,72	69,62
80	77,63	78,85	79,07	81,94	79,41	81,38	81,58	81,18	80,34	79,84	80,10
90	89,03	86,87	88,56	87,06	87,32	89,12	89,30	88,55	87,64	86,14	87,37
100	97,29	98,81	97,38	100,92	95,98	98,36	104,39	103,51	103,73	99,02	102,20
112	113,87	108,87	113,97	107,23	111,90	107,71	114,28	112,91	113,15	106,84	111,48
125	124,43	126,37	125,31	129,87	123,04	125,57				127,85	
140	142,70	139,24	140,37	137,98	135,24	138,60				137,94	
160	155,93	158,36	154,34	159,95	157,18	151,77					
180	179,89	174,49	177,56	169,95	172,76	177,05					
200	196,56	199,63	195,24	202,34	198,68	193,87					
224	227,74	219,96	230,49	214,99	218,38	223,80					
250	248,85	252,74	253,44	262,65	258,35	245,07					
280	285,40	278,48	283,89	279,07	283,96	291,01					
315	311,85	316,72	312,15	323,50	312,23	318,66					
355		348,98		343,72	343,19	351,71					
400						385,13					

SK ..207 Units

SK ..307 Units

Thermal Ratings
M1/M3 Mounting - 1000 rpm
@ 20°C = 68°F



Nom. Ratio	Cooling Type		SK 5207/ SK 5307	SK 6207/ SK 6307	SK 7207/ SK 7307	SK 8207/ SK 8307	SK 9207/ SK 9307	SK 10207/ SK 10307	SK 11207/ SK 11307	SK 12207/ SK 12307	SK 13207/ SK 13307	SK 14207/ SK 14307	SK 15207/ SK 15307
			Thermal Power										
i_N			P_N [kW]	P_N [kW]	P_N [kW]	P_N [kW]	P_N [kW]	P_N [kW]	P_N [kW]	P_N [kW]	P_N [kW]	P_N [kW]	P_N [kW]
5,6	---	$Pt_{0.20}$	---	---	---	---	---	---	295	225	270	---	*
	FAN	$P_{tF.20}$	---	---	---	---	---	---	166	237	277	---	288
	CC	$P_{tC.20}$	---	---	---	---	---	---	542	830	1.099	---	1.268
6,3	---	$Pt_{0.20}$	---	---	---	---	---	---	287	225	280	---	*
	FAN	$P_{tF.20}$	---	---	---	---	---	---	155	216	258	---	326
	CC	$P_{tC.20}$	---	---	---	---	---	---	509	764	1.034	---	1.232
7,1	---	$Pt_{0.20}$	150	---	207	---	283	---	331	338	410	389	301
	FAN	$P_{tF.20}$	73	---	91	---	130	---	149	201	237	308	372
	CC	$P_{tC.20}$	159	---	178	---	195	---	491	725	974	1.101	1.194
8	---	$Pt_{0.20}$	142	179	200	216	268	344	317	321	401	394	313
	FAN	$P_{tF.20}$	69	78	87	82	121	130	140	185	224	294	344
	CC	$P_{tC.20}$	150	164	171	156	182	192	462	671	920	1.054	1.112
9	---	$Pt_{0.20}$	144	167	203	239	288	324	345	383	480	527	523
	FAN	$P_{tF.20}$	67	73	83	90	118	121	134	177	207	268	313
	CC	$P_{tC.20}$	146	152	163	171	177	179	445	648	864	979	1.042
10	---	$Pt_{0.20}$	137	171	196	210	271	343	328	359	462	521	511
	FAN	$P_{tF.20}$	63	71	80	75	110	118	126	164	196	258	295
	CC	$P_{tC.20}$	137	150	156	142	166	175	420	601	818	946	983
11,2	---	$Pt_{0.20}$	138	159	195	232	282	322	338	395	504	596	643
	FAN	$P_{tF.20}$	62	66	76	82	107	110	118	155	187	236	273
	CC	$P_{tC.20}$	135	139	149	156	161	163	395	573	783	876	921
12,5	---	$Pt_{0.20}$	130	162	188	200	264	332	321	372	482	579	612
	FAN	$P_{tF.20}$	58	66	73	68	100	108	112	145	177	227	255
	CC	$P_{tC.20}$	127	139	143	130	151	159	373	537	743	841	864
14	---	$Pt_{0.20}$	129	151	183	220	270	311	321	389	497	610	674
	FAN	$P_{tF.20}$	57	61	69	75	97	100	106	139	164	212	240
	CC	$P_{tC.20}$	124	128	135	143	147	149	353	514	694	790	816
16	---	$Pt_{0.20}$	122	152	176	187	254	316	305	363	475	591	639
	FAN	$P_{tF.20}$	53	61	66	62	91	98	100	129	156	204	225
	CC	$P_{tC.20}$	117	127	129	118	137	145	334	479	660	759	767
18	---	$Pt_{0.20}$	117	141	168	206	250	296	295	364	467	597	667
	FAN	$P_{tF.20}$	51	56	61	68	87	91	92	121	142	188	209
	CC	$P_{tC.20}$	111	118	120	129	131	135	308	447	599	703	713
20	---	$Pt_{0.20}$	111	137	162	171	235	291	280	341	446	577	632
	FAN	$P_{tF.20}$	48	54	59	56	81	87	88	113	135	181	197
	CC	$P_{tC.20}$	105	114	116	106	123	129	293	419	572	676	673
22,4	---	$Pt_{0.20}$	107	128	151	188	227	273	188	231	275	558	242
	FAN	$P_{tF.20}$	46	50	54	61	76	82	80	103	125	163	187
	CC	$P_{tC.20}$	100	106	106	116	115	121	265	379	521	611	608
25	---	$Pt_{0.20}$	102	125	146	154	213	262	183	228	270	540	261
	FAN	$P_{tF.20}$	43	49	52	49	72	77	75	98	116	157	175
	CC	$P_{tC.20}$	95	103	102	94	108	114	248	359	484	589	575
28	---	$Pt_{0.20}$	80	117	107	169	172	246	176	216	260	342	251
	FAN	$P_{tF.20}$	37	46	43	54	63	72	72	92	111	138	167
	CC	$P_{tC.20}$	80	96	85	102	95	107	237	339	465	508	549
31,5	---	$Pt_{0.20}$	77	93	104	113	164	201	196	252	308	328	367
	FAN	$P_{tF.20}$	35	39	42	40	60	63	69	90	105	126	151
	CC	$P_{tC.20}$	76	81	82	77	90	93	230	333	444	465	506
35,5	---	$Pt_{0.20}$	74	88	99	122	156	191	188	237	296	320	352
	FAN	$P_{tF.20}$	34	37	39	43	56	60	66	85	101	123	144
	CC	$P_{tC.20}$	74	77	78	82	85	88	220	315	426	453	484
40	---	$Pt_{0.20}$	71	86	96	104	149	182	179	230	281	361	345
	FAN	$P_{tF.20}$	32	36	38	37	53	56	62	80	94	115	137
	CC	$P_{tC.20}$	70	75	75	70	80	83	206	298	396	427	461
45	---	$Pt_{0.20}$	68	82	95	112	145	173	172	217	271	351	330
	FAN	$P_{tF.20}$	31	34	38	39	52	53	59	76	90	111	131
	CC	$P_{tC.20}$	68	71	75	75	78	79	198	282	381	415	441

*** Additional Cooling Necessary - Consult Factory**

Nom. Ratio	Cooling Type		SK 5207/ SK 5307	SK 6207/ SK 6307	SK 7207/ SK 7307	SK 8207/ SK 8307	SK 9207/ SK 9307	SK 10207/ SK 10307	SK 11207/ SK 11307	SK 12207/ SK 12307	SK 13207/ SK 13307	SK 14207/ SK 14307	SK 15207/ SK 15307
			Thermal Power										
i_N			P_N [kW]	P_N [kW]	P_N [kW]	P_N [kW]	P_N [kW]	P_N [kW]	P_N [kW]	P_N [kW]	P_N [kW]	P_N [kW]	P_N [kW]
50	---	$Pt_{0.20}$	65	79	92	100	138	168	174	225	286	328	402
	FAN	$P_{tF.20}$	30	33	37	35	49	52	55	72	85	102	122
	CC	$P_{tC.20}$	65	69	72	67	74	76	186	268	361	381	417
56	---	$Pt_{0.20}$	68	75	93	108	148	160	167	213	275	320	384
	FAN	$P_{tF.20}$	30	31	35	38	50	49	53	68	82	100	116
	CC	$P_{tC.20}$	65	65	69	72	75	73	178	254	348	371	398
63	---	$Pt_{0.20}$	65	79	90	98	140	171	159	205	260	329	371
	FAN	$P_{tF.20}$	28	31	34	32	47	50	50	65	76	93	111
	CC	$P_{tC.20}$	62	66	67	62	71	74	167	242	324	348	380
71	---	$Pt_{0.20}$	62	74	85	105	133	162	152	194	250	321	355
	FAN	$P_{tF.20}$	27	30	32	35	44	47	48	62	74	90	106
	CC	$P_{tC.20}$	60	62	63	67	67	70	161	230	313	339	364
80	---	$Pt_{0.20}$	60	72	83	89	126	153	145	187	242	298	352
	FAN	$P_{tF.20}$	26	29	31	30	42	44	43	56	66	83	94
	CC	$P_{tC.20}$	57	61	61	57	64	66	146	210	284	311	324
90	---	$Pt_{0.20}$	57	68	82	96	123	145	139	178	233	290	337
	FAN	$P_{tF.20}$	25	27	31	32	41	42	42	54	64	81	91
	CC	$P_{tC.20}$	55	57	61	61	61	62	141	200	274	304	311
100	---	$Pt_{0.20}$	55	66	79	86	117	141	133	171	221	275	325
	FAN	$P_{tF.20}$	24	26	30	28	39	41	40	51	60	73	87
	CC	$P_{tC.20}$	52	56	59	54	58	60	133	191	257	273	299
112	---	$Pt_{0.20}$	53	63	73	92	113	134	128	163	213	269	312
	FAN	$P_{tF.20}$	23	25	27	31	37	39	38	49	58	71	84
	CC	$P_{tC.20}$	50	53	53	59	56	57	128	182	249	267	287
125	---	$Pt_{0.20}$	51	61	70	76	110	130	---	---	---	251	---
	FAN	$P_{tF.20}$	22	24	26	25	36	37	---	---	---	66	---
	CC	$P_{tC.20}$	48	51	51	48	54	55	---	---	---	247	---
140	---	$Pt_{0.20}$	49	58	70	82	105	126	---	---	---	245	---
	FAN	$P_{tF.20}$	21	23	26	27	34	36	---	---	---	64	---
	CC	$P_{tC.20}$	46	48	51	51	52	53	---	---	---	241	---
160	---	$Pt_{0.20}$	47	56	68	73	101	120	---	---	---	---	---
	FAN	$P_{tF.20}$	20	22	25	24	32	34	---	---	---	---	---
	CC	$P_{tC.20}$	44	47	49	46	49	51	---	---	---	---	---
180	---	$Pt_{0.20}$	37	53	54	79	96	115	---	---	---	---	---
	FAN	$P_{tF.20}$	16	21	20	26	31	33	---	---	---	---	---
	CC	$P_{tC.20}$	35	44	39	49	47	48	---	---	---	---	---
200	---	$Pt_{0.20}$	36	42	53	58	79	110	---	---	---	---	---
	FAN	$P_{tF.20}$	16	17	19	19	25	31	---	---	---	---	---
	CC	$P_{tC.20}$	34	36	38	36	38	46	---	---	---	---	---
224	---	$Pt_{0.20}$	35	40	51	61	76	91	---	---	---	---	---
	FAN	$P_{tF.20}$	15	16	19	20	24	25	---	---	---	---	---
	CC	$P_{tC.20}$	33	34	37	38	37	37	---	---	---	---	---
250	---	$Pt_{0.20}$	33	40	49	54	73	87	---	---	---	---	---
	FAN	$P_{tF.20}$	15	16	18	17	23	24	---	---	---	---	---
	CC	$P_{tC.20}$	32	34	36	33	35	36	---	---	---	---	---
280	---	$Pt_{0.20}$	32	38	49	57	70	83	---	---	---	---	---
	FAN	$P_{tF.20}$	14	15	18	19	22	23	---	---	---	---	---
	CC	$P_{tC.20}$	31	32	36	36	34	34	---	---	---	---	---
315	---	$Pt_{0.20}$	31	37	48	52	69	80	---	---	---	---	---
	FAN	$P_{tF.20}$	14	15	17	17	22	22	---	---	---	---	---
	CC	$P_{tC.20}$	30	32	35	32	33	33	---	---	---	---	---
355	---	$Pt_{0.20}$	---	36	---	55	66	79	---	---	---	---	---
	FAN	$P_{tF.20}$	---	14	---	18	21	22	---	---	---	---	---
	CC	$P_{tC.20}$	---	30	---	34	32	32	---	---	---	---	---
400	---	$Pt_{0.20}$	---	---	---	---	---	76	---	---	---	---	---
	FAN	$P_{tF.20}$	---	---	---	---	---	21	---	---	---	---	---
	CC	$P_{tC.20}$	---	---	---	---	---	31	---	---	---	---	---
450	---	$Pt_{0.20}$	---	---	---	---	---	---	---	---	---	---	---
	FAN	$P_{tF.20}$	---	---	---	---	---	---	---	---	---	---	---
	CC	$P_{tC.20}$	---	---	---	---	---	---	---	---	---	---	---

Thermal Ratings
M1/M3 Mounting - 1000 rpm
@ 40ºC = 104ºF



Nom. Ratio	Cooling Type		SK 5207/ SK 5307	SK 6207/ SK 6307	SK 7207/ SK 7307	SK 8207/ SK 8307	SK 9207/ SK 9307	SK 10207/ SK 10307	SK 11207/ SK 11307	SK 12207/ SK 12307	SK 13207/ SK 13307	SK 14207/ SK 14307	SK 15207/ SK 15307
			Thermal Power										
i_N			P_N [kW]	P_N [kW]	P_N [kW]	P_N [kW]	P_N [kW]	P_N [kW]	P_N [kW]	P_N [kW]	P_N [kW]	P_N [kW]	P_N [kW]
5,6	---	$Pt_{0.40}$	---	---	---	---	---	---	203	73	70	---	0
	FAN	$P_{tF.40}$	---	---	---	---	---	---	155	242	291	---	0
	CC	$P_{tC.20}$	---	---	---	---	---	---	564	888	1.179	---	1.064
6,3	---	$Pt_{0.40}$	---	---	---	---	---	---	201	89	98	---	0
	FAN	$P_{tF.40}$	---	---	---	---	---	---	145	218	266	---	0
	CC	$P_{tC.20}$	---	---	---	---	---	---	529	813	1.102	---	1.042
7,1	---	$Pt_{0.40}$	125	---	169	---	223	---	250	224	259	181	4
	FAN	$P_{tF.40}$	64	---	81	---	117	---	137	189	227	306	409
	CC	$P_{tC.20}$	163	---	184	---	202	---	509	756	1.016	1.166	1.313
8	---	$Pt_{0.40}$	118	149	164	177	212	275	241	217	260	198	46
	FAN	$P_{tF.40}$	60	69	78	73	109	119	129	174	213	289	371
	CC	$P_{tC.20}$	153	167	176	160	188	199	478	698	958	1.113	1.213
9	---	$Pt_{0.40}$	121	140	169	197	233	260	272	284	352	357	313
	FAN	$P_{tF.40}$	58	64	74	81	106	110	123	165	195	254	302
	CC	$P_{tC.20}$	149	155	167	176	183	185	460	672	894	1.020	1.093
10	---	$Pt_{0.40}$	115	144	163	175	220	280	260	268	341	357	314
	FAN	$P_{tF.40}$	55	63	71	67	99	107	116	152	184	244	283
	CC	$P_{tC.20}$	140	153	160	146	171	181	433	622	846	984	1.029
11,2	---	$Pt_{0.40}$	116	134	163	193	232	264	274	310	390	449	466
	FAN	$P_{tF.40}$	54	58	67	74	96	100	108	143	174	221	256
	CC	$P_{tC.20}$	138	142	153	161	166	168	407	591	809	906	955
12,5	---	$Pt_{0.40}$	110	137	157	168	219	275	260	292	374	438	447
	FAN	$P_{tF.40}$	51	58	65	61	90	97	102	134	164	212	240
	CC	$P_{tC.20}$	130	142	146	134	155	164	384	554	767	870	895
14	---	$Pt_{0.40}$	110	128	154	185	226	258	264	313	397	479	520
	FAN	$P_{tF.40}$	50	54	61	67	87	91	96	128	152	197	224
	CC	$P_{tC.20}$	127	131	138	147	151	153	363	530	715	815	843
16	---	$Pt_{0.40}$	104	129	149	158	212	264	251	292	380	465	494
	FAN	$P_{tF.40}$	47	53	58	55	81	89	91	119	145	189	210
	CC	$P_{tC.20}$	119	130	133	121	141	149	344	494	679	783	792
18	---	$Pt_{0.40}$	99	120	142	174	211	248	246	298	381	481	534
	FAN	$P_{tF.40}$	44	50	54	61	78	83	84	110	131	174	193
	CC	$P_{tC.20}$	113	121	124	133	135	140	317	460	617	723	735
20	---	$Pt_{0.40}$	94	116	137	145	198	245	233	279	365	466	507
	FAN	$P_{tF.40}$	42	48	52	50	73	79	80	103	125	167	182
	CC	$P_{tC.20}$	107	116	119	109	126	133	301	431	588	696	693
22,4	---	$Pt_{0.40}$	91	109	128	160	192	230	145	174	197	458	110
	FAN	$P_{tF.40}$	40	44	48	54	68	74	74	95	118	150	187
	CC	$P_{tC.20}$	102	108	109	119	118	125	274	392	539	628	648
25	---	$Pt_{0.40}$	87	106	124	131	181	222	143	174	198	444	141
	FAN	$P_{tF.40}$	38	43	46	44	64	69	69	90	109	145	172
	CC	$P_{tC.20}$	97	105	105	96	111	117	256	371	501	606	608
28	---	$Pt_{0.40}$	68	100	89	144	144	209	137	165	191	255	136
	FAN	$P_{tF.40}$	32	40	38	48	56	65	66	85	105	130	164
	CC	$P_{tC.20}$	82	98	87	105	97	110	245	350	481	527	580
31,5	---	$Pt_{0.40}$	65	79	87	95	137	168	159	203	244	249	269
	FAN	$P_{tF.40}$	30	34	37	36	53	57	63	82	97	118	143
	CC	$P_{tC.20}$	78	83	84	78	92	96	237	343	457	482	527
35,5	---	$Pt_{0.40}$	62	75	82	102	131	159	152	191	234	243	257
	FAN	$P_{tF.40}$	29	32	35	38	50	54	60	78	93	115	137
	CC	$P_{tC.20}$	75	79	79	84	87	91	227	324	439	469	504
40	---	$Pt_{0.40}$	60	73	80	87	124	152	146	186	224	290	256
	FAN	$P_{tF.40}$	28	31	34	33	48	51	56	74	87	106	130
	CC	$P_{tC.20}$	72	76	77	72	83	86	213	307	408	440	479
45	---	$Pt_{0.40}$	58	69	79	94	121	145	140	176	216	283	245
	FAN	$P_{tF.40}$	27	30	33	35	46	48	54	70	84	103	124
	CC	$P_{tC.20}$	69	72	76	77	80	81	204	291	393	428	458

*** Additional Cooling Necessary - Consult Factory**

Nom. Ratio	Cooling Type		SK 5207/ SK 5307	SK 6207/ SK 6307	SK 7207/ SK 7307	SK 8207/ SK 8307	SK 9207/ SK 9307	SK 10207/ SK 10307	SK 11207/ SK 11307	SK 12207/ SK 12307	SK 13207/ SK 13307	SK 14207/ SK 14307	SK 15207/ SK 15307
			Thermal Power										
i_N			P_N [kW]	P_N [kW]	P_N [kW]	P_N [kW]	P_N [kW]	P_N [kW]	P_N [kW]	P_N [kW]	P_N [kW]	P_N [kW]	P_N [kW]
50	---	$Pt_{0.40}$	55	67	77	84	116	141	145	186	235	265	324
	FAN	$P_{tF.40}$	26	29	32	31	44	47	50	66	78	95	113
	CC	$P_{tC.20}$	66	70	74	69	76	79	191	275	371	393	429
56	---	$Pt_{0.40}$	58	63	79	90	125	134	139	176	226	258	310
	FAN	$P_{tF.40}$	26	27	31	34	44	44	48	62	75	92	108
	CC	$P_{tC.20}$	66	66	71	74	77	75	183	261	357	382	410
63	---	$Pt_{0.40}$	55	67	76	82	119	144	132	169	214	272	300
	FAN	$P_{tF.40}$	25	28	30	29	42	45	45	59	70	86	103
	CC	$P_{tC.20}$	63	67	68	64	73	76	172	248	333	358	392
71	---	$Pt_{0.40}$	53	63	72	89	112	137	127	160	206	265	287
	FAN	$P_{tF.40}$	24	26	28	31	40	43	44	56	68	84	98
	CC	$P_{tC.20}$	61	64	65	68	69	72	165	236	321	348	374
80	---	$Pt_{0.40}$	51	61	70	75	107	129	122	157	202	247	292
	FAN	$P_{tF.40}$	23	25	27	26	38	40	39	51	61	77	87
	CC	$P_{tC.20}$	58	62	62	58	65	68	150	216	291	321	333
90	---	$Pt_{0.40}$	49	58	70	81	104	123	117	149	194	241	280
	FAN	$P_{tF.40}$	22	24	27	28	36	38	38	49	59	75	84
	CC	$P_{tC.20}$	56	58	62	62	63	64	144	206	281	312	320
100	---	$Pt_{0.40}$	47	56	67	72	99	120	111	144	184	231	270
	FAN	$P_{tF.40}$	21	23	26	25	35	37	36	47	55	67	80
	CC	$P_{tC.20}$	53	57	60	56	60	62	136	196	264	281	307
112	---	$Pt_{0.40}$	45	53	62	78	96	114	107	137	178	226	259
	FAN	$P_{tF.40}$	20	22	24	27	33	35	35	44	54	65	77
	CC	$P_{tC.20}$	51	54	54	60	57	59	131	187	255	274	295
125	---	$Pt_{0.40}$	43	52	60	65	94	110	---	---	---	211	---
	FAN	$P_{tF.40}$	19	21	23	22	32	33	---	---	---	61	---
	CC	$P_{tC.20}$	49	52	52	49	56	57	---	---	---	254	---
140	---	$Pt_{0.40}$	41	49	60	69	89	108	---	---	---	206	---
	FAN	$P_{tF.40}$	18	20	23	24	30	32	---	---	---	59	---
	CC	$P_{tC.20}$	47	49	52	52	53	55	---	---	---	248	---
160	---	$Pt_{0.40}$	40	48	58	62	86	102	---	---	---	---	---
	FAN	$P_{tF.40}$	17	19	22	21	29	31	---	---	---	---	---
	CC	$P_{tC.20}$	45	48	50	47	50	52	---	---	---	---	---
180	---	$Pt_{0.40}$	31	45	46	67	82	98	---	---	---	---	---
	FAN	$P_{tF.40}$	14	18	18	23	28	29	---	---	---	---	---
	CC	$P_{tC.20}$	36	45	40	50	48	50	---	---	---	---	---
200	---	$Pt_{0.40}$	30	36	45	49	68	94	---	---	---	---	---
	FAN	$P_{tF.40}$	13	15	17	17	22	28	---	---	---	---	---
	CC	$P_{tC.20}$	35	37	39	37	39	47	---	---	---	---	---
224	---	$Pt_{0.40}$	29	34	43	52	65	77	---	---	---	---	---
	FAN	$P_{tF.40}$	13	14	16	18	22	23	---	---	---	---	---
	CC	$P_{tC.20}$	34	35	37	39	38	38	---	---	---	---	---
250	---	$Pt_{0.40}$	28	34	42	45	62	74	---	---	---	---	---
	FAN	$P_{tF.40}$	13	14	16	15	21	22	---	---	---	---	---
	CC	$P_{tC.20}$	33	34	36	34	36	37	---	---	---	---	---
280	---	$Pt_{0.40}$	28	32	42	48	60	71	---	---	---	---	---
	FAN	$P_{tF.40}$	12	13	16	16	20	21	---	---	---	---	---
	CC	$P_{tC.20}$	32	33	36	36	35	35	---	---	---	---	---
315	---	$Pt_{0.40}$	27	32	41	44	59	68	---	---	---	---	---
	FAN	$P_{tF.40}$	12	13	15	15	19	20	---	---	---	---	---
	CC	$P_{tC.20}$	30	32	35	33	34	34	---	---	---	---	---
355	---	$Pt_{0.40}$	---	30	---	47	57	67	---	---	---	---	---
	FAN	$P_{tF.40}$	---	12	---	16	19	20	---	---	---	---	---
	CC	$P_{tC.20}$	---	31	---	35	33	33	---	---	---	---	---
400	---	$Pt_{0.40}$	---	---	---	---	---	65	---	---	---	---	---
	FAN	$P_{tF.40}$	---	---	---	---	---	19	---	---	---	---	---
	CC	$P_{tC.20}$	---	---	---	---	---	32	---	---	---	---	---
450	---	$Pt_{0.40}$	---	---	---	---	---	---	---	---	---	---	---
	FAN	$P_{tF.40}$	---	---	---	---	---	---	---	---	---	---	---
	CC	$P_{tC.20}$	---	---	---	---	---	---	---	---	---	---	---

Thermal Ratings
M1/M3 Mounting - 1200 rpm
@ 20°C = 68°F



Nom. Ratio	Cooling Type		SK 5207/ SK 5307	SK 6207/ SK 6307	SK 7207/ SK 7307	SK 8207/ SK 8307	SK 9207/ SK 9307	SK 10207/ SK 10307	SK 11207/ SK 11307	SK 12207/ SK 12307	SK 13207/ SK 13307	SK 14207/ SK 14307	SK 15207/ SK 15307
			Thermal Power										
i_N			P_N [kW]	P_N [kW]	P_N [kW]	P_N [kW]	P_N [kW]	P_N [kW]	P_N [kW]	P_N [kW]	P_N [kW]	P_N [kW]	P_N [kW]
5,6	---	$Pt_{0.20}$	---	---	---	---	---	---	185	*	*	---	*
	FAN	$P_{tF.20}$	---	---	---	---	---	---	190	257	266	---	*
	CC	$P_{tC.20}$	---	---	---	---	---	---	605	933	1.209	---	721
6,3	---	$Pt_{0.20}$	---	---	---	---	---	---	189	*	*	---	*
	FAN	$P_{tF.20}$	---	---	---	---	---	---	177	262	288	---	*
	CC	$P_{tC.20}$	---	---	---	---	---	---	566	883	1.171	---	747
7,1	---	$Pt_{0.20}$	147	---	195	---	249	---	264	191	200	*	*
	FAN	$P_{tF.20}$	78	---	98	---	141	---	166	234	282	414	217
	CC	$P_{tC.20}$	169	---	191	---	212	---	538	814	1.099	1.315	1.196
8	---	$Pt_{0.20}$	140	178	190	208	238	314	257	191	213	32	*
	FAN	$P_{tF.20}$	73	83	94	88	132	141	155	214	263	396	256
	CC	$P_{tC.20}$	160	174	183	167	197	208	506	750	1.033	1.257	1.158
9	---	$Pt_{0.20}$	145	167	199	232	270	298	306	295	361	320	199
	FAN	$P_{tF.20}$	71	77	89	96	127	131	147	199	233	309	382
	CC	$P_{tC.20}$	154	161	174	183	191	193	483	712	949	1.095	1.197
10	---	$Pt_{0.20}$	137	173	193	208	255	329	293	281	353	328	218
	FAN	$P_{tF.20}$	67	76	85	80	118	127	138	183	220	297	355
	CC	$P_{tC.20}$	146	159	167	152	178	188	455	659	898	1.055	1.122
11,2	---	$Pt_{0.20}$	140	162	195	231	274	310	318	346	430	478	467
	FAN	$P_{tF.20}$	65	70	81	88	115	118	128	171	206	263	306
	CC	$P_{tC.20}$	143	147	158	167	173	175	425	622	852	959	1.015
12,5	---	$Pt_{0.20}$	133	166	188	202	258	328	303	327	415	470	453
	FAN	$P_{tF.20}$	62	70	78	73	107	115	121	160	195	252	286
	CC	$P_{tC.20}$	135	147	152	138	161	170	402	582	807	919	950
14	---	$Pt_{0.20}$	132	155	185	223	269	308	312	361	456	540	571
	FAN	$P_{tF.20}$	60	65	73	80	104	107	114	151	179	232	263
	CC	$P_{tC.20}$	131	136	143	152	157	159	379	555	749	856	886
16	---	$Pt_{0.20}$	125	156	179	191	253	318	297	338	437	526	546
	FAN	$P_{tF.20}$	57	64	70	66	97	104	108	141	170	223	247
	CC	$P_{tC.20}$	124	135	137	126	147	154	359	517	712	823	833
18	---	$Pt_{0.20}$	120	146	172	210	254	298	293	351	448	560	615
	FAN	$P_{tF.20}$	53	60	65	72	93	98	99	130	153	203	226
	CC	$P_{tC.20}$	117	125	128	138	139	144	330	480	644	757	768
20	---	$Pt_{0.20}$	114	141	166	177	239	297	279	329	429	543	584
	FAN	$P_{tF.20}$	51	57	63	59	87	93	94	122	146	196	213
	CC	$P_{tC.20}$	111	120	123	113	131	138	314	450	614	728	724
22,4	---	$Pt_{0.20}$	111	132	156	194	232	279	158	184	194	544	*
	FAN	$P_{tF.20}$	48	53	57	65	81	87	88	115	142	175	244
	CC	$P_{tC.20}$	106	112	113	123	122	129	289	415	575	655	729
25	---	$Pt_{0.20}$	105	129	151	160	219	270	157	188	202	527	47
	FAN	$P_{tF.20}$	46	52	55	52	76	81	82	108	131	169	231
	CC	$P_{tC.20}$	100	109	109	100	115	121	270	392	533	631	686
28	---	$Pt_{0.20}$	81	121	106	175	171	254	151	178	195	267	49
	FAN	$P_{tF.20}$	39	48	46	57	67	77	79	102	125	155	219
	CC	$P_{tC.20}$	85	101	90	108	101	113	259	370	511	559	653
31,5	---	$Pt_{0.20}$	78	95	103	114	163	202	185	233	276	266	272
	FAN	$P_{tF.20}$	37	41	44	43	64	67	75	98	115	141	171
	CC	$P_{tC.20}$	81	86	87	81	96	99	248	359	480	511	562
35,5	---	$Pt_{0.20}$	75	90	98	122	156	191	177	220	266	260	261
	FAN	$P_{tF.20}$	36	39	42	46	60	64	71	92	110	137	163
	CC	$P_{tC.20}$	78	81	82	87	90	94	237	339	461	497	537
40	---	$Pt_{0.20}$	72	88	95	105	148	183	170	215	256	334	264
	FAN	$P_{tF.20}$	34	38	41	39	57	60	67	87	102	125	155
	CC	$P_{tC.20}$	75	79	80	74	86	89	222	321	428	462	509
45	---	$Pt_{0.20}$	69	83	95	113	145	174	163	203	246	326	253
	FAN	$P_{tF.20}$	33	36	40	42	55	57	64	83	98	121	148
	CC	$P_{tC.20}$	72	75	79	80	83	84	213	304	412	449	487

*** Additional Cooling Necessary - Consult Factory**

Nom. Ratio	Cooling Type		SK 5207/ SK 5307	SK 6207/ SK 6307	SK 7207/ SK 7307	SK 8207/ SK 8307	SK 9207/ SK 9307	SK 10207/ SK 10307	SK 11207/ SK 11307	SK 12207/ SK 12307	SK 13207/ SK 13307	SK 14207/ SK 14307	SK 15207/ SK 15307
			Thermal Power										
i_N			P_N [kW]	P_N [kW]	P_N [kW]	P_N [kW]	P_N [kW]	P_N [kW]	P_N [kW]	P_N [kW]	P_N [kW]	P_N [kW]	P_N [kW]
50	---	$Pt_{0.20}$	66	81	92	101	138	170	172	220	277	307	376
	FAN	$P_{tF.20}$	31	35	39	37	52	55	59	77	92	111	132
	CC	$P_{tC.20}$	68	73	76	71	79	82	199	287	388	411	448
56	---	$Pt_{0.20}$	70	76	95	109	152	162	165	208	267	299	359
	FAN	$P_{tF.20}$	31	33	37	40	53	52	57	73	88	108	126
	CC	$P_{tC.20}$	69	69	73	76	80	78	191	272	373	401	428
63	---	$Pt_{0.20}$	67	81	92	100	144	176	158	201	252	324	349
	FAN	$P_{tF.20}$	30	33	36	34	50	53	54	70	82	100	120
	CC	$P_{tC.20}$	66	70	71	66	76	78	179	259	348	373	409
71	---	$Pt_{0.20}$	64	77	87	108	136	167	151	191	243	315	334
	FAN	$P_{tF.20}$	29	31	34	37	47	50	52	66	79	97	115
	CC	$P_{tC.20}$	63	66	67	71	71	74	172	246	335	363	391
80	---	$Pt_{0.20}$	61	74	85	92	130	158	147	189	242	294	349
	FAN	$P_{tF.20}$	27	30	33	31	45	47	46	60	71	90	101
	CC	$P_{tC.20}$	60	64	65	60	68	70	156	224	303	334	346
90	---	$Pt_{0.20}$	59	70	84	99	126	150	141	179	234	287	335
	FAN	$P_{tF.20}$	26	29	33	34	43	45	45	57	69	87	97
	CC	$P_{tC.20}$	58	60	64	65	65	66	150	214	293	326	332
100	---	$Pt_{0.20}$	57	68	81	88	120	146	134	173	221	279	323
	FAN	$P_{tF.20}$	25	28	32	30	41	43	42	55	65	78	93
	CC	$P_{tC.20}$	55	59	62	58	62	64	141	204	275	292	319
112	---	$Pt_{0.20}$	55	65	75	95	117	138	129	164	214	272	310
	FAN	$P_{tF.20}$	24	26	28	32	39	41	41	52	62	76	89
	CC	$P_{tC.20}$	53	56	56	62	59	61	136	195	265	285	306
125	---	$Pt_{0.20}$	52	63	73	79	114	135	---	---	---	254	---
	FAN	$P_{tF.20}$	23	25	27	26	38	39	---	---	---	71	---
	CC	$P_{tC.20}$	50	53	54	50	57	58	---	---	---	264	---
140	---	$Pt_{0.20}$	50	60	73	85	109	131	---	---	---	248	---
	FAN	$P_{tF.20}$	22	24	27	28	36	38	---	---	---	69	---
	CC	$P_{tC.20}$	48	51	54	54	55	56	---	---	---	258	---
160	---	$Pt_{0.20}$	48	58	70	76	105	125	---	---	---	---	---
	FAN	$P_{tF.20}$	21	23	26	25	34	36	---	---	---	---	---
	CC	$P_{tC.20}$	46	49	52	48	52	54	---	---	---	---	---
180	---	$Pt_{0.20}$	38	55	56	81	100	120	---	---	---	---	---
	FAN	$P_{tF.20}$	17	22	21	27	33	35	---	---	---	---	---
	CC	$P_{tC.20}$	37	47	42	52	50	51	---	---	---	---	---
200	---	$Pt_{0.20}$	37	44	55	60	83	114	---	---	---	---	---
	FAN	$P_{tF.20}$	16	18	20	20	27	33	---	---	---	---	---
	CC	$P_{tC.20}$	36	38	40	38	40	49	---	---	---	---	---
224	---	$Pt_{0.20}$	36	42	53	63	80	95	---	---	---	---	---
	FAN	$P_{tF.20}$	16	17	20	21	26	27	---	---	---	---	---
	CC	$P_{tC.20}$	35	36	39	40	39	39	---	---	---	---	---
250	---	$Pt_{0.20}$	35	41	51	56	76	91	---	---	---	---	---
	FAN	$P_{tF.20}$	15	17	19	18	25	26	---	---	---	---	---
	CC	$P_{tC.20}$	34	35	38	35	37	38	---	---	---	---	---
280	---	$Pt_{0.20}$	33	39	51	59	73	87	---	---	---	---	---
	FAN	$P_{tF.20}$	15	16	19	20	24	25	---	---	---	---	---
	CC	$P_{tC.20}$	33	34	37	37	36	36	---	---	---	---	---
315	---	$Pt_{0.20}$	32	38	50	54	72	84	---	---	---	---	---
	FAN	$P_{tF.20}$	14	16	18	18	23	24	---	---	---	---	---
	CC	$P_{tC.20}$	31	33	36	34	35	35	---	---	---	---	---
355	---	$Pt_{0.20}$	---	37	---	57	69	82	---	---	---	---	---
	FAN	$P_{tF.20}$	---	15	---	19	22	23	---	---	---	---	---
	CC	$P_{tC.20}$	---	32	---	36	34	34	---	---	---	---	---
400	---	$Pt_{0.20}$	---	---	---	---	---	79	---	---	---	---	---
	FAN	$P_{tF.20}$	---	---	---	---	---	22	---	---	---	---	---
	CC	$P_{tC.20}$	---	---	---	---	---	33	---	---	---	---	---
450	---	$Pt_{0.20}$	---	---	---	---	---	---	---	---	---	---	---
	FAN	$P_{tF.20}$	---	---	---	---	---	---	---	---	---	---	---
	CC	$P_{tC.20}$	---	---	---	---	---	---	---	---	---	---	---

Thermal Ratings
M1/M3 Mounting - 1200 rpm
@ 40°C = 104°F

Nom. Ratio	Cooling Type		SK 5207/ SK 5307	SK 6207/ SK 6307	SK 7207/ SK 7307	SK 8207/ SK 8307	SK 9207/ SK 9307	SK 10207/ SK 10307	SK 11207/ SK 11307	SK 12207/ SK 12307	SK 13207/ SK 13307	SK 14207/ SK 14307	SK 15207/ SK 15307
			Thermal Power										
i_N			P_N [kW]	P_N [kW]	P_N [kW]	P_N [kW]	P_N [kW]	P_N [kW]	P_N [kW]	P_N [kW]	P_N [kW]	P_N [kW]	P_N [kW]
5,6	---	$Pt_{0.40}$	---	---	---	---	---	---	63	*	*	---	*
	FAN	$P_{tF.40}$	---	---	---	---	---	---	195	55	*	---	*
	CC	$P_{tC.20}$	---	---	---	---	---	---	651	830	1.076	---	470
6,3	---	$Pt_{0.40}$	---	---	---	---	---	---	79	*	*	---	*
	FAN	$P_{tF.40}$	---	---	---	---	---	---	179	83	44	---	*
	CC	$P_{tC.20}$	---	---	---	---	---	---	605	787	1.046	---	517
7,1	---	$Pt_{0.40}$	120	---	154	---	182	---	171	34	*	*	*
	FAN	$P_{tF.40}$	68	---	88	---	129	---	156	247	294	138	*
	CC	$P_{tC.20}$	173	---	198	---	221	---	563	880	1.180	1.157	995
8	---	$Pt_{0.40}$	114	146	151	167	176	238	170	50	13	*	*
	FAN	$P_{tF.40}$	64	73	84	79	120	129	146	223	287	173	*
	CC	$P_{tC.20}$	163	178	189	172	206	217	528	807	1.121	1.137	971
9	---	$Pt_{0.40}$	120	137	162	186	211	228	225	181	210	96	*
	FAN	$P_{tF.40}$	62	68	79	87	115	120	136	189	225	323	318
	CC	$P_{tC.20}$	158	165	179	189	198	201	501	745	994	1.178	1.221
10	---	$Pt_{0.40}$	114	144	157	171	200	261	218	176	213	117	*
	FAN	$P_{tF.40}$	58	67	76	72	107	116	128	174	212	305	328
	CC	$P_{tC.20}$	149	162	172	156	185	195	472	689	938	1.129	1.175
11,2	---	$Pt_{0.40}$	117	135	161	189	221	247	249	251	301	310	260
	FAN	$P_{tF.40}$	57	62	72	79	103	108	118	159	194	251	298
	CC	$P_{tC.20}$	146	150	163	172	179	181	440	645	885	1.001	1.068
12,5	---	$Pt_{0.40}$	111	140	156	168	209	267	237	239	293	309	260
	FAN	$P_{tF.40}$	54	62	69	65	96	105	111	149	184	240	277
	CC	$P_{tC.20}$	137	150	156	142	167	176	415	604	838	959	998
14	---	$Pt_{0.40}$	111	130	155	185	222	251	251	277	346	394	399
	FAN	$P_{tF.40}$	52	57	65	72	93	97	104	140	167	218	249
	CC	$P_{tC.20}$	134	139	147	156	162	164	391	573	774	888	922
16	---	$Pt_{0.40}$	106	132	150	160	209	263	239	260	332	386	384
	FAN	$P_{tF.40}$	49	56	62	59	87	95	99	130	159	209	234
	CC	$P_{tC.20}$	126	138	141	129	151	159	370	534	736	852	866
18	---	$Pt_{0.40}$	102	123	145	176	212	247	240	279	355	434	469
	FAN	$P_{tF.40}$	47	52	58	65	83	88	90	120	142	189	211
	CC	$P_{tC.20}$	119	128	131	141	144	149	340	496	664	781	794
20	---	$Pt_{0.40}$	97	120	140	149	199	248	228	262	340	422	447
	FAN	$P_{tF.40}$	44	50	56	53	78	84	86	112	135	182	199
	CC	$P_{tC.20}$	113	123	126	116	135	142	323	464	633	752	749
22,4	---	$Pt_{0.40}$	94	112	132	164	195	233	109	119	102	436	*
	FAN	$P_{tF.40}$	42	47	51	58	72	79	83	108	139	162	68
	CC	$P_{tC.20}$	108	114	115	126	126	133	301	432	604	674	627
25	---	$Pt_{0.40}$	89	110	128	136	184	227	112	126	118	423	*
	FAN	$P_{tF.40}$	40	45	49	47	68	74	77	102	126	156	124
	CC	$P_{tC.20}$	102	111	111	102	118	124	281	408	558	650	637
28	---	$Pt_{0.40}$	68	103	87	148	140	214	107	120	115	167	*
	FAN	$P_{tF.40}$	34	42	41	51	60	69	73	96	121	149	121
	CC	$P_{tC.20}$	87	103	92	111	104	117	269	385	535	586	610
31,5	---	$Pt_{0.40}$	65	79	85	94	133	166	144	179	205	176	155
	FAN	$P_{tF.40}$	32	36	39	38	57	61	69	90	107	135	168
	CC	$P_{tC.20}$	83	88	89	83	99	103	256	371	496	534	594
35,5	---	$Pt_{0.40}$	63	75	81	101	128	158	138	169	198	172	149
	FAN	$P_{tF.40}$	31	34	37	41	54	58	66	85	103	131	160
	CC	$P_{tC.20}$	80	83	84	89	93	97	245	350	476	520	567
40	---	$Pt_{0.40}$	60	73	79	87	122	151	134	167	193	256	160
	FAN	$P_{tF.40}$	30	33	36	35	51	54	61	81	96	117	150
	CC	$P_{tC.20}$	76	81	82	76	89	92	229	332	443	478	537
45	---	$Pt_{0.40}$	58	70	78	93	120	144	128	157	185	250	154
	FAN	$P_{tF.40}$	29	31	36	37	49	52	59	76	92	114	143
	CC	$P_{tC.20}$	73	77	81	81	86	87	220	314	426	465	513

*** Additional Cooling Necessary - Consult Factory**

Nom. Ratio	Cooling Type		SK 5207/ SK 5307	SK 6207/ SK 6307	SK 7207/ SK 7307	SK 8207/ SK 8307	SK 9207/ SK 9307	SK 10207/ SK 10307	SK 11207/ SK 11307	SK 12207/ SK 12307	SK 13207/ SK 13307	SK 14207/ SK 14307	SK 15207/ SK 15307
			Thermal Power										
i_N			P_N [kW]	P_N [kW]	P_N [kW]	P_N [kW]	P_N [kW]	P_N [kW]	P_N [kW]	P_N [kW]	P_N [kW]	P_N [kW]	P_N [kW]
50	---	$Pt_{0.40}$	55	68	76	84	114	141	140	178	221	237	291
	FAN	$P_{tF.40}$	27	30	34	33	47	50	54	71	85	104	123
	CC	$P_{tC.20}$	70	74	78	73	82	84	205	296	399	426	463
56	---	$Pt_{0.40}$	59	64	80	90	128	134	135	168	213	232	279
	FAN	$P_{tF.40}$	27	29	33	36	47	47	52	67	82	101	117
	CC	$P_{tC.20}$	70	70	75	78	82	80	196	280	384	415	443
63	---	$Pt_{0.40}$	57	69	78	84	121	148	129	163	202	262	272
	FAN	$P_{tF.40}$	26	29	32	31	45	48	49	64	76	93	112
	CC	$P_{tC.20}$	67	71	72	67	78	81	185	266	358	384	422
71	---	$Pt_{0.40}$	54	65	74	91	115	140	123	154	195	255	260
	FAN	$P_{tF.40}$	25	28	30	33	42	45	47	61	73	90	107
	CC	$P_{tC.20}$	64	67	68	72	73	77	177	253	345	374	404
80	---	$Pt_{0.40}$	52	63	71	77	109	133	122	156	199	239	284
	FAN	$P_{tF.40}$	24	27	29	28	40	43	42	55	66	83	94
	CC	$P_{tC.20}$	61	65	66	61	70	72	160	231	311	344	356
90	---	$Pt_{0.40}$	50	60	71	83	106	126	117	148	192	233	273
	FAN	$P_{tF.40}$	23	25	29	30	39	41	41	52	63	81	90
	CC	$P_{tC.20}$	59	62	66	66	67	68	154	220	300	336	342
100	---	$Pt_{0.40}$	48	58	68	74	101	123	112	143	182	231	264
	FAN	$P_{tF.40}$	22	25	28	27	37	39	38	50	60	72	86
	CC	$P_{tC.20}$	56	60	63	59	64	66	146	210	282	300	328
112	---	$Pt_{0.40}$	46	55	64	80	99	117	107	136	176	226	254
	FAN	$P_{tF.40}$	21	23	25	29	35	37	37	48	58	70	83
	CC	$P_{tC.20}$	54	57	57	63	61	63	140	200	273	293	315
125	---	$Pt_{0.40}$	44	54	62	67	97	114	---	---	---	211	---
	FAN	$P_{tF.40}$	20	22	24	23	34	36	---	---	---	65	---
	CC	$P_{tC.20}$	51	55	55	51	59	60	---	---	---	272	---
140	---	$Pt_{0.40}$	43	51	61	71	92	111	---	---	---	206	---
	FAN	$P_{tF.40}$	19	21	24	25	32	34	---	---	---	64	---
	CC	$P_{tC.20}$	49	52	55	55	56	58	---	---	---	265	---
160	---	$Pt_{0.40}$	41	49	59	64	89	106	---	---	---	---	---
	FAN	$P_{tF.40}$	18	21	23	22	31	33	---	---	---	---	---
	CC	$P_{tC.20}$	47	50	53	49	53	55	---	---	---	---	---
180	---	$Pt_{0.40}$	32	47	48	69	85	102	---	---	---	---	---
	FAN	$P_{tF.40}$	15	19	18	24	29	31	---	---	---	---	---
	CC	$P_{tC.20}$	38	48	42	53	51	53	---	---	---	---	---
200	---	$Pt_{0.40}$	31	37	47	51	71	97	---	---	---	---	---
	FAN	$P_{tF.40}$	14	16	18	18	24	30	---	---	---	---	---
	CC	$P_{tC.20}$	36	38	41	39	41	50	---	---	---	---	---
224	---	$Pt_{0.40}$	30	35	44	54	68	81	---	---	---	---	---
	FAN	$P_{tF.40}$	14	15	17	19	23	24	---	---	---	---	---
	CC	$P_{tC.20}$	35	37	39	41	40	41	---	---	---	---	---
250	---	$Pt_{0.40}$	29	35	43	47	65	78	---	---	---	---	---
	FAN	$P_{tF.40}$	13	15	17	16	22	23	---	---	---	---	---
	CC	$P_{tC.20}$	34	36	38	36	38	39	---	---	---	---	---
280	---	$Pt_{0.40}$	28	33	43	50	63	74	---	---	---	---	---
	FAN	$P_{tF.40}$	13	14	17	17	21	22	---	---	---	---	---
	CC	$P_{tC.20}$	33	34	38	38	37	37	---	---	---	---	---
315	---	$Pt_{0.40}$	27	33	42	46	61	71	---	---	---	---	---
	FAN	$P_{tF.40}$	12	14	16	16	21	21	---	---	---	---	---
	CC	$P_{tC.20}$	32	34	37	35	36	36	---	---	---	---	---
355	---	$Pt_{0.40}$	---	31	---	48	59	70	---	---	---	---	---
	FAN	$P_{tF.40}$	---	13	---	17	20	21	---	---	---	---	---
	CC	$P_{tC.20}$	---	32	---	37	35	35	---	---	---	---	---
400	---	$Pt_{0.40}$	---	---	---	---	---	67	---	---	---	---	---
	FAN	$P_{tF.40}$	---	---	---	---	---	20	---	---	---	---	---
	CC	$P_{tC.20}$	---	---	---	---	---	34	---	---	---	---	---
450	---	$Pt_{0.40}$	---	---	---	---	---	---	---	---	---	---	---
	FAN	$P_{tF.40}$	---	---	---	---	---	---	---	---	---	---	---
	CC	$P_{tC.20}$	---	---	---	---	---	---	---	---	---	---	---

Thermal Ratings
M1/M3 Mounting - 1500 rpm
@ 20°C = 68°F



Nom. Ratio	Cooling Type		SK 5207/ SK 5307	SK 6207/ SK 6307	SK 7207/ SK 7307	SK 8207/ SK 8307	SK 9207/ SK 9307	SK 10207/ SK 10307	SK 11207/ SK 11307	SK 12207/ SK 12307	SK 13207/ SK 13307	SK 14207/ SK 14307	SK 15207/ SK 15307
			Thermal Power										
i_N			P_N [kW]	P_N [kW]	P_N [kW]	P_N [kW]	P_N [kW]	P_N [kW]	P_N [kW]	P_N [kW]	P_N [kW]	P_N [kW]	P_N [kW]
5,6	---	$Pt_{0.20}$	---	---	---	---	---	---	*	*	*	---	*
	FAN	$P_{tF.20}$	---	---	---	---	---	---	158	*	*	---	*
	CC	$P_{tC.20}$	---	---	---	---	---	---	654	621	797	---	*
6,3	---	$Pt_{0.20}$	---	---	---	---	---	---	*	*	*	---	*
	FAN	$P_{tF.20}$	---	---	---	---	---	---	175	*	*	---	*
	CC	$P_{tC.20}$	---	---	---	---	---	---	635	608	803	---	*
7,1	---	$Pt_{0.20}$	136	---	163	---	162	---	89	*	*	*	*
	FAN	$P_{tF.20}$	85	---	109	---	163	---	212	128	26	*	*
	CC	$P_{tC.20}$	184	---	211	---	242	---	637	834	1.058	863	436
8	---	$Pt_{0.20}$	130	169	161	184	162	236	103	*	*	*	*
	FAN	$P_{tF.20}$	80	90	104	97	151	160	194	147	73	*	*
	CC	$P_{tC.20}$	173	188	202	183	224	234	593	790	1.029	872	481
9	---	$Pt_{0.20}$	140	159	182	205	220	230	206	59	32	*	*
	FAN	$P_{tF.20}$	76	84	98	106	142	148	170	265	323	198	*
	CC	$P_{tC.20}$	167	174	190	201	212	217	546	853	1.149	1.153	959
10	---	$Pt_{0.20}$	134	171	178	196	212	285	203	73	59	*	*
	FAN	$P_{tF.20}$	72	82	94	87	132	141	160	240	297	227	*
	CC	$P_{tC.20}$	157	171	182	166	198	208	513	784	1.075	1.138	943
11,2	---	$Pt_{0.20}$	139	160	187	218	247	272	262	220	242	173	*
	FAN	$P_{tF.20}$	70	76	88	96	126	131	145	200	245	330	417
	CC	$P_{tC.20}$	154	158	172	182	190	193	473	705	972	1.124	1.242
12,5	---	$Pt_{0.20}$	132	167	182	198	234	305	252	214	243	187	14
	FAN	$P_{tF.20}$	66	75	84	79	118	126	136	186	231	314	402
	CC	$P_{tC.20}$	145	157	165	150	177	186	446	659	919	1.074	1.173
14	---	$Pt_{0.20}$	134	157	184	219	257	289	279	284	346	359	315
	FAN	$P_{tF.20}$	64	70	79	87	113	118	127	172	205	270	312
	CC	$P_{tC.20}$	141	146	155	165	171	174	417	618	837	967	1.014
16	---	$Pt_{0.20}$	127	159	178	192	243	310	267	268	336	356	312
	FAN	$P_{tF.20}$	61	69	76	71	106	114	120	160	194	258	292
	CC	$P_{tC.20}$	133	144	149	136	160	168	395	576	794	928	951
18	---	$Pt_{0.20}$	123	149	174	212	251	292	277	308	389	456	476
	FAN	$P_{tF.20}$	57	64	70	78	100	106	109	146	171	229	256
	CC	$P_{tC.20}$	125	134	138	149	151	157	361	530	711	840	855
20	---	$Pt_{0.20}$	117	146	168	181	237	298	264	289	374	445	457
	FAN	$P_{tF.20}$	54	61	68	64	94	101	104	136	163	220	241
	CC	$P_{tC.20}$	119	128	133	121	142	149	343	496	678	808	806
22,4	---	$Pt_{0.20}$	114	137	160	198	235	280	80	63	*	491	*
	FAN	$P_{tF.20}$	52	57	62	70	88	94	106	145	175	194	*
	CC	$P_{tC.20}$	113	120	121	133	132	140	334	487	679	718	417
25	---	$Pt_{0.20}$	109	134	155	166	222	276	92	84	15	477	*
	FAN	$P_{tF.20}$	49	55	60	56	82	88	98	133	183	187	*
	CC	$P_{tC.20}$	107	116	117	107	124	130	309	454	647	693	465
28	---	$Pt_{0.20}$	80	126	101	181	161	260	89	81	17	68	*
	FAN	$P_{tF.20}$	42	52	50	61	74	83	93	125	175	204	*
	CC	$P_{tC.20}$	91	108	97	117	111	122	296	429	620	671	448
31,5	---	$Pt_{0.20}$	77	94	98	111	153	194	152	183	194	106	*
	FAN	$P_{tF.20}$	40	44	48	46	70	73	84	111	133	177	249
	CC	$P_{tC.20}$	87	93	94	88	105	108	275	400	539	601	709
35,5	---	$Pt_{0.20}$	74	90	94	119	148	184	146	173	188	105	2
	FAN	$P_{tF.20}$	38	42	45	49	66	70	80	104	127	172	238
	CC	$P_{tC.20}$	84	88	89	94	99	103	263	377	517	584	677
40	---	$Pt_{0.20}$	71	87	92	103	141	178	143	173	188	260	44
	FAN	$P_{tF.20}$	37	41	44	42	62	65	75	99	118	143	211
	CC	$P_{tC.20}$	80	85	86	80	94	97	246	357	480	517	625
45	---	$Pt_{0.20}$	68	83	91	110	139	169	137	164	181	254	44
	FAN	$P_{tF.20}$	35	38	43	45	60	62	72	93	113	139	201
	CC	$P_{tC.20}$	77	81	85	86	91	92	236	338	462	502	596

*** Additional Cooling Necessary - Consult Factory**

Nom. Ratio	Cooling Type		SK 5207/ SK 5307	SK 6207/ SK 6307	SK 7207/ SK 7307	SK 8207/ SK 8307	SK 9207/ SK 9307	SK 10207/ SK 10307	SK 11207/ SK 11307	SK 12207/ SK 12307	SK 13207/ SK 13307	SK 14207/ SK 14307	SK 15207/ SK 15307
			Thermal Power										
i_N			P_N [kW]	P_N [kW]	P_N [kW]	P_N [kW]	P_N [kW]	P_N [kW]	P_N [kW]	P_N [kW]	P_N [kW]	P_N [kW]	P_N [kW]
50	---	$Pt_{0.20}$	66	81	89	99	132	166	161	201	246	246	302
	FAN	$P_{tF.20}$	34	37	42	40	57	60	65	86	102	127	149
	CC	$P_{tC.20}$	74	78	82	77	86	89	217	315	426	460	498
56	---	$Pt_{0.20}$	72	77	96	106	153	158	155	190	237	240	290
	FAN	$P_{tF.20}$	34	35	40	43	57	57	63	81	98	123	142
	CC	$P_{tC.20}$	73	74	79	82	86	84	208	298	410	448	476
63	---	$Pt_{0.20}$	69	83	93	102	146	179	148	185	226	298	286
	FAN	$P_{tF.20}$	32	36	39	37	54	57	59	77	92	111	135
	CC	$P_{tC.20}$	70	75	76	71	82	85	196	284	382	410	453
71	---	$Pt_{0.20}$	66	79	89	110	138	170	142	175	218	290	274
	FAN	$P_{tF.20}$	31	34	36	40	51	54	57	73	88	108	129
	CC	$P_{tC.20}$	67	71	72	76	77	80	188	269	368	399	434
80	---	$Pt_{0.20}$	63	76	86	94	131	161	144	184	233	272	329
	FAN	$P_{tF.20}$	29	33	35	34	48	51	51	66	78	99	111
	CC	$P_{tC.20}$	64	69	69	64	73	76	169	244	329	367	377
90	---	$Pt_{0.20}$	60	72	85	101	128	153	139	175	225	266	316
	FAN	$P_{tF.20}$	28	31	35	36	47	48	49	63	75	97	106
	CC	$P_{tC.20}$	62	65	69	69	71	72	163	232	318	358	362
100	---	$Pt_{0.20}$	58	70	83	90	122	149	133	169	214	274	306
	FAN	$P_{tF.20}$	27	30	34	32	45	47	46	60	71	85	102
	CC	$P_{tC.20}$	59	63	67	62	67	69	154	222	299	317	348
112	---	$Pt_{0.20}$	56	67	77	97	121	142	128	161	207	267	294
	FAN	$P_{tF.20}$	26	28	30	35	42	45	44	57	68	83	98
	CC	$P_{tC.20}$	56	59	60	67	64	66	148	212	289	310	334
125	---	$Pt_{0.20}$	54	65	75	82	117	140	---	---	---	250	---
	FAN	$P_{tF.20}$	25	27	29	28	41	42	---	---	---	77	---
	CC	$P_{tC.20}$	54	57	58	54	62	63	---	---	---	287	---
140	---	$Pt_{0.20}$	52	62	75	88	112	136	---	---	---	245	---
	FAN	$P_{tF.20}$	24	26	29	30	39	41	---	---	---	75	---
	CC	$P_{tC.20}$	52	54	58	58	59	61	---	---	---	281	---
160	---	$Pt_{0.20}$	50	60	72	79	109	129	---	---	---	---	---
	FAN	$P_{tF.20}$	23	25	28	27	37	39	---	---	---	---	---
	CC	$P_{tC.20}$	50	53	56	52	56	58	---	---	---	---	---
180	---	$Pt_{0.20}$	39	57	58	84	104	125	---	---	---	---	---
	FAN	$P_{tF.20}$	18	24	22	29	35	37	---	---	---	---	---
	CC	$P_{tC.20}$	39	50	44	56	53	55	---	---	---	---	---
200	---	$Pt_{0.20}$	38	45	57	62	87	119	---	---	---	---	---
	FAN	$P_{tF.20}$	17	19	22	21	29	35	---	---	---	---	---
	CC	$P_{tC.20}$	38	40	43	40	43	52	---	---	---	---	---
224	---	$Pt_{0.20}$	37	43	54	66	83	99	---	---	---	---	---
	FAN	$P_{tF.20}$	17	18	21	22	28	29	---	---	---	---	---
	CC	$P_{tC.20}$	37	38	41	43	42	42	---	---	---	---	---
250	---	$Pt_{0.20}$	36	42	53	58	80	96	---	---	---	---	---
	FAN	$P_{tF.20}$	16	18	20	20	26	28	---	---	---	---	---
	CC	$P_{tC.20}$	36	38	40	38	40	41	---	---	---	---	---
280	---	$Pt_{0.20}$	35	41	53	62	77	92	---	---	---	---	---
	FAN	$P_{tF.20}$	16	17	20	21	25	26	---	---	---	---	---
	CC	$P_{tC.20}$	35	36	40	40	38	39	---	---	---	---	---
315	---	$Pt_{0.20}$	33	40	51	56	75	88	---	---	---	---	---
	FAN	$P_{tF.20}$	15	17	20	19	25	25	---	---	---	---	---
	CC	$P_{tC.20}$	33	35	39	36	37	38	---	---	---	---	---
355	---	$Pt_{0.20}$	---	38	---	60	72	86	---	---	---	---	---
	FAN	$P_{tF.20}$	---	16	---	20	24	25	---	---	---	---	---
	CC	$P_{tC.20}$	---	34	---	39	36	37	---	---	---	---	---
400	---	$Pt_{0.20}$	---	---	---	---	---	83	---	---	---	---	---
	FAN	$P_{tF.20}$	---	---	---	---	---	24	---	---	---	---	---
	CC	$P_{tC.20}$	---	---	---	---	---	35	---	---	---	---	---
450	---	$Pt_{0.20}$	---	---	---	---	---	---	---	---	---	---	---
	FAN	$P_{tF.20}$	---	---	---	---	---	---	---	---	---	---	---
	CC	$P_{tC.20}$	---	---	---	---	---	---	---	---	---	---	---

Thermal Ratings
M1/M3 Mounting - 1500 rpm
@ 40ºC = 104ºF



Nom. Ratio	Cooling Type		SK 5207/ SK 5307	SK 6207/ SK 6307	SK 7207/ SK 7307	SK 8207/ SK 8307	SK 9207/ SK 9307	SK 10207/ SK 10307	SK 11207/ SK 11307	SK 12207/ SK 12307	SK 13207/ SK 13307	SK 14207/ SK 14307	SK 15207/ SK 15307
			Thermal Power										
i_N			P_N [kW]	P_N [kW]	P_N [kW]	P_N [kW]	P_N [kW]	P_N [kW]	P_N [kW]	P_N [kW]	P_N [kW]	P_N [kW]	P_N [kW]
5.6	---	$Pt_{0.40}$	---	---	---	---	---	---	*	*	*	---	*
	FAN	$P_{tF.40}$	---	---	---	---	---	---	*	*	*	---	*
	CC	$P_{tC.20}$	---	---	---	---	---	---	567	496	636	---	*
6,3	---	$Pt_{0.40}$	---	---	---	---	---	---	*	0	0	---	*
	FAN	$P_{tF.40}$	---	---	---	---	---	---	13	0	0	---	*
	CC	$P_{tC.20}$	---	---	---	---	---	---	553	493	652	---	*
7,1	---	$Pt_{0.40}$	106	---	116	---	79	---	*	*	*	*	*
	FAN	$P_{tF.40}$	75	---	99	---	156	---	176	*	*	*	*
	CC	$P_{tC.20}$	188	---	220	---	261	---	649	730	922	670	131
8	---	$Pt_{0.40}$	102	134	116	137	86	147	*	*	*	*	*
	FAN	$P_{tF.40}$	70	80	94	88	143	150	181	*	*	*	*
	CC	$P_{tC.20}$	178	193	210	190	240	248	623	694	901	689	213
9	---	$Pt_{0.40}$	113	127	140	154	153	148	105	*	*	*	*
	FAN	$P_{tF.40}$	67	74	88	97	130	139	167	170	151	*	*
	CC	$P_{tC.20}$	171	179	197	209	223	230	578	821	1.062	990	751
10	---	$Pt_{0.40}$	108	140	138	155	149	209	109	*	*0	*	*
	FAN	$P_{tF.40}$	63	72	84	79	121	130	155	172	167	*	*
	CC	$P_{tC.20}$	161	175	188	171	207	217	542	772	1.023	982	748
11,2	---	$Pt_{0.40}$	115	131	150	173	188	201	181	98	65	*	*
	FAN	$P_{tF.40}$	62	67	79	87	115	121	136	199	258	283	122
	CC	$P_{tC.20}$	157	162	177	188	197	202	493	748	1.044	1.155	1.067
12,5	---	$Pt_{0.40}$	109	139	146	161	179	238	176	101	79	*	*
	FAN	$P_{tF.40}$	58	66	75	71	107	115	127	183	239	291	147
	CC	$P_{tC.20}$	148	161	170	155	184	194	464	697	982	1.125	1.023
14	---	$Pt_{0.40}$	111	130	151	178	204	226	210	185	215	178	78
	FAN	$P_{tF.40}$	56	61	70	78	102	107	117	163	197	266	330
	CC	$P_{tC.20}$	144	149	159	170	177	180	432	646	875	1.022	1.098
16	---	$Pt_{0.40}$	106	133	146	158	194	250	201	177	212	184	94
	FAN	$P_{tF.40}$	53	61	68	64	96	103	111	151	186	254	305
	CC	$P_{tC.20}$	136	148	153	140	165	174	409	601	829	979	1.026
18	---	$Pt_{0.40}$	103	125	145	175	205	235	218	226	283	310	307
	FAN	$P_{tF.40}$	50	56	63	70	90	97	100	136	161	217	245
	CC	$P_{tC.20}$	128	137	142	153	156	162	373	550	737	874	893
20	---	$Pt_{0.40}$	98	123	140	151	193	245	208	214	273	305	298
	FAN	$P_{tF.40}$	47	54	60	57	85	91	95	127	153	209	230
	CC	$P_{tC.20}$	121	131	136	125	146	154	355	515	702	841	841
22,4	---	$Pt_{0.40}$	97	115	134	166	195	230	9	*	*	370	*
	FAN	$P_{tF.40}$	45	50	55	62	78	86	113	121	40	181	*
	CC	$P_{tC.20}$	116	122	124	136	136	144	364	496	608	743	287
25	---	$Pt_{0.40}$	92	114	130	139	184	230	30	*	*	361	*
	FAN	$P_{tF.40}$	43	49	53	50	74	80	100	136	82	175	*
	CC	$P_{tC.20}$	109	118	120	110	128	134	333	488	595	717	346
28	---	$Pt_{0.40}$	65	107	81	152	127	217	30	*0	*	*	*
	FAN	$P_{tF.40}$	37	45	44	55	66	75	95	130	81	138	*
	CC	$P_{tC.20}$	93	111	100	120	115	126	318	462	573	656	334
31,5	---	$Pt_{0.40}$	63	78	78	89	121	155	106	120	108	*	*
	FAN	$P_{tF.40}$	35	39	43	41	63	67	79	105	129	165	85
	CC	$P_{tC.20}$	89	95	97	90	109	112	286	417	565	632	612
35,5	---	$Pt_{0.40}$	61	74	76	96	118	148	101	114	105	*	*
	FAN	$P_{tF.40}$	34	37	40	44	59	63	75	99	123	162	85
	CC	$P_{tC.20}$	86	90	91	96	102	107	274	393	542	616	586
40	---	$Pt_{0.40}$	58	72	73	83	112	143	101	117	112	168	*
	FAN	$P_{tF.40}$	32	36	39	38	56	60	70	93	114	137	114
	CC	$P_{tC.20}$	82	87	88	82	97	100	256	372	502	541	581
45	---	$Pt_{0.40}$	56	68	73	89	111	136	97	111	108	165	*0
	FAN	$P_{tF.40}$	31	34	38	40	54	57	67	88	109	133	110
	CC	$P_{tC.20}$	78	82	87	88	94	95	245	352	483	526	557

*** Additional Cooling Necessary - Consult Factory**

Nom. Ratio	Cooling Type		SK 5207/ SK 5307	SK 6207/ SK 6307	SK 7207/ SK 7307	SK 8207/ SK 8307	SK 9207/ SK 9307	SK 10207/ SK 10307	SK 11207/ SK 11307	SK 12207/ SK 12307	SK 13207/ SK 13307	SK 14207/ SK 14307	SK 15207/ SK 15307
			Thermal Power										
i_N			P_N [kW]	P_N [kW]	P_N [kW]	P_N [kW]	P_N [kW]	P_N [kW]	P_N [kW]	P_N [kW]	P_N [kW]	P_N [kW]	P_N [kW]
50	---	$Pt_{0.40}$	54	67	71	80	106	134	125	154	183	164	204
	FAN	$P_{tF.40}$	29	33	37	36	52	55	60	79	95	121	141
	CC	$P_{tC.20}$	75	80	84	79	89	92	224	325	441	481	519
56	---	$Pt_{0.40}$	60	63	80	86	127	128	120	146	176	161	196
	FAN	$P_{tF.40}$	29	31	35	38	51	52	58	75	92	118	135
	CC	$P_{tC.20}$	75	76	80	84	89	87	215	308	424	468	496
63	---	$Pt_{0.40}$	57	70	78	85	121	149	116	142	170	229	197
	FAN	$P_{tF.40}$	28	31	34	33	49	52	54	71	86	104	128
	CC	$P_{tC.20}$	72	76	78	72	84	87	203	293	395	424	472
71	---	$Pt_{0.40}$	55	66	74	91	115	142	111	135	164	223	189
	FAN	$P_{tF.40}$	27	30	32	35	46	49	52	68	82	101	123
	CC	$P_{tC.20}$	69	72	73	78	79	83	195	278	381	413	452
80	---	$Pt_{0.40}$	53	64	71	78	109	134	117	148	186	210	257
	FAN	$P_{tF.40}$	26	29	31	30	43	46	46	60	72	93	103
	CC	$P_{tC.20}$	66	70	71	66	75	78	174	251	339	380	390
90	---	$Pt_{0.40}$	51	61	71	84	106	128	113	141	180	205	247
	FAN	$P_{tF.40}$	25	27	31	32	42	44	45	57	70	91	99
	CC	$P_{tC.20}$	63	66	71	71	73	74	168	239	328	370	374
100	---	$Pt_{0.40}$	48	59	69	75	101	124	108	136	171	221	240
	FAN	$P_{tF.40}$	24	26	30	29	40	42	42	55	66	79	95
	CC	$P_{tC.20}$	60	64	68	63	69	71	158	229	308	327	359
112	---	$Pt_{0.40}$	48	56	65	81	101	118	104	129	165	216	231
	FAN	$P_{tF.40}$	22	25	27	31	38	40	41	52	63	77	91
	CC	$P_{tC.20}$	57	61	61	68	66	68	153	218	298	319	345
125	---	$Pt_{0.40}$	46	55	63	69	99	118	---	---	---	203	---
	FAN	$P_{tF.40}$	21	24	26	25	37	38	---	---	---	72	---
	CC	$P_{tC.20}$	55	58	59	55	64	65	---	---	---	296	---
140	---	$Pt_{0.40}$	44	52	63	73	94	114	---	---	---	198	---
	FAN	$P_{tF.40}$	21	23	26	27	35	37	---	---	---	70	---
	CC	$P_{tC.20}$	53	55	59	59	61	63	---	---	---	289	---
160	---	$Pt_{0.40}$	42	51	61	66	92	109	---	---	---	---	---
	FAN	$P_{tF.40}$	20	22	25	24	33	35	---	---	---	---	---
	CC	$P_{tC.20}$	51	54	57	53	58	60	---	---	---	---	---
180	---	$Pt_{0.40}$	33	48	49	71	87	106	---	---	---	---	---
	FAN	$P_{tF.40}$	16	21	20	26	32	34	---	---	---	---	---
	CC	$P_{tC.20}$	40	51	45	57	55	57	---	---	---	---	---
200	---	$Pt_{0.40}$	32	38	48	53	74	101	---	---	---	---	---
	FAN	$P_{tF.40}$	15	17	19	19	26	32	---	---	---	---	---
	CC	$P_{tC.20}$	39	41	44	41	45	54	---	---	---	---	---
224	---	$Pt_{0.40}$	31	36	46	56	71	84	---	---	---	---	---
	FAN	$P_{tF.40}$	15	16	18	20	25	26	---	---	---	---	---
	CC	$P_{tC.20}$	38	39	42	44	43	44	---	---	---	---	---
250	---	$Pt_{0.40}$	30	36	45	49	68	81	---	---	---	---	---
	FAN	$P_{tF.40}$	14	16	18	17	24	25	---	---	---	---	---
	CC	$P_{tC.20}$	36	38	41	38	41	42	---	---	---	---	---
280	---	$Pt_{0.40}$	29	34	45	52	65	78	---	---	---	---	---
	FAN	$P_{tF.40}$	14	15	18	19	23	24	---	---	---	---	---
	CC	$P_{tC.20}$	35	36	41	41	39	40	---	---	---	---	---
315	---	$Pt_{0.40}$	28	34	43	47	64	75	---	---	---	---	---
	FAN	$P_{tF.40}$	13	15	17	17	22	23	---	---	---	---	---
	CC	$P_{tC.20}$	34	36	40	37	39	39	---	---	---	---	---
355	---	$Pt_{0.40}$	---	32	---	50	61	73	---	---	---	---	---
	FAN	$P_{tF.40}$	---	14	---	18	21	22	---	---	---	---	---
	CC	$P_{tC.20}$	---	34	---	40	37	38	---	---	---	---	---
400	---	$Pt_{0.40}$	---	---	---	---	---	70	---	---	---	---	---
	FAN	$P_{tF.40}$	---	---	---	---	---	22	---	---	---	---	---
	CC	$P_{tC.20}$	---	---	---	---	---	36	---	---	---	---	---
450	---	$Pt_{0.40}$	---	---	---	---	---	---	---	---	---	---	---
	FAN	$P_{tF.40}$	---	---	---	---	---	---	---	---	---	---	---
	CC	$P_{tC.20}$	---	---	---	---	---	---	---	---	---	---	---

Thermal Ratings
M1/M3 Mounting - 1800 rpm
@ 20°C = 68°F



Nom. Ratio	Cooling Type		SK 5207/ SK 5307	SK 6207/ SK 6307	SK 7207/ SK 7307	SK 8207/ SK 8307	SK 9207/ SK 9307	SK 10207/ SK 10307	SK 11207/ SK 11307	SK 12207/ SK 12307	SK 13207/ SK 13307	SK 14207/ SK 14307	SK 15207/ SK 15307
			Thermal Power										
i_N			P_N [kW]	P_N [kW]	P_N [kW]	P_N [kW]	P_N [kW]	P_N [kW]	P_N [kW]	P_N [kW]	P_N [kW]	P_N [kW]	P_N [kW]
5,6	---	$Pt_{0.20}$	---	---	---	---	---	---	*	*	*	---	*
	FAN	$P_{tF.20}$	---	---	---	---	---	---	*	*	*	---	*
	CC	$P_{tC.20}$	---	---	---	---	---	---	427	45	36	---	*
6,3	---	$Pt_{0.20}$	---	---	---	---	---	---	*	*	*	---	*
	FAN	$P_{tF.20}$	---	---	---	---	---	---	*	*	*	---	*
	CC	$P_{tC.20}$	---	---	---	---	---	---	434	117	145	---	*
7,1	---	$Pt_{0.20}$	116	---	110	---	6	---	*	*	*	*	*
	FAN	$P_{tF.20}$	92	---	123	---	212	---	70	*	*	*	*
	CC	$P_{tC.20}$	198	---	235	---	302	---	590	548	656	18	*
8	---	$Pt_{0.20}$	112	152	113	142	26	106	*	*	*	*	*
	FAN	$P_{tF.20}$	86	97	117	108	192	190	93	*	*	*	*
	CC	$P_{tC.20}$	186	201	224	202	276	274	573	536	666	115	*
9	---	$Pt_{0.20}$	130	144	152	161	139	116	24	*	*	*	*
	FAN	$P_{tF.20}$	82	90	107	118	161	173	226	7	*	*	*
	CC	$P_{tC.20}$	178	187	207	221	239	251	650	743	952	713	190
10	---	$Pt_{0.20}$	125	163	150	173	140	212	40	*	*	*	*
	FAN	$P_{tF.20}$	77	87	102	95	149	157	208	35	*	*	*
	CC	$P_{tC.20}$	168	182	198	180	222	230	606	705	926	729	260
11,2	---	$Pt_{0.20}$	135	153	171	193	200	207	168	*	*	*	*
	FAN	$P_{tF.20}$	75	81	95	104	139	146	167	261	241	73	*
	CC	$P_{tC.20}$	163	169	185	197	208	214	528	833	1.076	1.048	844
12,5	---	$Pt_{0.20}$	128	165	167	186	192	264	167	1	*	*	*
	FAN	$P_{tF.20}$	71	80	91	85	130	138	156	254	248	105	*
	CC	$P_{tC.20}$	154	167	178	162	194	203	497	788	1.035	1.029	825
14	---	$Pt_{0.20}$	132	154	176	206	231	252	222	156	161	25	*
	FAN	$P_{tF.20}$	68	74	85	93	123	128	141	202	246	364	281
	CC	$P_{tC.20}$	149	155	166	177	185	189	458	697	949	1.153	1.097
16	---	$Pt_{0.20}$	126	159	171	187	219	288	214	152	166	47	*
	FAN	$P_{tF.20}$	65	73	82	77	115	123	134	187	231	343	288
	CC	$P_{tC.20}$	141	153	159	145	173	181	433	647	898	1.100	1.051
18	---	$Pt_{0.20}$	124	149	171	206	239	272	245	235	290	283	248
	FAN	$P_{tF.20}$	61	68	75	84	108	115	120	164	194	264	301
	CC	$P_{tC.20}$	133	142	147	159	162	169	392	584	783	937	965
20	---	$Pt_{0.20}$	118	148	166	180	226	289	234	223	282	282	247
	FAN	$P_{tF.20}$	57	65	73	68	101	108	114	153	184	254	282
	CC	$P_{tC.20}$	126	136	142	130	152	160	373	546	746	901	908
22,4	---	$Pt_{0.20}$	116	138	161	198	231	272	*	*	*	398	*
	FAN	$P_{tF.20}$	55	61	66	74	94	101	87	46	*	215	*
	CC	$P_{tC.20}$	120	127	129	141	141	150	351	458	523	785	*
25	---	$Pt_{0.20}$	111	137	156	168	219	275	*	*	*	389	*
	FAN	$P_{tF.20}$	52	58	64	60	88	94	106	82	*	207	*
	CC	$P_{tC.20}$	113	123	125	114	133	139	348	461	531	757	*
28	---	$Pt_{0.20}$	76	129	91	184	141	260	*	*	*	*	*
	FAN	$P_{tF.20}$	45	55	53	65	80	88	102	80	*	*	*
	CC	$P_{tC.20}$	97	114	104	124	120	131	335	436	512	582	*
31,5	---	$Pt_{0.20}$	73	91	89	103	134	177	98	100	51	*	*
	FAN	$P_{tF.20}$	43	47	52	49	76	80	96	130	169	59	*
	CC	$P_{tC.20}$	93	99	101	94	114	117	306	450	624	579	495
35,5	---	$Pt_{0.20}$	71	86	86	110	132	168	95	96	52	*	*
	FAN	$P_{tF.20}$	41	45	49	53	72	76	92	122	161	61	*
	CC	$P_{tC.20}$	89	93	95	100	107	111	293	424	598	565	476
40	---	$Pt_{0.20}$	68	85	84	96	126	164	98	103	71	135	*
	FAN	$P_{tF.20}$	39	43	47	45	68	71	86	115	145	169	*
	CC	$P_{tC.20}$	85	90	92	86	102	105	274	401	550	587	488
45	---	$Pt_{0.20}$	66	80	84	103	125	157	94	98	70	133	*
	FAN	$P_{tF.20}$	37	41	47	48	65	67	82	109	139	165	*
	CC	$P_{tC.20}$	82	86	91	92	98	99	262	379	528	570	468

*** Additional Cooling Necessary - Consult Factory**

Nom. Ratio	Cooling Type		SK 5207/ SK 5307	SK 6207/ SK 6307	SK 7207/ SK 7307	SK 8207/ SK 8307	SK 9207/ SK 9307	SK 10207/ SK 10307	SK 11207/ SK 11307	SK 12207/ SK 12307	SK 13207/ SK 13307	SK 14207/ SK 14307	SK 15207/ SK 15307
			Thermal Power										
i_N			P_N [kW]	P_N [kW]	P_N [kW]	P_N [kW]	P_N [kW]	P_N [kW]	P_N [kW]	P_N [kW]	P_N [kW]	P_N [kW]	P_N [kW]
50	---	$Pt_{0.20}$	63	78	81	93	119	154	140	167	192	142	181
	FAN	$P_{tF.20}$	36	40	45	43	62	65	72	95	114	149	172
	CC	$P_{tC.20}$	78	83	88	82	93	96	236	343	467	519	558
56	---	$Pt_{0.20}$	72	75	95	100	151	147	134	158	185	140	174
	FAN	$P_{tF.20}$	36	38	42	46	61	62	69	90	110	145	164
	CC	$P_{tC.20}$	78	79	83	88	92	91	227	325	449	505	533
63	---	$Pt_{0.20}$	69	84	92	102	143	178	130	156	180	250	181
	FAN	$P_{tF.20}$	34	38	41	39	58	61	65	85	102	123	155
	CC	$P_{tC.20}$	74	79	81	75	88	90	213	309	419	448	506
71	---	$Pt_{0.20}$	66	80	87	109	136	169	125	148	174	244	174
	FAN	$P_{tF.20}$	33	36	39	42	55	58	62	81	98	120	149
	CC	$P_{tC.20}$	71	75	76	80	82	86	205	294	403	436	484
80	---	$Pt_{0.20}$	63	77	85	94	130	161	137	171	213	232	289
	FAN	$P_{tF.20}$	31	35	37	36	52	55	55	71	85	110	121
	CC	$P_{tC.20}$	68	72	74	68	78	81	182	263	355	401	409
90	---	$Pt_{0.20}$	60	73	84	101	126	153	131	163	206	226	278
	FAN	$P_{tF.20}$	30	33	37	38	50	52	53	68	82	107	116
	CC	$P_{tC.20}$	65	69	73	73	75	77	175	250	343	391	392
100	---	$Pt_{0.20}$	58	71	82	90	120	149	126	158	197	258	271
	FAN	$P_{tF.20}$	29	32	36	34	48	50	50	65	77	92	112
	CC	$P_{tC.20}$	63	66	71	66	72	74	165	239	322	342	377
112	---	$Pt_{0.20}$	57	67	78	97	122	142	121	150	190	252	261
	FAN	$P_{tF.20}$	27	30	32	37	45	48	48	62	74	90	107
	CC	$P_{tC.20}$	59	63	63	71	68	70	159	228	312	334	362
125	---	$Pt_{0.20}$	55	67	76	83	118	142	---	---	---	237	---
	FAN	$P_{tF.20}$	26	29	31	30	44	45	---	---	---	84	---
	CC	$P_{tC.20}$	57	60	61	57	66	67	---	---	---	310	---
140	---	$Pt_{0.20}$	53	63	76	89	113	138	---	---	---	231	---
	FAN	$P_{tF.20}$	25	27	31	32	42	44	---	---	---	82	---
	CC	$P_{tC.20}$	55	57	61	61	63	65	---	---	---	303	---
160	---	$Pt_{0.20}$	51	62	73	80	110	132	---	---	---	---	---
	FAN	$P_{tF.20}$	24	26	30	29	40	42	---	---	---	---	---
	CC	$P_{tC.20}$	52	56	59	55	60	62	---	---	---	---	---
180	---	$Pt_{0.20}$	40	58	60	86	105	128	---	---	---	---	---
	FAN	$P_{tF.20}$	19	25	24	31	38	40	---	---	---	---	---
	CC	$P_{tC.20}$	41	53	47	59	57	59	---	---	---	---	---
200	---	$Pt_{0.20}$	38	46	58	64	89	122	---	---	---	---	---
	FAN	$P_{tF.20}$	18	20	23	22	30	38	---	---	---	---	---
	CC	$P_{tC.20}$	40	42	45	43	46	56	---	---	---	---	---
224	---	$Pt_{0.20}$	37	44	56	68	86	103	---	---	---	---	---
	FAN	$P_{tF.20}$	18	19	22	24	29	30	---	---	---	---	---
	CC	$P_{tC.20}$	39	40	43	45	44	45	---	---	---	---	---
250	---	$Pt_{0.20}$	36	43	54	60	82	99	---	---	---	---	---
	FAN	$P_{tF.20}$	17	19	21	21	28	29	---	---	---	---	---
	CC	$P_{tC.20}$	38	39	42	40	42	43	---	---	---	---	---
280	---	$Pt_{0.20}$	35	42	54	63	79	95	---	---	---	---	---
	FAN	$P_{tF.20}$	17	18	21	22	27	28	---	---	---	---	---
	CC	$P_{tC.20}$	36	38	42	42	41	41	---	---	---	---	---
315	---	$Pt_{0.20}$	34	41	53	58	77	91	---	---	---	---	---
	FAN	$P_{tF.20}$	16	17	21	20	26	27	---	---	---	---	---
	CC	$P_{tC.20}$	35	37	41	38	40	40	---	---	---	---	---
355	---	$Pt_{0.20}$	---	39	---	61	75	89	---	---	---	---	---
	FAN	$P_{tF.20}$	---	17	---	21	25	26	---	---	---	---	---
	CC	$P_{tC.20}$	---	35	---	41	38	39	---	---	---	---	---
400	---	$Pt_{0.20}$	---	---	---	---	---	86	---	---	---	---	---
	FAN	$P_{tF.20}$	---	---	---	---	---	25	---	---	---	---	---
	CC	$P_{tC.20}$	---	---	---	---	---	38	---	---	---	---	---
450	---	$Pt_{0.20}$	---	---	---	---	---	---	---	---	---	---	---
	FAN	$P_{tF.20}$	---	---	---	---	---	---	---	---	---	---	---
	CC	$P_{tC.20}$	---	---	---	---	---	---	---	---	---	---	---

Thermal Ratings
M1/M3 Mounting - 1800 rpm
@ 40ºC = 104ºF

Nom. Ratio	Cooling Type		SK 5207/ SK 5307	SK 6207/ SK 6307	SK 7207/ SK 7307	SK 8207/ SK 8307	SK 9207/ SK 9307	SK 10207/ SK 10307	SK 11207/ SK 11307	SK 12207/ SK 12307	SK 13207/ SK 13307	SK 14207/ SK 14307	SK 15207/ SK 15307
			Thermal Power										
i_N			P_N [kW]	P_N [kW]	P_N [kW]	P_N [kW]	P_N [kW]	P_N [kW]	P_N [kW]	P_N [kW]	P_N [kW]	P_N [kW]	P_N [kW]
5,6	---	$Pt_{0.40}$	---	---	---	---	---	---	*	*	*	---	*
	FAN	$P_{tF.40}$	---	---	---	---	---	---	*	*	*	---	*
	CC	$P_{tC.20}$	---	---	---	---	---	---	323	*	*	---	*
6,3	---	$Pt_{0.40}$	---	---	---	---	---	---	*	*	*	---	*
	FAN	$P_{tF.40}$	---	---	---	---	---	---	*	*	*	---	*
	CC	$P_{tC.20}$	---	---	---	---	---	---	337	*	*	---	*
7,1	---	$Pt_{0.40}$	82	---	51	---	*	---	*	*	*	*	*
	FAN	$P_{tF.40}$	82	---	119	---	109	---	*	*	*	*	*
	CC	$P_{tC.20}$	204	---	252	---	235	---	502	423	490	*	*
8	---	$Pt_{0.40}$	81	114	58	88	*	*	*	*	0	*	*
	FAN	$P_{tF.40}$	77	87	112	101	118	182	*	*	0	*	*
	CC	$P_{tC.20}$	192	208	239	213	234	296	491	422	512	*	*
9	---	$Pt_{0.40}$	101	110	105	102	53	2	*	*	0	*	*
	FAN	$P_{tF.40}$	72	80	97	110	159	184	119	*	0	*	*
	CC	$P_{tC.20}$	183	192	216	233	262	288	598	640	817	516	*
10	---	$Pt_{0.40}$	97	129	106	127	61	124	*	*	*	*	*
	FAN	$P_{tF.40}$	68	77	93	87	145	149	127	*	*	*	*
	CC	$P_{tC.20}$	172	187	206	187	242	246	574	610	799	541	*
11,2	---	$Pt_{0.40}$	108	122	130	143	133	126	63	*	*	*	*
	FAN	$P_{tF.40}$	66	72	86	95	128	138	170	100	*	*	*
	CC	$P_{tC.20}$	167	173	192	205	219	227	567	745	958	887	638
12,5	---	$Pt_{0.40}$	103	134	128	145	130	189	69	*	*	*	*
	FAN	$P_{tF.40}$	62	71	82	77	119	128	157	108	28	*	*
	CC	$P_{tC.20}$	158	171	184	167	204	213	532	707	924	875	633
14	---	$Pt_{0.40}$	108	126	140	162	173	182	142	17	*	*	*
	FAN	$P_{tF.40}$	60	66	76	85	112	119	134	217	244	155	*
	CC	$P_{tC.20}$	153	159	171	183	192	198	480	758	1.008	1.039	926
16	---	$Pt_{0.40}$	103	132	136	151	165	222	139	26	*	*	*
	FAN	$P_{tF.40}$	57	64	73	69	105	112	126	198	243	169	*
	CC	$P_{tC.20}$	144	157	164	150	180	189	453	701	967	1.013	891
18	---	$Pt_{0.40}$	103	124	140	167	188	211	178	139	164	93	8
	FAN	$P_{tF.40}$	53	60	67	76	97	105	112	157	188	274	331
	CC	$P_{tC.20}$	136	146	152	164	168	176	408	613	822	1.006	1.061
20	---	$Pt_{0.40}$	98	123	136	148	179	231	172	134	163	103	26
	FAN	$P_{tF.40}$	50	57	65	61	91	98	106	146	178	260	306
	CC	$P_{tC.20}$	128	139	146	134	158	166	387	572	782	963	994
22,4	---	$Pt_{0.40}$	97	116	133	163	188	219	*	*	*	260	*
	FAN	$P_{tF.40}$	48	53	59	67	84	92	*	*	*	205	*
	CC	$P_{tC.20}$	122	130	133	146	146	155	305	398	441	819	*
25	---	$Pt_{0.40}$	93	115	129	140	178	225	*	*	*	256	*
	FAN	$P_{tF.40}$	45	51	57	54	79	85	23	*	*	198	*
	CC	$P_{tC.20}$	116	125	128	118	137	144	305	404	455	790	*
28	---	$Pt_{0.40}$	60	108	68	153	103	213	*	*	*	*	*
	FAN	$P_{tF.40}$	39	48	48	59	73	80	24	*	*	*	*
	CC	$P_{tC.20}$	99	117	108	128	126	135	293	383	439	488	*
31,5	---	$Pt_{0.40}$	58	73	67	79	98	134	39	12	*	*	*
	FAN	$P_{tF.40}$	37	42	46	44	70	73	97	139	111	*	*
	CC	$P_{tC.20}$	95	101	104	97	119	123	327	488	609	493	380
35,5	---	$Pt_{0.40}$	56	69	66	85	99	128	38	13	*	*	*
	FAN	$P_{tF.40}$	36	39	43	47	65	69	92	130	108	*	*
	CC	$P_{tC.20}$	91	95	98	103	112	116	313	460	587	482	367
40	---	$Pt_{0.40}$	54	68	64	75	94	126	46	29	*	1	+
	FAN	$P_{tF.40}$	34	38	42	40	62	65	85	119	121	189	*
	CC	$P_{tC.20}$	87	93	95	88	106	109	291	430	562	646	386
45	---	$Pt_{0.40}$	53	65	64	80	94	121	45	28	*	4	*
	FAN	$P_{tF.40}$	33	36	41	43	60	62	81	112	117	183	*
	CC	$P_{tC.20}$	84	88	94	94	102	104	278	406	541	627	370

*** Additional Cooling Necessary - Consult Factory**

Nom. Ratio	Cooling Type		SK 5207/ SK 5307	SK 6207/ SK 6307	SK 7207/ SK 7307	SK 8207/ SK 8307	SK 9207/ SK 9307	SK 10207/ SK 10307	SK 11207/ SK 11307	SK 12207/ SK 12307	SK 13207/ SK 13307	SK 14207/ SK 14307	SK 15207/ SK 15307
			Thermal Power										
i_N			P_N [kW]	P_N [kW]	P_N [kW]	P_N [kW]	P_N [kW]	P_N [kW]	P_N [kW]	P_N [kW]	P_N [kW]	P_N [kW]	P_N [kW]
50	---	$Pt_{0.40}$	51	63	63	73	90	120	100	113	119	32	53
	FAN	$P_{tF.40}$	31	35	40	38	57	60	67	89	110	159	179
	CC	$P_{tC.20}$	80	85	91	84	97	100	245	357	488	564	602
56	---	$Pt_{0.40}$	59	60	77	78	122	114	96	107	116	32	53
	FAN	$P_{tF.40}$	31	33	37	41	55	57	64	84	105	154	171
	CC	$P_{tC.20}$	79	80	85	90	95	95	235	339	469	548	575
63	---	$Pt_{0.40}$	57	70	75	84	116	146	94	107	115	171	69
	FAN	$P_{tF.40}$	30	33	36	35	52	56	61	80	98	117	158
	CC	$P_{tC.20}$	76	81	83	77	90	94	221	322	437	467	542
71	---	$Pt_{0.40}$	54	66	71	90	111	139	90	102	111	168	67
	FAN	$P_{tF.40}$	28	31	34	38	49	53	58	76	94	114	151
	CC	$P_{tC.20}$	73	76	78	82	85	89	213	306	421	455	518
80	---	$Pt_{0.40}$	52	64	69	77	106	132	107	131	161	162	210
	FAN	$P_{tF.40}$	27	30	33	32	47	50	50	66	79	105	114
	CC	$P_{tC.20}$	70	74	75	70	81	83	188	272	367	418	425
90	---	$Pt_{0.40}$	50	61	69	83	103	126	103	125	156	158	202
	FAN	$P_{tF.40}$	26	29	33	34	45	47	48	63	77	102	110
	CC	$P_{tC.20}$	67	70	75	75	78	79	181	259	355	408	408
100	---	$Pt_{0.40}$	48	59	67	74	98	122	99	122	149	200	199
	FAN	$P_{tF.40}$	25	28	32	31	43	45	46	60	72	86	105
	CC	$P_{tC.20}$	64	68	72	67	74	77	171	247	333	354	391
112	---	$Pt_{0.40}$	48	56	65	80	101	116	95	116	144	196	191
	FAN	$P_{tF.40}$	24	26	28	33	41	43	44	57	70	84	101
	CC	$P_{tC.20}$	61	64	65	72	70	73	165	236	322	346	375
125	---	$Pt_{0.40}$	46	56	63	69	98	118	---	---	---	184	---
	FAN	$P_{tF.40}$	23	25	27	27	39	41	---	---	---	78	---
	CC	$P_{tC.20}$	58	62	62	58	68	69	---	---	---	321	---
140	---	$Pt_{0.40}$	44	53	63	74	94	115	---	---	---	180	---
	FAN	$P_{tF.40}$	22	24	27	28	37	40	---	---	---	76	---
	CC	$P_{tC.20}$	56	58	62	62	65	67	---	---	---	313	---
160	---	$Pt_{0.40}$	43	52	61	67	92	110	---	---	---	---	---
	FAN	$P_{tF.40}$	21	23	26	25	35	38	---	---	---	---	---
	CC	$P_{tC.20}$	53	57	60	56	61	64	---	---	---	---	---
180	---	$Pt_{0.40}$	33	49	50	72	88	107	---	---	---	---	---
	FAN	$P_{tF.40}$	16	22	21	27	34	36	---	---	---	---	---
	CC	$P_{tC.20}$	42	54	48	60	59	60	---	---	---	---	---
200	---	$Pt_{0.40}$	32	39	49	54	75	102	---	---	---	---	---
	FAN	$P_{tF.40}$	16	17	20	20	27	34	---	---	---	---	---
	CC	$P_{tC.20}$	41	43	46	44	47	58	---	---	---	---	---
224	---	$Pt_{0.40}$	31	37	47	57	72	87	---	---	---	---	---
	FAN	$P_{tF.40}$	15	17	19	21	26	28	---	---	---	---	---
	CC	$P_{tC.20}$	40	41	44	46	46	46	---	---	---	---	---
250	---	$Pt_{0.40}$	30	36	45	50	69	83	---	---	---	---	---
	FAN	$P_{tF.40}$	15	16	19	18	25	26	---	---	---	---	---
	CC	$P_{tC.20}$	38	40	43	40	44	45	---	---	---	---	---
280	---	$Pt_{0.40}$	29	35	45	53	67	80	---	---	---	---	---
	FAN	$P_{tF.40}$	14	16	19	20	24	25	---	---	---	---	---
	CC	$P_{tC.20}$	37	38	43	43	42	43	---	---	---	---	---
315	---	$Pt_{0.40}$	29	34	44	48	65	77	---	---	---	---	---
	FAN	$P_{tF.40}$	14	15	18	18	24	24	---	---	---	---	---
	CC	$P_{tC.20}$	36	38	42	39	41	41	---	---	---	---	---
355	---	$Pt_{0.40}$	---	33	---	51	63	75	---	---	---	---	---
	FAN	$P_{tF.40}$	---	15	---	19	23	24	---	---	---	---	---
	CC	$P_{tC.20}$	---	36	---	42	39	40	---	---	---	---	---
400	---	$Pt_{0.40}$	---	---	---	---	---	72	---	---	---	---	---
	FAN	$P_{tF.40}$	---	---	---	---	---	23	---	---	---	---	---
	CC	$P_{tC.20}$	---	---	---	---	---	39	---	---	---	---	---
450	---	$Pt_{0.40}$	---	---	---	---	---	---	---	---	---	---	---
	FAN	$P_{tF.40}$	---	---	---	---	---	---	---	---	---	---	---
	CC	$P_{tC.20}$	---	---	---	---	---	---	---	---	---	---	---

Thermal Ratings
M5 Mounting - 1000 rpm
@ 20ºC = 68ºF



Nom. Ratio	Cooling Type		SK 5207/ SK 5307	SK 6207/ SK 6307	SK 7207/ SK 7307	SK 8207/ SK 8307	SK 9207/ SK 9307	SK 10207/ SK 10307	SK 11207/ SK 11307	SK 12207/ SK 12307	SK 13207/ SK 13307	SK 14207/ SK 14307	SK 15207/ SK 15307
			Thermal Power										
i_N			P_N [kW]	P_N [kW]	P_N [kW]	P_N [kW]	P_N [kW]	P_N [kW]	P_N [kW]	P_N [kW]	P_N [kW]	P_N [kW]	P_N [kW]
5,6	---	$Pt_{0.20}$	---	---	---	---	---	---	*	*	*	---	*
	FAN	$P_{tF.20}$	---	---	---	---	---	---	*	*	*	---	*
	CC	$P_{tC.20}$	---	---	---	---	---	---	302	207	*	---	*
6,3	---	$Pt_{0.20}$	---	---	---	---	---	---	*	0	*	---	*
	FAN	$P_{tF.20}$	---	---	---	---	---	---	*	0	*	---	*
	CC	$P_{tC.20}$	---	---	---	---	---	---	317	250	94	---	*
7,1	---	$Pt_{0.20}$	104	---	117	---	62	---	*	*	*	*	*
	FAN	$P_{tF.20}$	80	---	109	---	178	---	65	*	*	*	*
	CC	$P_{tC.20}$	166	---	192	---	233	---	465	554	549	*	*
8	---	$Pt_{0.20}$	101	126	118	131	72	110	*	*	*	*	*
	FAN	$P_{tF.20}$	76	88	104	102	163	184	90	*	*	*	*
	CC	$P_{tC.20}$	156	171	183	167	213	224	455	539	564	35	*
9	---	$Pt_{0.20}$	113	120	143	148	145	117	*	*	*	*	*
	FAN	$P_{tF.20}$	72	82	97	112	148	168	224	181	35	*	*
	CC	$P_{tC.20}$	150	158	171	183	196	206	548	692	809	577	*
10	---	$Pt_{0.20}$	108	134	140	151	142	188	14	*	*	*	*
	FAN	$P_{tF.20}$	68	79	92	91	137	156	209	187	76	*	*
	CC	$P_{tC.20}$	141	154	164	149	181	192	513	656	790	600	38
11,2	---	$Pt_{0.20}$	115	127	153	169	184	183	131	89	*	*	*
	FAN	$P_{tF.20}$	66	73	86	100	130	145	167	233	286	172	*
	CC	$P_{tC.20}$	138	143	154	164	172	178	442	658	914	874	627
12,5	---	$Pt_{0.20}$	110	136	149	158	176	224	131	95	*	*	*
	FAN	$P_{tF.20}$	62	73	83	82	121	138	156	214	288	196	*
	CC	$P_{tC.20}$	130	142	148	135	160	170	416	610	879	862	624
14	---	$Pt_{0.20}$	112	127	153	176	203	214	180	186	157	32	*
	FAN	$P_{tF.20}$	61	67	78	90	116	128	141	191	250	369	268
	CC	$P_{tC.20}$	126	131	138	148	154	158	382	562	781	955	874
16	---	$Pt_{0.20}$	107	131	148	157	192	240	174	179	160	56	*
	FAN	$P_{tF.20}$	57	67	74	73	108	123	133	176	235	346	276
	CC	$P_{tC.20}$	119	130	133	121	144	152	361	522	739	906	841
18	---	$Pt_{0.20}$	105	123	147	173	204	226	201	232	255	241	168
	FAN	$P_{tF.20}$	54	62	69	81	102	115	119	158	200	277	327
	CC	$P_{tC.20}$	112	120	123	133	136	142	326	476	647	779	819
20	---	$Pt_{0.20}$	100	122	142	150	193	237	192	219	248	242	173
	FAN	$P_{tF.20}$	51	59	66	66	95	109	113	148	190	266	305
	CC	$P_{tC.20}$	106	115	118	108	127	134	310	445	616	747	769
22,4	---	$Pt_{0.20}$	98	114	136	164	195	224	122	122	96	334	*
	FAN	$P_{tF.20}$	48	55	60	72	88	102	103	137	183	227	102
	CC	$P_{tC.20}$	101	107	108	118	118	125	280	405	570	653	548
25	---	$Pt_{0.20}$	93	114	132	138	184	224	131	143	136	327	*
	FAN	$P_{tF.20}$	46	53	58	58	83	95	95	127	163	219	202
	CC	$P_{tC.20}$	96	104	104	96	111	117	259	379	519	629	600
28	---	$Pt_{0.20}$	74	107	96	151	149	211	126	136	132	163	*
	FAN	$P_{tF.20}$	39	50	48	63	73	89	91	120	156	198	198
	CC	$P_{tC.20}$	81	97	86	104	97	110	248	357	498	552	577
31,5	---	$Pt_{0.20}$	71	86	93	101	142	173	164	202	233	193	203
	FAN	$P_{tF.20}$	37	42	46	47	69	78	85	113	139	176	214
	CC	$P_{tC.20}$	77	82	83	78	92	96	236	343	459	496	544
35,5	---	$Pt_{0.20}$	69	81	90	108	138	164	158	191	224	190	197
	FAN	$P_{tF.20}$	35	40	44	50	65	73	82	106	134	171	204
	CC	$P_{tC.20}$	74	78	79	83	86	91	226	324	441	482	519
40	---	$Pt_{0.20}$	66	80	87	94	131	159	154	191	223	282	220
	FAN	$P_{tF.20}$	34	39	42	43	62	69	76	100	124	153	190
	CC	$P_{tC.20}$	71	76	76	71	82	85	211	306	408	442	488
45	---	$Pt_{0.20}$	64	75	87	101	130	152	148	180	215	276	212
	FAN	$P_{tF.20}$	33	37	42	46	59	66	73	95	119	149	181
	CC	$P_{tC.20}$	68	71	75	76	79	81	202	290	393	430	466

*** Additional Cooling Necessary - Consult Factory**

Nom. Ratio	Cooling Type		SK 5207/ SK 5307	SK 6207/ SK 6307	SK 7207/ SK 7307	SK 8207/ SK 8307	SK 9207/ SK 9307	SK 10207/ SK 10307	SK 11207/ SK 11307	SK 12207/ SK 12307	SK 13207/ SK 13307	SK 14207/ SK 14307	SK 15207/ SK 15307
			Thermal Power										
i_N			P_N [kW]	P_N [kW]	P_N [kW]	P_N [kW]	P_N [kW]	P_N [kW]	P_N [kW]	P_N [kW]	P_N [kW]	P_N [kW]	P_N [kW]
50	---	$Pt_{0.20}$	61	74	84	91	124	150	157	199	247	267	331
	FAN	$P_{tF.20}$	31	35	41	41	57	63	68	89	110	136	162
	CC	$P_{tC.20}$	65	69	73	68	75	78	189	273	369	392	428
56	---	$Pt_{0.20}$	65	70	88	98	138	142	151	188	238	261	317
	FAN	$P_{tF.20}$	31	34	39	44	57	60	65	84	106	132	155
	CC	$P_{tC.20}$	65	66	70	73	76	74	181	259	355	382	409
63	---	$Pt_{0.20}$	62	75	85	91	131	157	144	183	228	287	313
	FAN	$P_{tF.20}$	30	34	37	38	54	61	61	80	99	122	147
	CC	$P_{tC.20}$	62	67	67	63	72	75	170	246	330	355	390
71	---	$Pt_{0.20}$	60	71	81	98	124	149	138	173	219	280	299
	FAN	$P_{tF.20}$	29	32	35	41	51	58	59	76	95	118	141
	CC	$P_{tC.20}$	60	63	64	67	68	71	163	233	318	346	372
80	---	$Pt_{0.20}$	57	69	78	84	118	141	134	171	218	263	312
	FAN	$P_{tF.20}$	27	31	34	34	48	54	53	69	86	109	124
	CC	$P_{tC.20}$	57	61	61	57	64	67	148	213	288	318	330
90	---	$Pt_{0.20}$	55	65	78	90	115	134	128	163	210	257	299
	FAN	$P_{tF.20}$	26	29	34	37	47	51	51	66	83	106	119
	CC	$P_{tC.20}$	55	58	61	62	62	63	142	203	278	309	317
100	---	$Pt_{0.20}$	53	63	76	80	110	131	123	157	200	249	291
	FAN	$P_{tF.20}$	25	29	33	33	44	50	48	63	78	95	114
	CC	$P_{tC.20}$	53	56	59	55	59	61	134	194	261	278	304
112	---	$Pt_{0.20}$	51	60	70	87	107	124	118	150	193	243	279
	FAN	$P_{tF.20}$	24	27	30	36	42	47	46	60	75	92	110
	CC	$P_{tC.20}$	50	53	53	59	56	58	129	185	252	271	292
125	---	$Pt_{0.20}$	49	58	67	72	104	121	---	---	---	228	---
	FAN	$P_{tF.20}$	23	26	29	29	41	45	---	---	---	86	---
	CC	$P_{tC.20}$	48	51	51	48	55	56	---	---	---	251	---
140	---	$Pt_{0.20}$	47	55	67	77	99	118	---	---	---	222	---
	FAN	$P_{tF.20}$	22	25	29	31	39	44	---	---	---	84	---
	CC	$P_{tC.20}$	46	48	51	51	52	54	---	---	---	245	---
160	---	$Pt_{0.20}$	45	54	65	69	96	112	---	---	---	---	---
	FAN	$P_{tF.20}$	21	24	28	28	37	42	---	---	---	---	---
	CC	$P_{tC.20}$	44	47	49	46	49	51	---	---	---	---	---
180	---	$Pt_{0.20}$	36	51	52	74	91	108	---	---	---	---	---
	FAN	$P_{tF.20}$	17	23	22	30	35	40	---	---	---	---	---
	CC	$P_{tC.20}$	35	44	40	50	47	49	---	---	---	---	---
200	---	$Pt_{0.20}$	35	41	51	54	76	103	---	---	---	---	---
	FAN	$P_{tF.20}$	16	18	21	22	29	38	---	---	---	---	---
	CC	$P_{tC.20}$	34	36	39	36	38	46	---	---	---	---	---
224	---	$Pt_{0.20}$	34	39	49	58	73	85	---	---	---	---	---
	FAN	$P_{tF.20}$	16	17	20	23	28	31	---	---	---	---	---
	CC	$P_{tC.20}$	33	34	37	39	37	38	---	---	---	---	---
250	---	$Pt_{0.20}$	33	39	47	51	70	82	---	---	---	---	---
	FAN	$P_{tF.20}$	15	17	20	20	26	29	---	---	---	---	---
	CC	$P_{tC.20}$	32	34	36	34	35	36	---	---	---	---	---
280	---	$Pt_{0.20}$	32	37	47	54	67	78	---	---	---	---	---
	FAN	$P_{tF.20}$	15	16	20	22	25	28	---	---	---	---	---
	CC	$P_{tC.20}$	31	32	36	36	34	35	---	---	---	---	---
315	---	$Pt_{0.20}$	31	36	46	49	66	75	---	---	---	---	---
	FAN	$P_{tF.20}$	14	16	19	20	25	27	---	---	---	---	---
	CC	$P_{tC.20}$	30	32	35	33	33	33	---	---	---	---	---
355	---	$Pt_{0.20}$	---	35	---	52	63	74	---	---	---	---	---
	FAN	$P_{tF.20}$	---	15	---	21	24	27	---	---	---	---	---
	CC	$P_{tC.20}$	---	30	---	35	32	33	---	---	---	---	---
400	---	$Pt_{0.20}$	---	---	---	---	---	71	---	---	---	---	---
	FAN	$P_{tF.20}$	---	---	---	---	---	25	---	---	---	---	---
	CC	$P_{tC.20}$	---	---	---	---	---	31	---	---	---	---	---
450	---	$Pt_{0.20}$	---	---	---	---	---	---	---	---	---	---	---
	FAN	$P_{tF.20}$	---	---	---	---	---	---	---	---	---	---	---
	CC	$P_{tC.20}$	---	---	---	---	---	---	---	---	---	---	---

Thermal Ratings
M5 Mounting - 1000 rpm
@ 40°C = 104°F

Nom. Ratio	Cooling Type		SK 5207/ SK 5307	SK 6207/ SK 6307	SK 7207/ SK 7307	SK 8207/ SK 8307	SK 9207/ SK 9307	SK 10207/ SK 10307	SK 11207/ SK 11307	SK 12207/ SK 12307	SK 13207/ SK 13307	SK 14207/ SK 14307	SK 15207/ SK 15307
			Thermal Power										
i_N			P_N [kW]	P_N [kW]	P_N [kW]	P_N [kW]	P_N [kW]	P_N [kW]	P_N [kW]	P_N [kW]	P_N [kW]	P_N [kW]	P_N [kW]
5,6	---	$Pt_{0.40}$	---	---	---	---	---	---	*	*	*	---	*
	FAN	$P_{tF.40}$	---	---	---	---	---	---	*	*	*	---	*
	CC	$P_{tC.20}$	---	---	---	---	---	---	222	70	*	---	*0
6,3	---	$Pt_{0.40}$	---	---	---	---	---	---	*	*	*	---	*
	FAN	$P_{tF.40}$	---	---	---	---	---	---	*	*	*	---	*
	CC	$P_{tC.20}$	---	---	---	---	---	---	244	140	*	---	*
7,1	---	$Pt_{0.40}$	78	---	76	---	*	---	*	*	*	*	*
	FAN	$P_{tF.40}$	71	---	98	---	156	---	*	*	*	*	*
	CC	$P_{tC.20}$	171	---	201	---	241	---	400	468	430	*	*
8	---	$Pt_{0.40}$	76	96	79	92	0	22	*	*	0	*	*
	FAN	$P_{tF.40}$	66	78	93	91	158	181	*	*	0	*	*
	CC	$P_{tC.20}$	161	176	191	174	236	251	395	460	454	*	*
9	---	$Pt_{0.40}$	90	92	108	105	86	41	*	*	*	*	*
	FAN	$P_{tF.40}$	63	72	86	100	134	161	119	10	*	*	*
	CC	$P_{tC.20}$	154	163	177	191	207	226	492	619	713	436	*
10	---	$Pt_{0.40}$	86	108	107	117	89	124	*	*	*	*	*
	FAN	$P_{tF.40}$	59	69	82	80	124	141	126	38	*	*	*
	CC	$P_{tC.20}$	145	158	169	155	191	202	474	589	700	466	*
11,2	---	$Pt_{0.40}$	94	102	122	132	135	124	56	*	*	*	*
	FAN	$P_{tF.40}$	58	64	76	88	115	130	159	208	120	*	*
	CC	$P_{tC.20}$	141	146	159	170	179	187	469	684	830	760	475
12,5	---	$Pt_{0.40}$	90	112	119	128	130	170	61	*	*	*	*
	FAN	$P_{tF.40}$	54	63	73	72	107	122	147	204	135	0	*
	CC	$P_{tC.20}$	133	145	152	139	167	177	439	647	800	753	483
14	---	$Pt_{0.40}$	93	105	126	142	159	163	121	103	28	*	*
	FAN	$P_{tF.40}$	53	59	68	79	102	114	128	177	251	223	7
	CC	$P_{tC.20}$	129	134	142	152	159	164	398	589	838	887	750
16	---	$Pt_{0.40}$	88	109	122	130	152	192	119	103	42	*	*
	FAN	$P_{tF.40}$	50	58	65	64	95	109	121	163	232	232	43
	CC	$P_{tC.20}$	122	133	136	125	149	157	375	546	788	867	726
18	---	$Pt_{0.40}$	88	102	123	143	166	182	152	166	168	114	*
	FAN	$P_{tF.40}$	47	54	60	70	89	101	107	143	182	261	323
	CC	$P_{tC.20}$	115	123	126	137	140	147	338	493	673	820	884
20	---	$Pt_{0.40}$	83	102	119	125	157	195	146	158	165	122	6
	FAN	$P_{tF.40}$	44	51	58	57	84	95	101	133	173	248	311
	CC	$P_{tC.20}$	108	118	121	111	131	138	320	461	640	785	838
22,4	---	$Pt_{0.40}$	83	96	115	138	162	184	79	62	*	237	*
	FAN	$P_{tF.40}$	42	48	53	63	77	89	94	128	185	205	*
	CC	$P_{tC.20}$	104	110	111	122	121	129	291	425	614	676	460
25	---	$Pt_{0.40}$	79	96	111	117	153	188	92	89	59	234	*
	FAN	$P_{tF.40}$	40	46	51	50	73	83	86	117	155	197	36
	CC	$P_{tC.20}$	98	106	107	98	114	120	269	395	547	651	519
28	---	$Pt_{0.40}$	62	90	79	128	122	177	89	85	60	70	*
	FAN	$P_{tF.40}$	34	43	42	55	64	78	82	110	148	189	42
	CC	$P_{tC.20}$	82	99	88	107	100	113	257	372	524	584	500
31,5	---	$Pt_{0.40}$	59	72	77	84	116	143	130	156	173	114	102
	FAN	$P_{tF.40}$	32	36	40	41	60	68	76	100	125	163	202
	CC	$P_{tC.20}$	79	84	85	80	95	99	243	354	474	520	576
35,5	---	$Pt_{0.40}$	58	68	74	90	114	136	125	148	168	113	101
	FAN	$P_{tF.40}$	31	34	38	44	57	64	72	95	120	158	192
	CC	$P_{tC.20}$	76	79	80	85	89	93	232	334	455	505	549
40	---	$Pt_{0.40}$	55	67	72	78	109	133	124	150	171	218	133
	FAN	$P_{tF.40}$	29	34	37	37	54	61	68	89	110	137	176
	CC	$P_{tC.20}$	72	77	78	73	85	88	217	315	421	456	512
45	---	$Pt_{0.40}$	53	63	73	84	108	126	119	142	165	213	129
	FAN	$P_{tF.40}$	28	32	36	40	52	57	65	84	106	133	167
	CC	$P_{tC.20}$	69	73	77	78	82	83	208	298	405	444	489

*** Additional Cooling Necessary - Consult Factory**

Nom. Ratio	Cooling Type		SK 5207/ SK 5307	SK 6207/ SK 6307	SK 7207/ SK 7307	SK 8207/ SK 8307	SK 9207/ SK 9307	SK 10207/ SK 10307	SK 11207/ SK 11307	SK 12207/ SK 12307	SK 13207/ SK 13307	SK 14207/ SK 14307	SK 15207/ SK 15307
			Thermal Power										
i_N			P_N [kW]	P_N [kW]	P_N [kW]	P_N [kW]	P_N [kW]	P_N [kW]	P_N [kW]	P_N [kW]	P_N [kW]	P_N [kW]	P_N [kW]
50	---	$Pt_{0.40}$	51	62	70	76	103	125	130	163	201	210	261
	FAN	$P_{tF.40}$	27	31	35	35	49	55	60	78	97	121	144
	CC	$P_{tC.20}$	66	71	74	69	78	80	194	280	378	405	441
56	---	$Pt_{0.40}$	55	59	75	82	117	119	125	155	194	205	250
	FAN	$P_{tF.40}$	27	29	34	38	50	53	57	74	94	118	137
	CC	$P_{tC.20}$	66	67	71	75	78	76	186	265	364	394	421
63	---	$Pt_{0.40}$	53	64	72	77	111	134	120	151	187	237	249
	FAN	$P_{tF.40}$	26	29	32	33	47	53	54	71	87	108	131
	CC	$P_{tC.20}$	64	68	69	64	74	77	175	252	339	365	401
71	---	$Pt_{0.40}$	51	60	69	83	106	127	115	143	180	231	239
	FAN	$P_{tF.40}$	25	28	31	35	44	50	52	67	84	105	125
	CC	$P_{tC.20}$	61	64	65	69	69	73	168	239	327	355	383
80	---	$Pt_{0.40}$	49	58	67	71	101	120	113	144	182	218	259
	FAN	$P_{tF.40}$	24	27	30	30	42	47	46	61	75	96	109
	CC	$P_{tC.20}$	58	62	63	59	66	69	151	218	295	326	338
90	---	$Pt_{0.40}$	47	55	66	76	98	114	108	137	176	213	249
	FAN	$P_{tF.40}$	23	25	29	32	41	45	45	58	73	94	105
	CC	$P_{tC.20}$	56	59	63	63	64	65	146	208	285	318	325
100	---	$Pt_{0.40}$	45	54	64	68	93	112	104	133	168	210	242
	FAN	$P_{tF.40}$	22	25	28	29	39	43	42	55	68	83	101
	CC	$P_{tC.20}$	53	57	60	56	61	63	138	198	267	285	312
112	---	$Pt_{0.40}$	44	51	59	74	92	106	100	126	162	205	233
	FAN	$P_{tF.40}$	21	23	26	31	37	41	41	53	66	81	97
	CC	$P_{tC.20}$	51	54	54	60	58	60	133	189	258	278	299
125	---	$Pt_{0.40}$	42	50	58	61	90	104	---	---	---	192	---
	FAN	$P_{tF.40}$	20	22	25	25	36	39	---	---	---	76	---
	CC	$P_{tC.20}$	49	52	52	49	56	57	---	---	---	258	---
140	---	$Pt_{0.40}$	40	47	57	66	85	101	---	---	---	188	---
	FAN	$P_{tF.40}$	19	21	25	27	34	38	---	---	---	74	---
	CC	$P_{tC.20}$	47	49	52	52	53	55	---	---	---	252	---
160	---	$Pt_{0.40}$	39	46	56	59	82	96	---	---	---	---	---
	FAN	$P_{tF.40}$	18	21	24	24	32	36	---	---	---	---	---
	CC	$P_{tC.20}$	45	48	50	47	51	53	---	---	---	---	---
180	---	$Pt_{0.40}$	31	44	45	63	78	93	---	---	---	---	---
	FAN	$P_{tF.40}$	15	20	19	26	31	34	---	---	---	---	---
	CC	$P_{tC.20}$	36	45	40	51	48	50	---	---	---	---	---
200	---	$Pt_{0.40}$	30	35	44	47	65	88	---	---	---	---	---
	FAN	$P_{tF.40}$	14	16	18	19	25	33	---	---	---	---	---
	CC	$P_{tC.20}$	35	37	39	37	39	48	---	---	---	---	---
224	---	$Pt_{0.40}$	29	34	42	49	63	73	---	---	---	---	---
	FAN	$P_{tF.40}$	14	15	18	20	24	27	---	---	---	---	---
	CC	$P_{tC.20}$	34	35	38	39	38	39	---	---	---	---	---
250	---	$Pt_{0.40}$	28	33	41	43	60	70	---	---	---	---	---
	FAN	$P_{tF.40}$	13	15	17	17	23	26	---	---	---	---	---
	CC	$P_{tC.20}$	33	34	36	34	36	37	---	---	---	---	---
280	---	$Pt_{0.40}$	27	32	40	46	58	68	---	---	---	---	---
	FAN	$P_{tF.40}$	13	14	17	19	22	25	---	---	---	---	---
	CC	$P_{tC.20}$	32	33	36	36	35	36	---	---	---	---	---
315	---	$Pt_{0.40}$	26	31	39	42	57	65	---	---	---	---	---
	FAN	$P_{tF.40}$	12	14	17	17	22	24	---	---	---	---	---
	CC	$P_{tC.20}$	30	32	35	33	34	34	---	---	---	---	---
355	---	$Pt_{0.40}$	---	30	---	45	54	64	---	---	---	---	---
	FAN	$P_{tF.40}$	---	13	---	18	21	23	---	---	---	---	---
	CC	$P_{tC.20}$	---	31	---	35	33	34	---	---	---	---	---
400	---	$Pt_{0.40}$	---	---	---	---	---	61	---	---	---	---	---
	FAN	$P_{tF.40}$	---	---	---	---	---	22	---	---	---	---	---
	CC	$P_{tC.20}$	---	---	---	---	---	32	---	---	---	---	---
450	---	$Pt_{0.40}$	---	---	---	---	---	---	---	---	---	---	---
	FAN	$P_{tF.40}$	---	---	---	---	---	---	---	---	---	---	---
	CC	$P_{tC.20}$	---	---	---	---	---	---	---	---	---	---	---

Thermal Ratings
M5 Mounting - 1200 rpm
@ 20°C = 68°F



Nom. Ratio	Cooling Type		SK 5207/ SK 5307	SK 6207/ SK 6307	SK 7207/ SK 7307	SK 8207/ SK 8307	SK 9207/ SK 9307	SK 10207/ SK 10307	SK 11207/ SK 11307	SK 12207/ SK 12307	SK 13207/ SK 13307	SK 14207/ SK 14307	SK 15207/ SK 15307
			Thermal Power										
i_N			P_N [kW]	P_N [kW]	P_N [kW]	P_N [kW]	P_N [kW]	P_N [kW]	P_N [kW]	P_N [kW]	P_N [kW]	P_N [kW]	P_N [kW]
5,6	---	$Pt_{0.20}$	---	---	---	---	---	---	*	*	*	---	*
	FAN	$P_{tF.20}$	---	---	---	---	---	---	*	*	*	---	*
	CC	$P_{tC.20}$	---	---	---	---	---	---	*	*	*	---	*
6,3	---	$Pt_{0.20}$	---	---	---	---	---	---	*	*	*	---	*
	FAN	$P_{tF.20}$	---	---	---	---	---	---	*	*	*	---	*
	CC	$P_{tC.20}$	---	---	---	---	---	---	*	*	*	---	*
7,1	---	$Pt_{0.20}$	77	---	52	---	*	---	*	*	*	*	*
	FAN	$P_{tF.20}$	89	---	128	---	105	---	*	*	*	*	*
	CC	$P_{tC.20}$	181	---	220	---	172	---	231	161	*	*	*
8	---	$Pt_{0.20}$	76	97	60	77	*	*	*	*	*	*	*
	FAN	$P_{tF.20}$	83	97	121	116	118	162	*	*	*	*	*
	CC	$P_{tC.20}$	170	186	208	188	179	210	249	201	*	*	*
9	---	$Pt_{0.20}$	98	95	107	92	37	*	*	*	*	*	*
	FAN	$P_{tF.20}$	78	89	107	127	181	172	*	*	*	*	*
	CC	$P_{tC.20}$	161	172	188	206	235	216	418	480	466	*	*
10	---	$Pt_{0.20}$	95	119	108	122	49	89	*	*	*	*	*
	FAN	$P_{tF.20}$	73	86	102	100	164	183	28	*	*	*	*
	CC	$P_{tC.20}$	152	166	180	164	214	222	410	469	481	*	*
11,2	---	$Pt_{0.20}$	107	113	133	138	127	97	*	*	*	*	*
	FAN	$P_{tF.20}$	71	79	94	110	146	167	192	135	*	*	*
	CC	$P_{tC.20}$	147	153	167	179	192	204	505	634	712	497	*
12,5	---	$Pt_{0.20}$	102	128	131	143	125	170	*	*	*	*	*
	FAN	$P_{tF.20}$	67	78	90	89	135	153	191	144	*	*	*
	CC	$P_{tC.20}$	139	151	160	146	179	188	486	605	697	516	*
14	---	$Pt_{0.20}$	108	120	143	159	171	166	95	24	*	*	*
	FAN	$P_{tF.20}$	65	72	84	97	126	142	165	247	220	35	*
	CC	$P_{tC.20}$	135	140	149	160	168	175	432	663	830	769	499
16	---	$Pt_{0.20}$	103	127	139	149	163	210	97	37	*	*	*
	FAN	$P_{tF.20}$	61	71	80	79	118	134	155	224	225	71	*
	CC	$P_{tC.20}$	127	138	143	130	157	165	407	610	800	760	503
18	---	$Pt_{0.20}$	103	120	143	165	188	200	154	152	123	*	*
	FAN	$P_{tF.20}$	57	66	74	87	110	125	134	181	237	337	219
	CC	$P_{tC.20}$	119	128	131	143	146	154	360	530	732	904	795
20	---	$Pt_{0.20}$	98	121	139	147	178	223	150	147	126	*	*
	FAN	$P_{tF.20}$	54	63	71	70	103	117	126	169	223	339	227
	CC	$P_{tC.20}$	113	122	126	116	137	144	341	494	694	882	767
22,4	---	$Pt_{0.20}$	98	114	136	162	188	211	54	*	*	210	+
	FAN	$P_{tF.20}$	51	58	64	77	95	110	123	178	133	260	*
	CC	$P_{tC.20}$	108	114	115	127	126	135	318	479	580	727	240
25	---	$Pt_{0.20}$	94	115	132	140	178	220	79	51	*	211	*
	FAN	$P_{tF.20}$	49	56	62	62	89	101	110	155	189	250	*
	CC	$P_{tC.20}$	102	110	111	102	119	125	290	434	591	700	365
28	---	$Pt_{0.20}$	72	108	91	153	138	208	77	51	*	*	*
	FAN	$P_{tF.20}$	41	53	51	67	79	95	105	145	185	226	*
	CC	$P_{tC.20}$	86	103	92	111	105	117	277	409	570	630	355
31,5	---	$Pt_{0.20}$	69	84	89	98	132	164	142	163	170	47	*
	FAN	$P_{tF.20}$	39	45	50	50	75	84	94	125	157	222	276
	CC	$P_{tC.20}$	82	87	89	83	99	103	256	375	506	581	652
35,5	---	$Pt_{0.20}$	68	80	86	105	131	156	136	155	165	50	*
	FAN	$P_{tF.20}$	38	42	47	54	70	79	90	118	150	214	267
	CC	$P_{tC.20}$	79	83	84	89	93	97	245	354	485	564	626
40	---	$Pt_{0.20}$	65	79	84	92	125	154	137	161	176	226	65
	FAN	$P_{tF.20}$	36	41	45	46	66	74	83	111	138	171	236
	CC	$P_{tC.20}$	75	80	81	75	88	91	229	333	447	485	571
45	---	$Pt_{0.20}$	63	75	85	99	125	147	131	153	170	221	66
	FAN	$P_{tF.20}$	35	39	45	49	64	70	80	105	132	166	224
	CC	$P_{tC.20}$	72	76	80	81	85	87	219	315	430	471	544

*** Additional Cooling Necessary - Consult Factory**

Nom. Ratio	Cooling Type		SK 5207/ SK 5307	SK 6207/ SK 6307	SK 7207/ SK 7307	SK 8207/ SK 8307	SK 9207/ SK 9307	SK 10207/ SK 10307	SK 11207/ SK 11307	SK 12207/ SK 12307	SK 13207/ SK 13307	SK 14207/ SK 14307	SK 15207/ SK 15307
			Thermal Power										
i_N			P_N [kW]	P_N [kW]	P_N [kW]	P_N [kW]	P_N [kW]	P_N [kW]	P_N [kW]	P_N [kW]	P_N [kW]	P_N [kW]	P_N [kW]
50	---	$Pt_{0.20}$	60	73	82	90	119	146	151	187	228	224	281
	FAN	$P_{tF.20}$	33	38	43	44	61	68	73	96	120	150	178
	CC	$P_{tC.20}$	69	74	77	72	81	84	203	294	397	429	465
56	---	$Pt_{0.20}$	66	70	89	96	140	139	145	177	220	219	270
	FAN	$P_{tF.20}$	33	36	41	47	61	65	70	91	115	146	170
	CC	$P_{tC.20}$	69	70	74	77	81	80	194	278	382	417	444
63	---	$Pt_{0.20}$	64	76	87	93	133	160	140	174	213	271	273
	FAN	$P_{tF.20}$	32	36	40	40	57	65	66	86	107	132	161
	CC	$P_{tC.20}$	66	70	71	66	77	80	182	264	356	383	422
71	---	$Pt_{0.20}$	61	72	82	100	126	152	134	165	205	265	262
	FAN	$P_{tF.20}$	30	34	38	43	54	61	63	82	103	128	154
	CC	$P_{tC.20}$	63	66	67	71	72	76	175	251	343	373	404
80	---	$Pt_{0.20}$	58	70	80	85	120	144	134	170	214	251	301
	FAN	$P_{tF.20}$	29	33	36	37	51	58	57	74	92	118	133
	CC	$P_{tC.20}$	60	64	65	61	68	71	158	228	308	342	353
90	---	$Pt_{0.20}$	56	67	80	92	117	137	129	162	207	245	289
	FAN	$P_{tF.20}$	28	31	36	39	50	55	55	70	89	115	128
	CC	$P_{tC.20}$	58	61	65	65	66	67	152	217	298	333	339
100	---	$Pt_{0.20}$	54	65	77	82	112	134	123	157	197	248	282
	FAN	$P_{tF.20}$	27	30	35	35	47	53	52	67	83	102	123
	CC	$P_{tC.20}$	56	59	63	58	63	65	143	207	279	297	325
112	---	$Pt_{0.20}$	52	61	72	88	110	127	118	149	191	242	271
	FAN	$P_{tF.20}$	25	29	31	38	45	50	50	64	81	99	118
	CC	$P_{tC.20}$	53	56	56	63	60	62	138	197	270	290	312
125	---	$Pt_{0.20}$	50	60	70	74	108	125	---	---	---	227	---
	FAN	$P_{tF.20}$	24	27	30	31	43	48	---	---	---	92	---
	CC	$P_{tC.20}$	51	54	54	51	58	59	---	---	---	269	---
140	---	$Pt_{0.20}$	48	57	69	80	102	122	---	---	---	222	---
	FAN	$P_{tF.20}$	23	26	30	33	41	46	---	---	---	90	---
	CC	$P_{tC.20}$	49	51	54	54	55	57	---	---	---	262	---
160	---	$Pt_{0.20}$	46	56	67	71	99	116	---	---	---	---	---
	FAN	$P_{tF.20}$	22	25	29	29	39	44	---	---	---	---	---
	CC	$P_{tC.20}$	47	50	52	49	52	54	---	---	---	---	---
180	---	$Pt_{0.20}$	37	53	54	77	95	112	---	---	---	---	---
	FAN	$P_{tF.20}$	18	24	23	32	38	42	---	---	---	---	---
	CC	$P_{tC.20}$	37	47	42	52	50	52	---	---	---	---	---
200	---	$Pt_{0.20}$	36	43	53	57	79	107	---	---	---	---	---
	FAN	$P_{tF.20}$	17	19	23	23	30	40	---	---	---	---	---
	CC	$P_{tC.20}$	36	38	41	38	41	49	---	---	---	---	---
224	---	$Pt_{0.20}$	35	41	50	60	76	89	---	---	---	---	---
	FAN	$P_{tF.20}$	17	18	22	24	29	32	---	---	---	---	---
	CC	$P_{tC.20}$	35	36	39	41	39	40	---	---	---	---	---
250	---	$Pt_{0.20}$	34	40	49	53	73	85	---	---	---	---	---
	FAN	$P_{tF.20}$	16	18	21	21	28	31	---	---	---	---	---
	CC	$P_{tC.20}$	34	35	38	35	37	38	---	---	---	---	---
280	---	$Pt_{0.20}$	33	38	49	56	70	82	---	---	---	---	---
	FAN	$P_{tF.20}$	16	17	21	23	27	30	---	---	---	---	---
	CC	$P_{tC.20}$	33	34	38	38	36	37	---	---	---	---	---
315	---	$Pt_{0.20}$	32	38	48	51	69	79	---	---	---	---	---
	FAN	$P_{tF.20}$	15	17	20	21	26	29	---	---	---	---	---
	CC	$P_{tC.20}$	32	33	37	34	35	35	---	---	---	---	---
355	---	$Pt_{0.20}$	---	36	---	54	66	77	---	---	---	---	---
	FAN	$P_{tF.20}$	---	16	---	22	25	28	---	---	---	---	---
	CC	$P_{tC.20}$	---	32	---	37	34	35	---	---	---	---	---
400	---	$Pt_{0.20}$	---	---	---	---	---	74	---	---	---	---	---
	FAN	$P_{tF.20}$	---	---	---	---	---	27	---	---	---	---	---
	CC	$P_{tC.20}$	---	---	---	---	---	33	---	---	---	---	---
450	---	$Pt_{0.20}$	---	---	---	---	---	---	---	---	---	---	---
	FAN	$P_{tF.20}$	---	---	---	---	---	---	---	---	---	---	---
	CC	$P_{tC.20}$	---	---	---	---	---	---	---	---	---	---	---

Thermal Ratings
M5 Mounting - 1200 rpm
@ 40ºC = 104ºF



Nom. Ratio	Cooling Type		SK 5207/ SK 5307	SK 6207/ SK 6307	SK 7207/ SK 7307	SK 8207/ SK 8307	SK 9207/ SK 9307	SK 10207/ SK 10307	SK 11207/ SK 11307	SK 12207/ SK 12307	SK 13207/ SK 13307	SK 14207/ SK 14307	SK 15207/ SK 15307
			Thermal Power										
i_N			P_N [kW]	P_N [kW]	P_N [kW]	P_N [kW]	P_N [kW]	P_N [kW]	P_N [kW]	P_N [kW]	P_N [kW]	P_N [kW]	P_N [kW]
5,6	---	$Pt_{0.40}$	---	---	---	---	---	---	*	*	*	---	*
	FAN	$P_{tF.40}$	---	---	---	---	---	---	*	*	*	---	*
	CC	$P_{tC.20}$	---	---	---	---	---	---	*	*	*	---	*
6,3	---	$Pt_{0.40}$	---	---	---	---	---	---	*	*	*	---	*
	FAN	$P_{tF.40}$	---	---	---	---	---	---	*	*	*	---	*
	CC	$P_{tC.20}$	---	---	---	---	---	---	*	*	*	---	*
7,1	---	$Pt_{0.40}$	46	---	*	---	*	---	*	*	*	*	*
	FAN	$P_{tF.40}$	80	---	121	---	*	---	*	*	*	*	*
	CC	$P_{tC.20}$	189	---	236	---	106	---	146	16	*	*	*
8	---	$Pt_{0.40}$	48	63	6	25	*	*	*	*	*	*	*
	FAN	$P_{tF.40}$	75	86	119	112	9	40	*	*	*	*	*
	CC	$P_{tC.20}$	177	193	228	205	119	137	172	83	*	*	*
9	---	$Pt_{0.40}$	72	64	67	36	*	*	*	*	*	*	*
	FAN	$P_{tF.40}$	69	80	97	121	135	67	*	*	*	*	*
	CC	$P_{tC.20}$	166	178	197	222	219	150	353	393	347	*	*
10	---	$Pt_{0.40}$	71	90	70	84	*	*	*	*	*	*	*
	FAN	$P_{tF.40}$	65	75	92	90	137	182	*	*	*	*	*
	CC	$P_{tC.20}$	156	171	188	171	214	252	349	389	371	*	*
11,2	---	$Pt_{0.40}$	84	87	99	96	68	16	*	*	*	*	*
	FAN	$P_{tF.40}$	62	70	84	98	134	165	87	*	*	*	*
	CC	$P_{tC.20}$	151	158	173	187	205	230	451	563	616	355	*
12,5	---	$Pt_{0.40}$	81	101	98	109	71	107	*	*	*	*	*
	FAN	$P_{tF.40}$	58	68	80	78	123	139	95	*	*	*	*
	CC	$P_{tC.20}$	142	155	165	151	190	199	435	539	606	383	*
14	---	$Pt_{0.40}$	87	96	113	123	122	108	11	*	*	*	*
	FAN	$P_{tF.40}$	56	63	74	86	113	129	167	156	42	*	*
	CC	$P_{tC.20}$	138	144	153	165	175	184	469	626	750	655	347
16	---	$Pt_{0.40}$	83	104	111	120	118	157	20	*	*	*	*
	FAN	$P_{tF.40}$	53	62	71	69	105	120	155	154	62	*	*
	CC	$P_{tC.20}$	130	142	147	134	163	172	439	590	724	652	362
18	---	$Pt_{0.40}$	85	98	117	133	147	151	98	71	*	*	*
	FAN	$P_{tF.40}$	50	57	65	76	97	111	122	172	238	160	*
	CC	$P_{tC.20}$	122	131	135	147	152	160	376	559	787	808	679
20	---	$Pt_{0.40}$	81	100	113	121	140	177	97	72	6	*	*
	FAN	$P_{tF.40}$	47	54	62	61	91	103	115	159	229	171	*
	CC	$P_{tC.20}$	115	125	130	119	142	150	356	520	751	791	657
22,4	---	$Pt_{0.40}$	82	94	113	134	153	168	*	*	*	87	*
	FAN	$P_{tF.40}$	45	51	56	67	83	97	117	94	*	248	*
	CC	$P_{tC.20}$	110	117	118	130	131	140	338	435	521	770	118
25	---	$Pt_{0.40}$	78	96	110	117	145	180	28	*	*	94	*
	FAN	$P_{tF.40}$	42	49	54	54	78	89	106	130	83	236	*
	CC	$P_{tC.20}$	104	113	114	105	123	129	310	444	537	739	265
28	---	$Pt_{0.40}$	59	90	73	128	109	171	29	*	*	*	*
	FAN	$P_{tF.40}$	36	46	45	59	69	84	101	125	83	97	*
	CC	$P_{tC.20}$	88	105	94	114	108	121	295	421	519	562	260
31,5	---	$Pt_{0.40}$	57	69	71	79	104	131	104	111	100	*	*
	FAN	$P_{tF.40}$	34	39	43	44	66	74	84	113	144	160	135
	CC	$P_{tC.20}$	84	89	91	85	103	107	266	389	527	568	574
35,5	---	$Pt_{0.40}$	56	66	70	85	105	125	100	106	98	*	*
	FAN	$P_{tF.40}$	33	37	41	47	61	70	80	106	138	158	134
	CC	$P_{tC.20}$	81	84	86	91	96	101	254	367	506	555	552
40	---	$Pt_{0.40}$	53	65	68	75	101	125	103	116	116	151	*
	FAN	$P_{tF.40}$	31	36	39	40	58	65	75	100	126	155	181
	CC	$P_{tC.20}$	77	82	83	77	91	95	237	345	465	505	567
45	---	$Pt_{0.40}$	52	62	69	81	101	119	99	110	112	149	*
	FAN	$P_{tF.40}$	30	34	39	42	56	62	71	94	120	151	176
	CC	$P_{tC.20}$	74	78	82	83	88	90	227	326	446	491	543

*** Additional Cooling Necessary - Consult Factory**

Nom. Ratio	Cooling Type		SK 5207/ SK 5307	SK 6207/ SK 6307	SK 7207/ SK 7307	SK 8207/ SK 8307	SK 9207/ SK 9307	SK 10207/ SK 10307	SK 11207/ SK 11307	SK 12207/ SK 12307	SK 13207/ SK 13307	SK 14207/ SK 14307	SK 15207/ SK 15307
			Thermal Power										
i_N			P_N [kW]	P_N [kW]	P_N [kW]	P_N [kW]	P_N [kW]	P_N [kW]	P_N [kW]	P_N [kW]	P_N [kW]	P_N [kW]	P_N [kW]
50	---	$Pt_{0.40}$	50	61	67	74	97	120	122	149	178	160	203
	FAN	$P_{tF.40}$	29	33	38	38	53	60	65	85	107	136	160
	CC	$P_{tC.20}$	71	75	79	74	84	86	208	302	409	446	482
56	---	$Pt_{0.40}$	56	58	75	79	117	114	117	141	171	157	195
	FAN	$P_{tF.40}$	29	31	36	41	53	57	62	81	103	132	153
	CC	$P_{tC.20}$	70	71	75	79	83	82	200	286	394	434	460
63	---	$Pt_{0.40}$	54	65	73	78	112	135	114	140	168	216	203
	FAN	$P_{tF.40}$	27	31	34	35	50	56	58	77	95	117	144
	CC	$P_{tC.20}$	67	72	73	68	79	82	188	272	366	394	437
71	---	$Pt_{0.40}$	51	61	69	84	107	128	109	132	162	211	195
	FAN	$P_{tF.40}$	26	29	33	37	47	54	56	73	92	114	138
	CC	$P_{tC.20}$	64	68	69	73	74	78	180	258	353	384	417
80	---	$Pt_{0.40}$	49	59	67	72	101	122	111	141	176	202	244
	FAN	$P_{tF.40}$	25	28	31	32	45	50	50	65	81	105	118
	CC	$P_{tC.20}$	62	66	66	62	70	73	162	234	316	352	363
90	---	$Pt_{0.40}$	47	56	67	78	99	116	107	134	170	197	234
	FAN	$P_{tF.40}$	24	27	31	34	43	48	48	62	78	102	113
	CC	$P_{tC.20}$	59	62	66	67	68	69	156	223	305	343	349
100	---	$Pt_{0.40}$	45	55	65	70	94	113	103	130	163	206	230
	FAN	$P_{tF.40}$	23	26	30	30	41	46	45	59	74	90	108
	CC	$P_{tC.20}$	57	60	64	59	65	67	147	212	286	305	334
112	---	$Pt_{0.40}$	45	52	61	75	94	108	99	124	157	201	221
	FAN	$P_{tF.40}$	22	25	27	33	39	44	44	57	71	88	104
	CC	$P_{tC.20}$	54	57	57	64	62	64	142	203	277	298	321
125	---	$Pt_{0.40}$	43	51	59	63	92	107	---	---	---	189	---
	FAN	$P_{tF.40}$	21	24	26	26	38	42	---	---	---	81	---
	CC	$P_{tC.20}$	51	55	55	52	60	61	---	---	---	276	---
140	---	$Pt_{0.40}$	41	49	59	68	87	104	---	---	---	185	---
	FAN	$P_{tF.40}$	20	22	26	28	36	41	---	---	---	79	---
	CC	$P_{tC.20}$	50	52	55	55	57	59	---	---	---	269	---
160	---	$Pt_{0.40}$	39	47	57	61	85	99	---	---	---	---	---
	FAN	$P_{tF.40}$	19	22	25	25	34	39	---	---	---	---	---
	CC	$P_{tC.20}$	47	50	53	50	54	56	---	---	---	---	---
180	---	$Pt_{0.40}$	32	45	46	65	81	96	---	---	---	---	---
	FAN	$P_{tF.40}$	15	21	20	27	33	37	---	---	---	---	---
	CC	$P_{tC.20}$	38	48	43	53	51	53	---	---	---	---	---
200	---	$Pt_{0.40}$	31	36	45	48	68	91	---	---	---	---	---
	FAN	$P_{tF.40}$	15	17	19	20	27	35	---	---	---	---	---
	CC	$P_{tC.20}$	37	38	41	39	42	51	---	---	---	---	---
224	---	$Pt_{0.40}$	30	35	43	51	65	76	---	---	---	---	---
	FAN	$P_{tF.40}$	14	16	19	21	26	28	---	---	---	---	---
	CC	$P_{tC.20}$	36	37	40	41	40	41	---	---	---	---	---
250	---	$Pt_{0.40}$	29	34	42	45	62	73	---	---	---	---	---
	FAN	$P_{tF.40}$	14	16	18	18	24	27	---	---	---	---	---
	CC	$P_{tC.20}$	34	36	38	36	38	40	---	---	---	---	---
280	---	$Pt_{0.40}$	28	33	42	48	60	70	---	---	---	---	---
	FAN	$P_{tF.40}$	13	15	18	20	23	26	---	---	---	---	---
	CC	$P_{tC.20}$	33	34	38	38	37	38	---	---	---	---	---
315	---	$Pt_{0.40}$	27	32	41	43	59	68	---	---	---	---	---
	FAN	$P_{tF.40}$	13	15	18	18	23	25	---	---	---	---	---
	CC	$P_{tC.20}$	32	34	37	35	36	36	---	---	---	---	---
355	---	$Pt_{0.40}$	---	31	---	46	57	66	---	---	---	---	---
	FAN	$P_{tF.40}$	---	14	---	19	22	25	---	---	---	---	---
	CC	$P_{tC.20}$	---	32	---	37	35	36	---	---	---	---	---
400	---	$Pt_{0.40}$	---	---	---	---	---	64	---	---	---	---	---
	FAN	$P_{tF.40}$	---	---	---	---	---	24	---	---	---	---	---
	CC	$P_{tC.20}$	---	---	---	---	---	34	---	---	---	---	---
450	---	$Pt_{0.40}$	---	---	---	---	---	---	---	---	---	---	---
	FAN	$P_{tF.40}$	---	---	---	---	---	---	---	---	---	---	---
	CC	$P_{tC.20}$	---	---	---	---	---	---	---	---	---	---	---

Thermal Ratings
M5 Mounting - 1500 rpm
@ 20°C = 68°F

Nom. Ratio	Cooling Type		SK 5207/ SK 5307	SK 6207/ SK 6307	SK 7207/ SK 7307	SK 8207/ SK 8307	SK 9207/ SK 9307	SK 10207/ SK 10307	SK 11207/ SK 11307	SK 12207/ SK 12307	SK 13207/ SK 13307	SK 14207/ SK 14307	SK 15207/ SK 15307
			Thermal Power										
i_N			P_N [kW]	P_N [kW]	P_N [kW]	P_N [kW]	P_N [kW]	P_N [kW]	P_N [kW]	P_N [kW]	P_N [kW]	P_N [kW]	P_N [kW]
5,6	---	$Pt_{0.20}$	---	---	---	---	---	---	*	*	*	---	*
	FAN	$P_{tF.20}$	---	---	---	---	---	---	*	*	*	---	*
	CC	$P_{tC.20}$	---	---	---	---	---	---	*	*	*	---	*
6,3	---	$Pt_{0.20}$	---	---	---	---	---	---	*	*	*	---	*
	FAN	$P_{tF.20}$	---	---	---	---	---	---	*	*	*	---	*
	CC	$P_{tC.20}$	---	---	---	---	---	---	*	*	*	---	*
7,1	---	$Pt_{0.20}$	4	---	*	---	*	---	*	*	*	*	*
	FAN	$P_{tF.20}$	112	---	61	---	*	---	*	*	*	*	*
	CC	$P_{tC.20}$	217	---	177	---	*	---	*	*	*	*	*
8	---	$Pt_{0.20}$	12	23	*	*	*	*	*	*	*	*	*
	FAN	$P_{tF.20}$	104	120	75	95	*	*	*	*	*	*	*
	CC	$P_{tC.20}$	202	220	183	182	*	*	*	*	*	*	*
9	---	$Pt_{0.20}$	61	31	11	*	*	*	*	*	*	*	*
	FAN	$P_{tF.20}$	89	109	139	115	13	*	*	*	*	*	*
	CC	$P_{tC.20}$	181	201	233	209	97	*	55	*	*	*	*
10	---	$Pt_{0.20}$	61	81	22	46	*	*	*	*	*	*	*
	FAN	$P_{tF.20}$	83	96	130	123	37	84	*	*	*	*	*
	CC	$P_{tC.20}$	170	185	219	195	110	138	95	*	*	*	*
11,2	---	$Pt_{0.20}$	85	80	84	58	*	*	*	*	*	*	*
	FAN	$P_{tF.20}$	79	89	108	132	166	102	*	*	*	*	*
	CC	$P_{tC.20}$	162	171	189	211	222	150	327	342	174	*	*
12,5	---	$Pt_{0.20}$	82	105	86	102	*	20	*	*	*	*	*
	FAN	$P_{tF.20}$	74	86	103	101	166	200	*	*	*	*	*
	CC	$P_{tC.20}$	152	166	181	164	217	241	324	343	214	*	*
14	---	$Pt_{0.20}$	94	101	115	116	90	37	*	*	*	*	*
	FAN	$P_{tF.20}$	71	80	93	110	149	181	101	*	*	*	*
	CC	$P_{tC.20}$	147	154	165	180	195	218	426	520	545	190	*
16	---	$Pt_{0.20}$	90	114	114	127	91	134	*	*	*	*	*
	FAN	$P_{tF.20}$	67	77	89	88	138	155	107	*	*	*	*
	CC	$P_{tC.20}$	138	150	158	144	182	190	411	497	540	230	*
18	---	$Pt_{0.20}$	96	108	129	142	145	133	28	*	*	*	*
	FAN	$P_{tF.20}$	62	72	81	96	124	144	176	188	109	*	*
	CC	$P_{tC.20}$	129	140	144	158	164	176	435	597	713	600	304
20	---	$Pt_{0.20}$	92	114	126	137	139	183	35	*	*	*	*
	FAN	$P_{tF.20}$	59	68	78	77	116	131	164	184	120	*	*
	CC	$P_{tC.20}$	122	132	139	127	154	161	409	564	690	599	319
22,4	---	$Pt_{0.20}$	95	108	130	151	167	175	*	*	*	*	*
	FAN	$P_{tF.20}$	55	63	70	84	105	122	49	*	*	236	*
	CC	$P_{tC.20}$	116	123	125	138	139	150	292	348	356	787	*
25	---	$Pt_{0.20}$	91	112	127	136	159	201	*	*	*	*	*
	FAN	$P_{tF.20}$	53	61	68	67	99	111	93	30	*	241	*
	CC	$P_{tC.20}$	110	119	121	111	131	137	308	384	422	770	*
28	---	$Pt_{0.20}$	65	106	78	149	110	191	*	*	*	*	*
	FAN	$P_{tF.20}$	45	57	56	73	88	105	91	33	*	*	*
	CC	$P_{tC.20}$	93	111	100	120	117	129	296	366	410	405	*
31,5	---	$Pt_{0.20}$	63	78	76	87	105	138	84	65	*	*	*
	FAN	$P_{tF.20}$	43	49	54	55	84	93	110	153	209	*	*
	CC	$P_{tC.20}$	89	95	97	90	111	114	292	436	610	463	403
35,5	---	$Pt_{0.20}$	63	75	76	93	111	132	82	64	*	*	*
	FAN	$P_{tF.20}$	41	46	51	59	78	88	105	144	204	*	*
	CC	$P_{tC.20}$	85	89	91	97	103	108	279	410	588	454	391
40	---	$Pt_{0.20}$	60	74	74	84	106	136	92	87	50	76	*
	FAN	$P_{tF.20}$	39	44	49	50	74	82	97	132	174	214	*
	CC	$P_{tC.20}$	82	87	88	82	98	101	259	382	526	573	445
45	---	$Pt_{0.20}$	59	71	76	90	109	130	89	83	51	78	*
	FAN	$P_{tF.20}$	37	42	49	53	71	78	92	124	167	207	*
	CC	$P_{tC.20}$	78	82	87	88	94	96	248	361	505	556	429

*** Additional Cooling Necessary - Consult Factory**

Nom. Ratio	Cooling Type		SK 5207/ SK 5307	SK 6207/ SK 6307	SK 7207/ SK 7307	SK 8207/ SK 8307	SK 9207/ SK 9307	SK 10207/ SK 10307	SK 11207/ SK 11307	SK 12207/ SK 12307	SK 13207/ SK 13307	SK 14207/ SK 14307	SK 15207/ SK 15307
			Thermal Power										
i_N			P_N [kW]	P_N [kW]	P_N [kW]	P_N [kW]	P_N [kW]	P_N [kW]	P_N [kW]	P_N [kW]	P_N [kW]	P_N [kW]	P_N [kW]
50	---	$Pt_{0.20}$	57	70	74	83	104	132	132	154	175	114	155
	FAN	$P_{tF.20}$	36	41	47	47	67	75	81	108	136	181	210
	CC	$P_{tC.20}$	75	79	84	78	89	92	223	325	443	496	532
56	---	$Pt_{0.20}$	66	67	89	89	137	126	127	146	170	113	151
	FAN	$P_{tF.20}$	35	39	44	51	66	71	78	102	131	176	200
	CC	$P_{tC.20}$	74	75	79	84	88	88	214	308	426	483	508
63	---	$Pt_{0.20}$	64	77	86	93	131	159	125	148	171	225	173
	FAN	$P_{tF.20}$	34	39	43	43	62	70	73	97	121	149	187
	CC	$P_{tC.20}$	71	76	77	71	83	86	201	292	395	425	478
71	---	$Pt_{0.20}$	61	73	82	100	125	151	120	140	166	220	167
	FAN	$P_{tF.20}$	32	36	40	46	59	66	70	92	116	145	178
	CC	$P_{tC.20}$	68	71	72	77	78	82	193	277	381	414	457
80	---	$Pt_{0.20}$	59	71	80	86	119	145	128	160	198	215	265
	FAN	$P_{tF.20}$	31	35	39	39	56	62	62	81	101	132	148
	CC	$P_{tC.20}$	65	69	70	65	74	77	172	249	337	379	388
90	---	$Pt_{0.20}$	56	67	79	92	117	138	124	152	191	210	255
	FAN	$P_{tF.20}$	30	33	39	42	54	59	60	77	98	129	142
	CC	$P_{tC.20}$	62	65	70	70	72	73	165	237	325	369	373
100	---	$Pt_{0.20}$	54	65	77	83	111	135	119	149	184	235	253
	FAN	$P_{tF.20}$	28	32	37	38	51	57	56	74	92	112	136
	CC	$P_{tC.20}$	60	63	67	62	68	70	156	226	305	324	357
112	---	$Pt_{0.20}$	54	62	73	89	113	128	114	141	178	230	243
	FAN	$P_{tF.20}$	27	31	33	41	49	54	54	70	89	109	130
	CC	$P_{tC.20}$	57	60	60	67	65	67	151	215	295	317	343
125	---	$Pt_{0.20}$	51	62	71	76	110	128	---	---	---	218	---
	FAN	$P_{tF.20}$	26	29	32	33	47	52	---	---	---	101	---
	CC	$P_{tC.20}$	54	58	58	54	63	64	---	---	---	293	---
140	---	$Pt_{0.20}$	50	59	71	82	105	125	---	---	---	213	---
	FAN	$P_{tF.20}$	25	28	32	35	45	50	---	---	---	99	---
	CC	$P_{tC.20}$	52	54	58	58	60	62	---	---	---	287	---
160	---	$Pt_{0.20}$	48	57	69	74	102	119	---	---	---	---	---
	FAN	$P_{tF.20}$	24	27	31	31	42	48	---	---	---	---	---
	CC	$P_{tC.20}$	50	53	56	52	57	59	---	---	---	---	---
180	---	$Pt_{0.20}$	39	54	56	79	97	116	---	---	---	---	---
	FAN	$P_{tF.20}$	19	26	25	34	40	45	---	---	---	---	---
	CC	$P_{tC.20}$	39	50	45	56	54	56	---	---	---	---	---
200	---	$Pt_{0.20}$	37	44	54	59	82	111	---	---	---	---	---
	FAN	$P_{tF.20}$	18	20	24	25	33	43	---	---	---	---	---
	CC	$P_{tC.20}$	38	40	43	41	44	53	---	---	---	---	---
224	---	$Pt_{0.20}$	36	42	52	62	79	93	---	---	---	---	---
	FAN	$P_{tF.20}$	18	19	23	26	31	35	---	---	---	---	---
	CC	$P_{tC.20}$	37	38	41	43	42	43	---	---	---	---	---
250	---	$Pt_{0.20}$	35	41	51	55	76	89	---	---	---	---	---
	FAN	$P_{tF.20}$	17	19	22	23	30	34	---	---	---	---	---
	CC	$P_{tC.20}$	36	38	40	38	40	41	---	---	---	---	---
280	---	$Pt_{0.20}$	34	40	51	58	73	86	---	---	---	---	---
	FAN	$P_{tF.20}$	16	18	22	24	29	32	---	---	---	---	---
	CC	$P_{tC.20}$	35	36	40	40	39	40	---	---	---	---	---
315	---	$Pt_{0.20}$	33	39	49	53	71	82	---	---	---	---	---
	FAN	$P_{tF.20}$	16	18	22	22	28	31	---	---	---	---	---
	CC	$P_{tC.20}$	33	35	39	37	38	38	---	---	---	---	---
355	---	$Pt_{0.20}$	---	37	---	56	69	81	---	---	---	---	---
	FAN	$P_{tF.20}$	---	17	---	23	27	30	---	---	---	---	---
	CC	$P_{tC.20}$	---	34	---	39	36	37	---	---	---	---	---
400	---	$Pt_{0.20}$	---	---	---	---	---	78	---	---	---	---	---
	FAN	$P_{tF.20}$	---	---	---	---	---	29	---	---	---	---	---
	CC	$P_{tC.20}$	---	---	---	---	---	36	---	---	---	---	---
450	---	$Pt_{0.20}$	---	---	---	---	---	---	---	---	---	---	---
	FAN	$P_{tF.20}$	---	---	---	---	---	---	---	---	---	---	---
	CC	$P_{tC.20}$	---	---	---	---	---	---	---	---	---	---	---

Thermal Ratings
M5 Mounting - 1500 rpm
@ 40ºC = 104ºF



Nom. Ratio	Cooling Type		SK 5207/ SK 5307	SK 6207/ SK 6307	SK 7207/ SK 7307	SK 8207/ SK 8307	SK 9207/ SK 9307	SK 10207/ SK 10307	SK 11207/ SK 11307	SK 12207/ SK 12307	SK 13207/ SK 13307	SK 14207/ SK 14307	SK 15207/ SK 15307
			Thermal Power										
i_N			P_N [kW]	P_N [kW]	P_N [kW]	P_N [kW]	P_N [kW]	P_N [kW]	P_N [kW]	P_N [kW]	P_N [kW]	P_N [kW]	P_N [kW]
5,6	---	$Pt_{0.40}$	---	---	---	---	---	---	*	*	*	---	*
	FAN	$P_{tF.40}$	---	---	---	---	---	---	*	*	*	---	*
	CC	$P_{tC.20}$	---	---	---	---	---	---	*	*	*	---	*
6,3	---	$Pt_{0.40}$	---	---	---	---	---	---	*	*	*	---	*
	FAN	$P_{tF.40}$	---	---	---	---	---	---	*	*	*	---	*
	CC	$P_{tC.20}$	---	---	---	---	---	---	*	*	*	---	*
7,1	---	$Pt_{0.40}$	*	---	*	---	*	---	*	*	*	*	*
	FAN	$P_{tF.40}$	70	---	*	---	*	---	*	*	*	*	*
	CC	$P_{tC.20}$	195	---	134	---	*	---	*	*	*	*	*
8	---	$Pt_{0.40}$	*	*	*	*	*	---	*	*	*	*	*
	FAN	$P_{tF.40}$	73	91	*	15	*	---	*	*	*	*	*
	CC	$P_{tC.20}$	189	213	143	140	*	---	*	*	*	*	*
9	---	$Pt_{0.40}$	28	*	*	*	*	---	*	*	*	*	*
	FAN	$P_{tF.40}$	82	93	90	30	*	---	*	*	*	*	*
	CC	$P_{tC.20}$	190	205	208	164	14	---	*	*	*	*	*
10	---	$Pt_{0.40}$	31	46	*	*	*	*	*	*	*	*	*
	FAN	$P_{tF.40}$	77	88	95	111	*	*	*	*	*	*	*
	CC	$P_{tC.20}$	178	193	207	205	38	53	*	*	*	*	*
11,2	---	$Pt_{0.40}$	59	48	40	*	*	*	*	*	*	*	*
	FAN	$P_{tF.40}$	70	81	101	128	78	*	*	*	*	*	*
	CC	$P_{tC.20}$	167	178	202	231	167	77	260	250	1	*	*
12,5	---	$Pt_{0.40}$	58	76	45	62	*	*	*	*	*	*	*
	FAN	$P_{tF.40}$	66	76	96	92	85	128	*	*	*	*	*
	CC	$P_{tC.20}$	157	171	192	173	167	200	262	260	68	*	*
14	---	$Pt_{0.40}$	71	73	81	72	23	*	*	*	*	*	*
	FAN	$P_{tF.40}$	62	70	83	100	144	132	*	*	*	*	*
	CC	$P_{tC.20}$	151	159	172	189	216	199	372	448	447	*	*
16	---	$Pt_{0.40}$	69	88	81	94	31	68	*	*	*	*	*
	FAN	$P_{tF.40}$	59	68	80	78	132	144	*	*	*	*	*
	CC	$P_{tC.20}$	142	154	164	150	199	204	360	430	448	54	*
18	---	$Pt_{0.40}$	76	84	100	105	97	72	*	*	*	*	*
	FAN	$P_{tF.40}$	54	63	72	85	111	132	121	65	*	*	*
	CC	$P_{tC.20}$	132	143	149	164	172	188	418	538	635	485	135
20	---	$Pt_{0.40}$	73	91	98	108	94	130	*	*	*	*	*
	FAN	$P_{tF.40}$	51	59	69	68	104	117	121	71	*	*	*
	CC	$P_{tC.20}$	125	136	143	131	161	169	401	509	616	489	167
22,4	---	$Pt_{0.40}$	78	87	105	119	128	126	*	*	*	*	*
	FAN	$P_{tF.40}$	48	55	62	74	93	109	*	*	*	43	*
	CC	$P_{tC.20}$	118	126	129	143	145	157	252	296	283	696	*
25	---	$Pt_{0.40}$	74	92	103	111	122	157	*	*	*	*	*
	FAN	$P_{tF.40}$	46	53	59	59	87	99	12	*	*	61	*
	CC	$P_{tC.20}$	112	121	124	114	136	142	271	336	358	682	*
28	---	$Pt_{0.40}$	51	87	58	122	76	150	*	*	*	*	*
	FAN	$P_{tF.40}$	39	49	49	64	79	92	15	*	*	*	*
	CC	$P_{tC.20}$	95	113	103	124	123	134	261	320	349	322	*
31,5	---	$Pt_{0.40}$	49	62	57	67	73	101	33	*	*	*	*
	FAN	$P_{tF.40}$	37	42	48	48	75	83	106	143	107	*	*
	CC	$P_{tC.20}$	91	97	100	93	116	120	311	459	556	390	306
35,5	---	$Pt_{0.40}$	49	59	58	72	81	97	34	*	*	*	*
	FAN	$P_{tF.40}$	36	40	45	51	69	79	100	137	106	*	*
	CC	$P_{tC.20}$	87	92	94	100	108	113	296	434	536	384	299
40	---	$Pt_{0.40}$	48	60	57	66	78	104	50	23	*	*	*
	FAN	$P_{tF.40}$	34	39	43	43	66	73	90	130	138	182	*
	CC	$P_{tC.20}$	84	89	91	84	102	105	272	408	529	588	361
45	---	$Pt_{0.40}$	47	57	59	71	82	99	49	24	*	*	*
	FAN	$P_{tF.40}$	33	37	43	46	63	69	86	122	134	180	*
	CC	$P_{tC.20}$	80	84	89	90	98	100	260	385	510	574	349

*** Additional Cooling Necessary - Consult Factory**

Nom. Ratio	Cooling Type		SK 5207/ SK 5307	SK 6207/ SK 6307	SK 7207/ SK 7307	SK 8207/ SK 8307	SK 9207/ SK 9307	SK 10207/ SK 10307	SK 11207/ SK 11307	SK 12207/ SK 12307	SK 13207/ SK 13307	SK 14207/ SK 14307	SK 15207/ SK 15307
			Thermal Power										
i_N			P_N [kW]	P_N [kW]	P_N [kW]	P_N [kW]	P_N [kW]	P_N [kW]	P_N [kW]	P_N [kW]	P_N [kW]	P_N [kW]	P_N [kW]
50	---	$Pt_{0.40}$	45	56	58	66	79	103	99	110	116	20	50
	FAN	$P_{tF.40}$	31	35	41	41	60	66	73	97	124	182	204
	CC	$P_{tC.20}$	76	81	86	80	93	96	231	337	459	537	569
56	---	$Pt_{0.40}$	55	54	73	71	113	98	95	104	113	22	51
	FAN	$P_{tF.40}$	31	34	38	44	58	63	70	92	119	176	193
	CC	$P_{tC.20}$	76	77	81	86	90	91	221	319	442	521	543
63	---	$Pt_{0.40}$	53	64	71	77	108	132	95	108	119	161	85
	FAN	$P_{tF.40}$	29	33	37	37	55	61	65	87	110	134	176
	CC	$P_{tC.20}$	72	77	78	73	86	89	208	302	409	441	505
71	---	$Pt_{0.40}$	51	61	68	83	104	125	91	103	115	158	83
	FAN	$P_{tF.40}$	28	32	35	40	51	58	63	82	105	131	167
	CC	$P_{tC.20}$	69	73	74	78	80	84	199	287	394	430	482
80	---	$Pt_{0.40}$	49	59	66	72	99	121	104	127	155	158	200
	FAN	$P_{tF.40}$	27	31	34	34	49	55	55	72	90	119	132
	CC	$P_{tC.20}$	66	71	72	67	76	79	177	256	346	393	401
90	---	$Pt_{0.40}$	47	56	66	77	97	115	100	121	150	155	193
	FAN	$P_{tF.40}$	26	29	34	37	47	52	53	69	87	116	127
	CC	$P_{tC.20}$	64	67	71	72	74	75	170	244	335	383	385
100	---	$Pt_{0.40}$	45	55	64	69	93	113	96	119	145	188	194
	FAN	$P_{tF.40}$	25	28	32	33	45	50	50	66	82	99	121
	CC	$P_{tC.20}$	61	65	69	64	70	73	161	232	314	334	368
112	---	$Pt_{0.40}$	45	52	62	75	95	107	93	113	141	184	187
	FAN	$P_{tF.40}$	23	27	29	35	42	48	48	62	79	97	116
	CC	$P_{tC.20}$	58	61	61	69	67	69	155	222	303	326	354
125	---	$Pt_{0.40}$	43	52	60	65	93	109	---	---	---	175	---
	FAN	$P_{tF.40}$	22	25	28	28	41	45	---	---	---	90	---
	CC	$P_{tC.20}$	55	59	59	55	64	66	---	---	---	302	---
140	---	$Pt_{0.40}$	42	50	60	69	88	106	---	---	---	171	---
	FAN	$P_{tF.40}$	21	24	28	30	39	44	---	---	---	88	---
	CC	$P_{tC.20}$	53	56	59	59	61	64	---	---	---	295	---
160	---	$Pt_{0.40}$	40	48	58	62	87	101	---	---	---	---	---
	FAN	$P_{tF.40}$	21	23	27	27	37	42	---	---	---	---	---
	CC	$P_{tC.20}$	51	54	57	53	58	61	---	---	---	---	---
180	---	$Pt_{0.40}$	33	46	47	67	83	99	---	---	---	---	---
	FAN	$P_{tF.40}$	16	22	21	29	35	40	---	---	---	---	---
	CC	$P_{tC.20}$	40	51	45	57	55	57	---	---	---	---	---
200	---	$Pt_{0.40}$	32	37	46	50	70	94	---	---	---	---	---
	FAN	$P_{tF.40}$	16	18	21	21	29	38	---	---	---	---	---
	CC	$P_{tC.20}$	39	41	44	42	45	55	---	---	---	---	---
224	---	$Pt_{0.40}$	31	36	44	53	67	79	---	---	---	---	---
	FAN	$P_{tF.40}$	15	17	20	22	27	30	---	---	---	---	---
	CC	$P_{tC.20}$	38	39	42	44	43	44	---	---	---	---	---
250	---	$Pt_{0.40}$	30	35	43	46	65	76	---	---	---	---	---
	FAN	$P_{tF.40}$	15	16	19	20	26	29	---	---	---	---	---
	CC	$P_{tC.20}$	36	38	41	39	41	43	---	---	---	---	---
280	---	$Pt_{0.40}$	29	34	43	49	62	73	---	---	---	---	---
	FAN	$P_{tF.40}$	14	16	19	21	25	28	---	---	---	---	---
	CC	$P_{tC.20}$	35	37	41	41	40	41	---	---	---	---	---
315	---	$Pt_{0.40}$	28	33	42	45	61	70	---	---	---	---	---
	FAN	$P_{tF.40}$	14	15	19	19	25	27	---	---	---	---	---
	CC	$P_{tC.20}$	34	36	40	37	39	39	---	---	---	---	---
355	---	$Pt_{0.40}$	---	32	---	48	59	69	---	---	---	---	---
	FAN	$P_{tF.40}$	---	15	---	20	24	26	---	---	---	---	---
	CC	$P_{tC.20}$	---	34	---	40	37	38	---	---	---	---	---
400	---	$Pt_{0.40}$	---	---	---	---	---	66	---	---	---	---	---
	FAN	$P_{tF.40}$	---	---	---	---	---	25	---	---	---	---	---
	CC	$P_{tC.20}$	---	---	---	---	---	37	---	---	---	---	---
450	---	$Pt_{0.40}$	---	---	---	---	---	---	---	---	---	---	---
	FAN	$P_{tF.40}$	---	---	---	---	---	---	---	---	---	---	---
	CC	$P_{tC.20}$	---	---	---	---	---	---	---	---	---	---	---

Thermal Ratings
M5 Mounting - 1800 rpm
@ 20ºC = 68ºF

Nom. Ratio	Cooling Type		SK 5207/ SK 5307	SK 6207/ SK 6307	SK 7207/ SK 7307	SK 8207/ SK 8307	SK 9207/ SK 9307	SK 10207/ SK 10307	SK 11207/ SK 11307	SK 12207/ SK 12307	SK 13207/ SK 13307	SK 14207/ SK 14307	SK 15207/ SK 15307
			Thermal Power										
i_N			P_N [kW]	P_N [kW]	P_N [kW]	P_N [kW]	P_N [kW]	P_N [kW]	P_N [kW]	P_N [kW]	P_N [kW]	P_N [kW]	P_N [kW]
5,6	---	$Pt_{0.20}$	---	---	---	---	---	---	*	*	*	---	*
	FAN	$P_{tF.20}$	---	---	---	---	---	---	*	*	*	---	*
	CC	$P_{tC.20}$	---	---	---	---	---	---	*	*	*	---	*
6,3	---	$Pt_{0.20}$	---	---	---	---	---	---	*	*	*	---	*
	FAN	$P_{tF.20}$	---	---	---	---	---	---	*	*	*	---	*
	CC	$P_{tC.20}$	---	---	---	---	---	---	*	*	*	---	*
7,1	---	$Pt_{0.20}$	*	---	*	---	*	---	*	*	*	*	*
	FAN	$P_{tF.20}$	33	---	*	---	*	---	*	*	*	*	*
	CC	$P_{tC.20}$	160	---	1	---	*	---	*	*	*	*	*
8	---	$Pt_{0.20}$	*	*	*	*	*	*	*	*	*	*	*
	FAN	$P_{tF.20}$	42	56	*	*	*	*	*	*	*	*	*
	CC	$P_{tC.20}$	159	176	29	32	*	*	*	*	*	*	*
9	---	$Pt_{0.20}$	*	*	*	*	*	*	*	*	*	*	*
	FAN	$P_{tF.20}$	106	67	38	*	*	*	*	*	*	*	*
	CC	$P_{tC.20}$	208	175	157	55	*	*	*	*	*	*	*
10	---	$Pt_{0.20}$	2	15	*	*	*	*	*	*	*	*	*
	FAN	$P_{tF.20}$	103	117	53	78	*	*	*	*	*	*	*
	CC	$P_{tC.20}$	198	215	163	165	*	*	*	*	*	*	*
11,2	---	$Pt_{0.20}$	48	22	*	*	*	*	*	*	*	*	*
	FAN	$P_{tF.20}$	89	107	133	95	*	*	*	*	*	*	*
	CC	$P_{tC.20}$	180	197	225	189	52	*	*	*	*	*	*
12,5	---	$Pt_{0.20}$	49	69	2	29	*	*	*	*	*	*	*
	FAN	$P_{tF.20}$	83	96	133	124	*	38	*	*	*	*	*
	CC	$P_{tC.20}$	169	183	220	195	69	98	19	*	*	*	*
14	---	$Pt_{0.20}$	71	69	70	40	*	*	*	*	*	*	*
	FAN	$P_{tF.20}$	78	88	106	133	141	61	*	*	*	*	*
	CC	$P_{tC.20}$	159	169	185	211	196	113	253	234	*	*	*
16	---	$Pt_{0.20}$	70	91	72	89	*	*	*	*	*	*	*
	FAN	$P_{tF.20}$	73	84	101	98	142	196	*	*	*	*	*
	CC	$P_{tC.20}$	150	163	177	160	193	236	254	241	57	*	*
18	---	$Pt_{0.20}$	83	88	104	101	73	8	*	*	*	*	*
	FAN	$P_{tF.20}$	67	78	89	108	144	186	54	*	*	*	*
	CC	$P_{tC.20}$	139	151	157	175	188	223	372	448	471	32	*
20	---	$Pt_{0.20}$	80	101	103	116	74	116	*	*	*	*	*
	FAN	$P_{tF.20}$	63	73	86	84	134	149	63	*	*	*	*
	CC	$P_{tC.20}$	131	142	151	138	176	182	360	429	466	84	*
22,4	---	$Pt_{0.20}$	88	96	118	129	131	115	*	*	*	*	*
	FAN	$P_{tF.20}$	59	68	76	92	116	139	*	*	*	*	*
	CC	$P_{tC.20}$	123	132	135	151	154	169	155	123	*	534	*
25	---	$Pt_{0.20}$	85	106	115	126	126	167	*	*	*	*	*
	FAN	$P_{tF.20}$	56	65	73	73	109	122	*	*	*	*	*
	CC	$P_{tC.20}$	117	126	130	119	144	150	203	213	127	532	*
28	---	$Pt_{0.20}$	54	100	56	139	62	160	*	*	*	*	*
	FAN	$P_{tF.20}$	49	61	62	79	101	115	*	*	*	*	*
	CC	$P_{tC.20}$	100	118	109	130	133	141	197	206	131	*	*
31,5	---	$Pt_{0.20}$	52	68	56	69	60	94	*	*	*	*	*
	FAN	$P_{tF.20}$	46	52	60	60	96	105	124	100	*	*	*
	CC	$P_{tC.20}$	96	102	106	98	126	129	331	429	492	173	*
35,5	---	$Pt_{0.20}$	54	65	60	74	77	91	*	*	*	*	*
	FAN	$P_{tF.20}$	44	50	56	64	87	99	121	98	*	*	*
	CC	$P_{tC.20}$	92	96	99	105	115	122	319	407	477	176	*
40	---	$Pt_{0.20}$	52	66	59	70	74	105	10	*	*	*	*
	FAN	$P_{tF.20}$	42	48	54	54	83	91	126	129	71	105	*
	CC	$P_{tC.20}$	88	93	96	89	110	112	308	415	488	534	102
45	---	$Pt_{0.20}$	52	63	62	75	82	101	11	*	*	*	*
	FAN	$P_{tF.20}$	40	45	53	58	79	87	119	124	72	108	*
	CC	$P_{tC.20}$	84	88	94	95	104	106	294	394	472	523	106

*** Additional Cooling Necessary - Consult Factory**

Nom. Ratio	Cooling Type		SK 5207/ SK 5307	SK 6207/ SK 6307	SK 7207/ SK 7307	SK 8207/ SK 8307	SK 9207/ SK 9307	SK 10207/ SK 10307	SK 11207/ SK 11307	SK 12207/ SK 12307	SK 13207/ SK 13307	SK 14207/ SK 14307	SK 15207/ SK 15307
			Thermal Power										
i_N			P_N [kW]	P_N [kW]	P_N [kW]	P_N [kW]	P_N [kW]	P_N [kW]	P_N [kW]	P_N [kW]	P_N [kW]	P_N [kW]	P_N [kW]
50	---	$Pt_{0.20}$	50	63	61	72	78	107	99	99	88	*	*
	FAN	$P_{tF.20}$	39	44	51	51	75	83	91	123	160	159	208
	CC	$P_{tC.20}$	80	85	91	84	99	101	246	361	498	525	578
56	---	$Pt_{0.20}$	64	60	85	77	130	103	96	95	87	*	*
	FAN	$P_{tF.20}$	38	41	47	55	71	79	87	117	153	157	203
	CC	$P_{tC.20}$	79	80	85	90	94	96	236	342	479	513	556
63	---	$Pt_{0.20}$	62	75	82	91	123	153	98	104	102	146	*
	FAN	$P_{tF.20}$	36	41	46	46	67	75	82	110	140	170	235
	CC	$P_{tC.20}$	75	80	82	76	90	93	220	323	441	475	565
71	---	$Pt_{0.20}$	59	72	79	97	120	145	94	99	99	144	*
	FAN	$P_{tF.20}$	34	39	43	49	63	72	78	104	135	166	227
	CC	$P_{tC.20}$	72	76	77	82	84	88	212	307	425	462	542
80	---	$Pt_{0.20}$	57	70	77	84	114	141	117	141	168	153	203
	FAN	$P_{tF.20}$	33	38	42	42	60	67	68	89	112	150	165
	CC	$P_{tC.20}$	69	73	74	69	80	83	186	269	366	421	426
90	---	$Pt_{0.20}$	55	66	77	90	113	134	113	134	162	150	196
	FAN	$P_{tF.20}$	32	35	41	45	58	64	65	85	108	146	158
	CC	$P_{tC.20}$	66	69	74	74	77	78	179	257	353	410	409
100	---	$Pt_{0.20}$	53	65	75	82	107	132	109	132	159	209	201
	FAN	$P_{tF.20}$	30	34	40	40	55	61	61	81	101	122	150
	CC	$P_{tC.20}$	63	67	71	66	73	76	169	245	331	352	390
112	---	$Pt_{0.20}$	54	61	74	88	112	125	105	126	154	205	194
	FAN	$P_{tF.20}$	29	33	35	43	52	58	59	77	97	119	144
	CC	$P_{tC.20}$	60	64	64	71	69	72	163	233	320	344	375
125	---	$Pt_{0.20}$	52	62	71	77	109	129	---	---	---	196	---
	FAN	$P_{tF.20}$	27	31	34	35	50	55	---	---	---	111	---
	CC	$P_{tC.20}$	57	61	62	58	67	68	---	---	---	318	---
140	---	$Pt_{0.20}$	50	59	71	83	104	126	---	---	---	192	---
	FAN	$P_{tF.20}$	26	29	34	37	48	53	---	---	---	108	---
	CC	$P_{tC.20}$	55	58	61	62	64	66	---	---	---	311	---
160	---	$Pt_{0.20}$	48	57	69	74	103	120	---	---	---	---	---
	FAN	$P_{tF.20}$	25	29	33	33	45	51	---	---	---	---	---
	CC	$P_{tC.20}$	53	56	59	55	60	63	---	---	---	---	---
180	---	$Pt_{0.20}$	39	55	57	80	98	118	---	---	---	---	---
	FAN	$P_{tF.20}$	20	27	26	36	43	48	---	---	---	---	---
	CC	$P_{tC.20}$	41	53	47	59	58	59	---	---	---	---	---
200	---	$Pt_{0.20}$	38	45	55	60	84	112	---	---	---	---	---
	FAN	$P_{tF.20}$	19	21	25	26	35	46	---	---	---	---	---
	CC	$P_{tC.20}$	40	42	46	43	46	57	---	---	---	---	---
224	---	$Pt_{0.20}$	37	43	53	64	81	95	---	---	---	---	---
	FAN	$P_{tF.20}$	18	20	24	27	33	37	---	---	---	---	---
	CC	$P_{tC.20}$	39	40	44	46	45	46	---	---	---	---	---
250	---	$Pt_{0.20}$	36	42	52	56	78	92	---	---	---	---	---
	FAN	$P_{tF.20}$	18	20	24	24	32	36	---	---	---	---	---
	CC	$P_{tC.20}$	38	39	42	40	43	44	---	---	---	---	---
280	---	$Pt_{0.20}$	35	41	51	59	75	88	---	---	---	---	---
	FAN	$P_{tF.20}$	17	19	24	26	31	34	---	---	---	---	---
	CC	$P_{tC.20}$	36	38	42	42	41	42	---	---	---	---	---
315	---	$Pt_{0.20}$	34	40	50	54	73	85	---	---	---	---	---
	FAN	$P_{tF.20}$	17	19	23	23	30	33	---	---	---	---	---
	CC	$P_{tC.20}$	35	37	41	39	40	40	---	---	---	---	---
355	---	$Pt_{0.20}$	---	38	---	57	71	83	---	---	---	---	---
	FAN	$P_{tF.20}$	---	18	---	25	29	32	---	---	---	---	---
	CC	$P_{tC.20}$	---	35	---	41	39	40	---	---	---	---	---
400	---	$Pt_{0.20}$	---	---	---	---	---	80	---	---	---	---	---
	FAN	$P_{tF.20}$	---	---	---	---	---	31	---	---	---	---	---
	CC	$P_{tC.20}$	---	---	---	---	---	38	---	---	---	---	---
450	---	$Pt_{0.20}$	---	---	---	---	---	---	---	---	---	---	---
	FAN	$P_{tF.20}$	---	---	---	---	---	---	---	---	---	---	---
	CC	$P_{tC.20}$	---	---	---	---	---	---	---	---	---	---	---

Thermal Ratings
M5 Mounting - 1800 rpm
@ 40ºC = 104ºF

Nom. Ratio	Cooling Type		SK 5207/ SK 5307	SK 6207/ SK 6307	SK 7207/ SK 7307	SK 8207/ SK 8307	SK 9207/ SK 9307	SK 10207/ SK 10307	SK 11207/ SK 11307	SK 12207/ SK 12307	SK 13207/ SK 13307	SK 14207/ SK 14307	SK 15207/ SK 15307
			Thermal Power										
i_N			P_N [kW]	P_N [kW]	P_N [kW]	P_N [kW]	P_N [kW]	P_N [kW]	P_N [kW]	P_N [kW]	P_N [kW]	P_N [kW]	P_N [kW]
5,6	---	$Pt_{0.40}$	---	---	---	---	---	---	*	*	*	---	*
	FAN	$P_{tF.40}$	---	---	---	---	---	---	*	*	*	---	*
	CC	$P_{tC.20}$	---	---	---	---	---	---	*	*	*	---	*
6,3	---	$Pt_{0.40}$	---	---	---	---	---	---	*	*	*	---	*
	FAN	$P_{tF.40}$	---	---	---	---	---	---	*	*	*	---	*
	CC	$P_{tC.20}$	---	---	---	---	---	---	*	*	*	---	*
7,1	---	$Pt_{0.40}$	*	---	*	---	*	---	*	*	*	*	*
	FAN	$P_{tF.40}$	*	---	*	---	*	---	*	*	*	*	*
	CC	$P_{tC.20}$	130	---	*	---	*	---	*	*	*	*	*
8	---	$Pt_{0.40}$	*	*	*	*	*	*	*	*	*	*	*
	FAN	$P_{tF.40}$	*	*	*	*	*	*	*	*	*	*	*
	CC	$P_{tC.20}$	132	142	*	*	*	*	*	*	*	*	*
9	---	$Pt_{0.40}$	*	*	*	*	*	*	*	*	*	*	*
	FAN	$P_{tF.40}$	60	3	*	*	*	*	*	*	*	*	*
	CC	$P_{tC.20}$	183	144	114	*	*	*	*	*	*	*	*
10	---	$Pt_{0.40}$	*	*	*	*	*	*	*	*	*	*	*
	FAN	$P_{tF.40}$	62	82	*	*	*	*	*	*	*	*	*
	CC	$P_{tC.20}$	177	200	123	124	*	*	*	*	*	*	*
11,2	---	$Pt_{0.40}$	15	*	*	*	*	*	*	*	*	*	*
	FAN	$P_{tF.40}$	84	84	73	6	*	*	*	*	*	*	*
	CC	$P_{tC.20}$	190	193	190	144	*	*	*	*	*	*	*
12,5	---	$Pt_{0.40}$	18	33	*	*	*	*	*	*	*	*	*
	FAN	$P_{tF.40}$	78	89	78	97	*	*	*	*	*	*	*
	CC	$P_{tC.20}$	178	193	189	190	*	5	*	*	*	*	*
14	---	$Pt_{0.40}$	45	36	25	*	*	*	*	*	*	*	*
	FAN	$P_{tF.40}$	70	81	102	111	50	*	*	*	*	*	*
	CC	$P_{tC.20}$	165	178	200	213	142	32	186	136	*	*	*
16	---	$Pt_{0.40}$	45	62	30	49	*	*	*	*	*	*	*
	FAN	$P_{tF.40}$	66	75	96	91	59	103	*	*	*	*	*
	CC	$P_{tC.20}$	156	168	190	170	143	176	192	153	*	*	*
18	---	$Pt_{0.40}$	61	61	71	58	5	*	*	*	*	*	*
	FAN	$P_{tF.40}$	59	69	80	99	143	108	*	*	*	*	*
	CC	$P_{tC.20}$	143	156	164	185	212	175	321	379	378	*	*
20	---	$Pt_{0.40}$	59	77	71	84	13	51	*	*	*	*	*
	FAN	$P_{tF.40}$	56	64	77	75	131	140	*	*	*	*	*
	CC	$P_{tC.20}$	135	146	158	144	196	198	312	365	379	*	*
22,4	---	$Pt_{0.40}$	69	73	90	94	86	55	*	*	*	*	*
	FAN	$P_{tF.40}$	52	60	67	82	105	129	*	*	*	*	*
	CC	$P_{tC.20}$	126	136	140	157	162	183	104	43	*	425	*
25	---	$Pt_{0.40}$	67	84	89	99	84	118	*	*	*	*	*
	FAN	$P_{tF.40}$	49	57	65	64	98	110	*	*	*	*	*
	CC	$P_{tC.20}$	120	129	135	123	152	158	159	153	22	429	*
28	---	$Pt_{0.40}$	38	80	33	109	16	114	*	*	*	*	*
	FAN	$P_{tF.40}$	43	53	56	70	99	103	*	*	*	*	*
	CC	$P_{tC.20}$	103	121	115	134	148	148	155	149	33	*0	*
31.5	---	$Pt_{0.40}$	37	50	33	46	18	49	*	*	*	*	*
	FAN	$P_{tF.40}$	41	46	54	53	93	97	55	*	*	*	*
	CC	$P_{tC.20}$	99	105	111	102	139	138	296	382	431	64	*
35.5	---	$Pt_{0.40}$	39	48	40	50	41	49	*	*	*	*	*
	FAN	$P_{tF.40}$	39	44	49	57	81	92	55	*	*	*	*
	CC	$P_{tC.20}$	94	99	102	109	123	130	285	363	418	73	*
40	---	$Pt_{0.40}$	38	50	39	50	40	68	*	*	*	*	*
	FAN	$P_{tF.40}$	37	42	48	48	77	83	77	43	*	*	*
	CC	$P_{tC.20}$	90	95	99	92	117	118	286	374	435	465	*
45	---	$Pt_{0.40}$	39	48	43	54	50	65	*	*	*	*	*
	FAN	$P_{tF.40}$	35	40	47	51	72	78	75	43	*	*	*
	CC	$P_{tC.20}$	86	90	97	98	111	112	275	355	420	456	*

*** Additional Cooling Necessary - Consult Factory**

Nom. Ratio	Cooling Type		SK 5207/ SK 5307	SK 6207/ SK 6307	SK 7207/ SK 7307	SK 8207/ SK 8307	SK 9207/ SK 9307	SK 10207/ SK 10307	SK 11207/ SK 11307	SK 12207/ SK 12307	SK 13207/ SK 13307	SK 14207/ SK 14307	SK 15207/ SK 15307
			Thermal Power										
i_N			P_N [kW]	P_N [kW]	P_N [kW]	P_N [kW]	P_N [kW]	P_N [kW]	P_N [kW]	P_N [kW]	P_N [kW]	P_N [kW]	P_N [kW]
50	---	$Pt_{0.40}$	37	49	42	52	48	74	60	44	1	*	*
	FAN	$P_{tF.40}$	34	38	45	45	68	74	84	117	164	29	61
	CC	$P_{tC.20}$	82	87	94	87	105	107	257	382	539	465	502
56	---	$Pt_{0.40}$	52	46	68	56	103	71	59	43	5	*	*
	FAN	$P_{tF.40}$	33	36	41	48	63	71	80	110	157	32	64
	CC	$P_{tC.20}$	80	82	87	93	98	101	246	361	516	454	483
63	---	$Pt_{0.40}$	50	62	66	74	98	124	64	55	33	67	*
	FAN	$P_{tF.40}$	31	36	40	40	59	66	74	102	136	162	113
	CC	$P_{tC.20}$	77	82	84	78	93	96	230	339	469	503	497
71	---	$Pt_{0.40}$	48	59	64	79	96	118	62	53	34	67	*
	FAN	$P_{tF.40}$	30	34	37	43	55	63	71	97	131	157	110
	CC	$P_{tC.20}$	74	77	79	84	87	91	221	322	451	489	477
80	---	$Pt_{0.40}$	47	57	62	69	92	115	90	104	120	84	129
	FAN	$P_{tF.40}$	29	33	36	36	53	59	60	80	101	140	151
	CC	$P_{tC.20}$	70	75	76	71	83	85	192	278	379	443	445
90	---	$Pt_{0.40}$	45	54	63	74	91	109	86	99	116	83	125
	FAN	$P_{tF.40}$	27	31	36	39	51	56	58	76	97	136	144
	CC	$P_{tC.20}$	67	71	76	76	79	81	185	265	365	431	427
100	---	$Pt_{0.40}$	43	53	61	67	87	108	85	99	116	157	134
	FAN	$P_{tF.40}$	26	30	35	35	48	54	55	72	91	110	137
	CC	$P_{tC.20}$	65	69	73	68	76	78	174	253	342	364	407
112	---	$Pt_{0.40}$	45	50	61	72	93	103	81	95	112	154	130
	FAN	$P_{tF.40}$	25	28	31	37	46	51	53	69	88	107	131
	CC	$P_{tC.20}$	61	65	65	73	71	74	168	241	331	356	390
125	---	$Pt_{0.40}$	43	52	59	65	91	107	---	---	---	149	---
	FAN	$P_{tF.40}$	24	27	30	30	44	48	---	---	---	99	---
	CC	$P_{tC.20}$	58	62	63	59	69	70	---	---	---	329	---
140	---	$Pt_{0.40}$	41	49	59	69	87	105	---	---	---	146	---
	FAN	$P_{tF.40}$	23	25	30	32	42	47	---	---	---	97	---
	CC	$P_{tC.20}$	56	59	63	63	66	68	---	---	---	321	---
160	---	$Pt_{0.40}$	40	48	57	62	86	100	---	---	---	---	---
	FAN	$P_{tF.40}$	22	25	29	29	40	45	---	---	---	---	---
	CC	$P_{tC.20}$	54	57	61	56	62	65	---	---	---	---	---
180	---	$Pt_{0.40}$	33	46	48	67	82	99	---	---	---	---	---
	FAN	$P_{tF.40}$	17	23	23	31	38	42	---	---	---	---	---
	CC	$P_{tC.20}$	42	54	48	61	59	61	---	---	---	---	---
200	---	$Pt_{0.40}$	32	38	47	51	71	95	---	---	---	---	---
	FAN	$P_{tF.40}$	16	18	22	22	30	40	---	---	---	---	---
	CC	$P_{tC.20}$	41	43	47	44	48	58	---	---	---	---	---
224	---	$Pt_{0.40}$	31	37	45	54	69	81	---	---	---	---	---
	FAN	$P_{tF.40}$	16	18	21	24	29	32	---	---	---	---	---
	CC	$P_{tC.20}$	40	41	44	47	46	47	---	---	---	---	---
250	---	$Pt_{0.40}$	30	36	44	47	66	78	---	---	---	---	---
	FAN	$P_{tF.40}$	15	17	20	21	28	31	---	---	---	---	---
	CC	$P_{tC.20}$	38	40	43	41	44	45	---	---	---	---	---
280	---	$Pt_{0.40}$	29	34	43	50	63	75	---	---	---	---	---
	FAN	$P_{tF.40}$	15	17	20	22	27	30	---	---	---	---	---
	CC	$P_{tC.20}$	37	38	43	43	42	43	---	---	---	---	---
315	---	$Pt_{0.40}$	29	34	42	46	62	72	---	---	---	---	---
	FAN	$P_{tF.40}$	14	16	20	20	26	29	---	---	---	---	---
	CC	$P_{tC.20}$	36	38	42	39	41	42	---	---	---	---	---
355	---	$Pt_{0.40}$	---	32	---	49	60	71	---	---	---	---	---
	FAN	$P_{tF.40}$	---	15	---	21	25	28	---	---	---	---	---
	CC	$P_{tC.20}$	---	36	---	42	40	41	---	---	---	---	---
400	---	$Pt_{0.40}$	---	---	---	---	---	68	---	---	---	---	---
	FAN	$P_{tF.40}$	---	---	---	---	---	27	---	---	---	---	---
	CC	$P_{tC.20}$	---	---	---	---	---	39	---	---	---	---	---
450	---	$Pt_{0.40}$	---	---	---	---	---	---	---	---	---	---	---
	FAN	$P_{tF.40}$	---	---	---	---	---	---	---	---	---	---	---
	CC	$P_{tC.20}$	---	---	---	---	---	---	---	---	---	---	---

Notes

DRIVESYSTEMS

Parallel Dimensions

Housing Dimensional Overview 132
Shaft Size Dimension Overview 133
SK 5207 / 5307 134
SK 6207 / 6307 140
SK 7207 / 7307 138
SK 8207 / 8307 140
SK 9207 / 9307 142
SK 10207 / 10307 144
SK 11207 / 11307 146
SK 12207 / 12307 148
SK 13207 / 13307 150
SK 14207 / 14307 152
SK 15207 / 15307 154
Optional Shaft 156
Accessory Option 159

Overview Dimensions

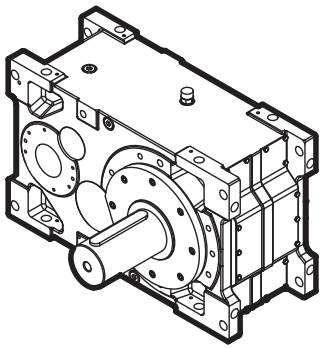

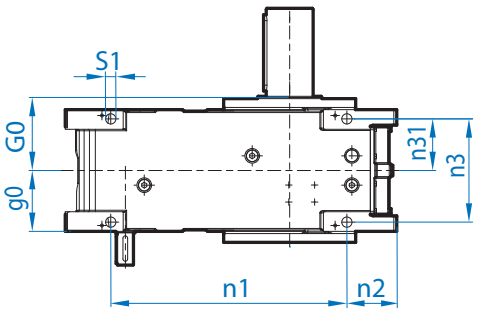

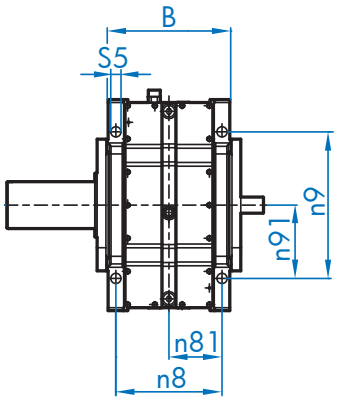

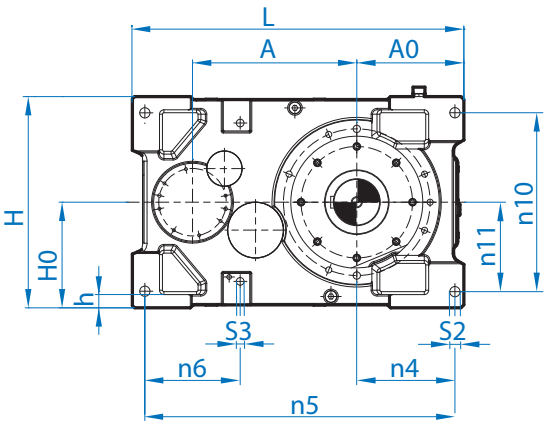

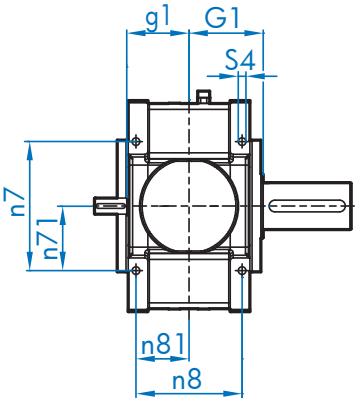

	OVERALL DIMENSIONS											MOUNTING HOLE DIM.			
	A	A0	B	g0	G0	g1	G1	h	H	H0	L	ø S1/S2	S4/S5	S3	⇨🕮
SK 5.07	377	230	345	172,5	172,5	182,5	192,5	30	455	227,5	730	28	M24 x 40	M24 x 36	134
SK 6.07	407	255	345	172,5	172,5	182,5	192,5	30	495	247,5	780	28	M24 x 40	M24 x 36	136
SK 7.07	440	295	350	175	189	179	197 (215)*	35	530	265	870	28	M24 x 30	M24	138
SK 8.07	465	325	350	175	189	179	197 (215)*	35	590	295	925	28	M24 x 30	M24	140
SK 9.07	530	330	415	207,5	248	212,5	253	45	650	325	1055	35	M30 x 45	M30	142
SK 10.07	560	365	415	207,5	248	212,5	253	45	720	360	1130	35	M30 x 45	M30	144
SK 11.07	630	370	440	254	270	260	280	52	750	375	1210	42	M36 x 58	M36	146
SK 12.07	695	405	510	288,5	305	294	315	57	850	425	1345	48	M42 x 65	M42	148
SK 13.07	780	475	550	323	343	328	353	60	950	475	1530	55	M48 x 75	M48	150
SK 14.07	835	505	610	325	373	355	383	55	1050	525	1615	55	M48 x 75	M48	152
SK 15.07	935	545	650	361	385	371	395	70	1100	550	1800	65	M56 x 90	M56	154

	CENTER DISTANCE DIMENSIONS															
	n1	n2	n3	n31	n4	n5	n6	n7	n71	n8	n81	n9	n91	n10	n11	⇨🕮
SK 5.07	490	125	295	147,5	205	680	196	320	160	295	147,5	320	160	400	200	134
SK 6.07	530	130	295	147,5	230	730	196	320	160	295	147,5	320	160	400	200	136
SK 7.07	590	160	305	152,5	270	820	220	380	190	300	150	380	190	460	230	138
SK 8.07	645	160	305	152,5	300	875	220	440	220	300	150	380	190	540	270	140
SK 9.07	730	175	352	176	302,5	995	325	440	220	362	181	440	220	540	270	142
SK 10.07	805	170	352	176	335	1057	325	500	250	362	181	440	220	640	320	144
SK 11.07	850	217,5	370	185	330	1130	340	520	260	385	192,5	520	260	670	335	146
SK 12.07	930	257,5	430	215	365	1265	410	600	300	440	220	600	300	770	385	148
SK 13.07	1050	290	465	232,5	425	1430	450	700	350	475	237,5	700	350	850	425	150
SK 14.07	1100	295	525	262,5	455	1515	150	780	390	535	267,5	700	350	950	475	152
SK 15.07	1230	345	550	275	490	1690	530	800	400	560	280	800	400	990	495	154

* values in brakets at option "DRY"

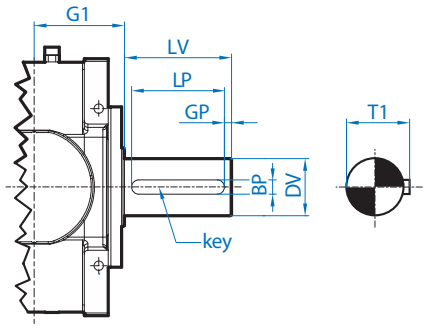

Solid Output Shaft

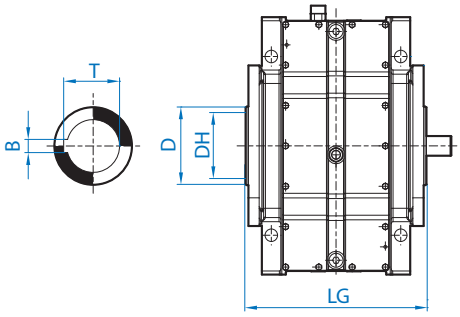

Hollow Shaft

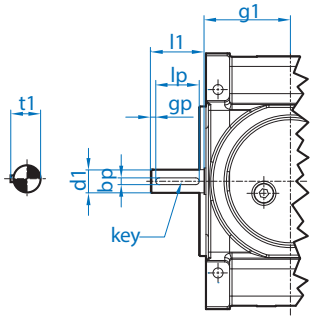

Solid Input Shaft

	SOLID OUTPUT SHAFT							HOLLOW SHAFT					
	ø DV	LV	LP	BP	GP	T1	Chaveta	ø D	ø DH H7	LG	B	T	⇨🕮
SK 5.07	120	210	180	32	15	127	32 x 18 x180	140	105	385	28	111,4	134
SK 6.07	120	210	180	32	15	127	32 x 18 x 180	140	105	385	28	111,4	136
SK 7.07	140	250	200	36	25	148	36 x 20 x 200	160	125	394	32	132,4	138
SK 8.07	140	250	200	36	25	148	36 x 20 x 200	160	125	394	32	132,4	140
SK 9.07	160	300	260	40	20	169	40 x 20 x 260	220	160 (145)*	506	40	169,4	142
SK 10.07	160	300	260	40	20	169	40 x 20 x 260	220	160 (145)*	506	40	169,4	144
SK 11.07	170	300	260	40	20	179	40 x 22 x 260	240	170	560	40	179,4	146
SK 12.07	200	350	300	45	25	210	45 x 25 x 300	250	190	630	45	200,4	148
SK 13.07	230	410	350	50	31	241	50 x 28 x 350	285	230	706	50	241,4	150
SK 14.07	250	410	360	56	25	262	56 x 32 x 360	285	230	766	50	241,4	152
SK 15.07	250	410	360	56	25	262	56 x 32 x 360	320	250	790	56	262,4	154

	SK..207 SOLID INPUT SHAFT							
	i_N	ø d1	l1	lp	bp	gp	t1	key
SK 5.07	**7,1-25**	48	110	100	14	5	51,5	14 x 9 x 100
SK 6.07	**8,0-28**	48	110	100	14	5	51,5	14 x 9 x 100
SK 7.07	**7,1-25**	48	110	100	14	5	51,5	14 x 9 x 100
SK 8.07	**8,0-28**	48	110	100	14	5	51,5	14 x 9 x 100
SK 9.07	**7,1-25**	55	110	90	16	10	59,0	16 x 10 x 90
SK 10.07	**8,0-28**	55	110	90	16	10	59,0	16 x 10 x 90
SK 11.07	**5,6-20**	80	170	140	22	15	85,0	22 x 14 x 140
SK 12.07	**5,6-20**	100	210	180	28	15	106,0	28 x 16 x 180
SK 13.07	**5,6-20**	110	210	180	28	15	116,0	28 x 16 x 180
SK 14.07	**7,1-25**	110	210	180	28	15	116,0	28 x 16 x 180
SK 15.07	**5,6-20**	120	245	200	32	15	127,0	32 x 18 x 200

	SK..307 SOLID INPUT SHAFT								
	i_N	ø d1	l1	lp	bp	gp	t1	key	⇨🕮
SK 5.07	**28,0-315**	48	110	100	14	5	51,5	14 x 9 x 100	134
SK 6.07	**31,5-355**	48	110	100	14	5	51,5	14 x 9 x 100	136
SK 7.07	**28,0-315**	48	110	100	14	5	51,5	14 x 9 x 100	138
SK 8.07	**31,5-355**	48	110	100	14	5	51,5	14 x 9 x 100	140
SK 9.07	**28,0-355**	55	110	90	16	10	59,0	16 x 10 x 90	142
SK 10.07	**28,0-400**	55	110	90	16	10	59,0	16 x 10 x 90	144
SK 11.07	**22,4-112**	70	140	125	20	7,5	74,5	20 x 12 x 125	146
SK 12.07	**22,4-112**	80	170	140	22	15	85,0	22 x 14 x 140	148
SK 13.07	**22,4-112**	80	170	140	22	15	85,0	22 x 14 x 140	150
SK 14.07	**28,0-140**	80	170	140	22	15	85,0	22 x 14 x 140	152
SK 15.07	**22,4-45**	100	210	180	28	15	106,0	28 x 16 x 180	154
	50,0-112	80	170	140	22	15	85,0	22 x 14 x 140	154

* values in brakets at option "DRY"

SK 5207 / 5307 V *

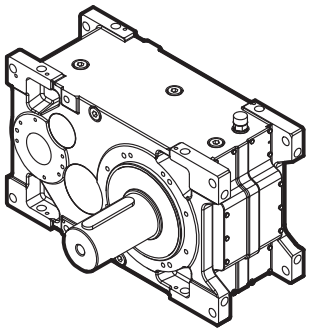

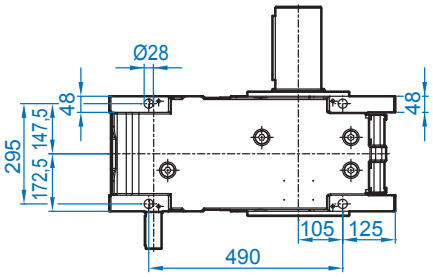

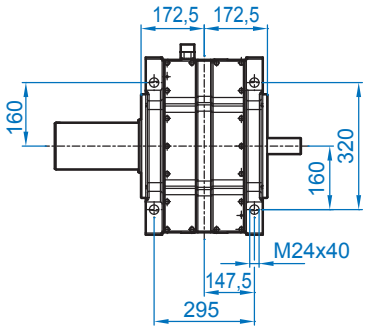

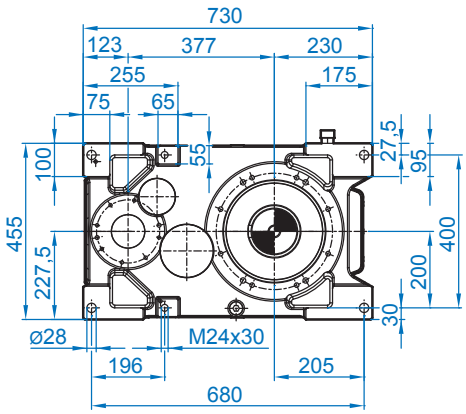

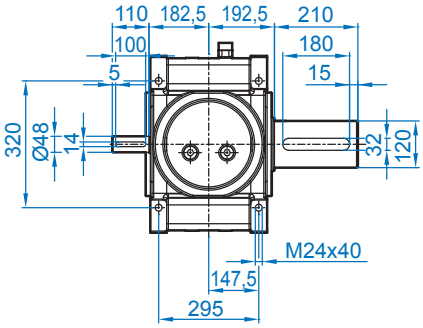

SK 5207 / 5307 A *

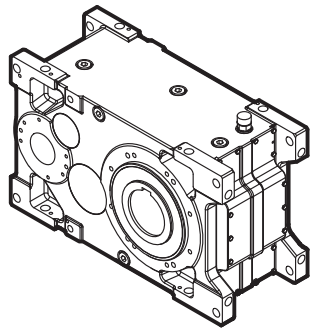

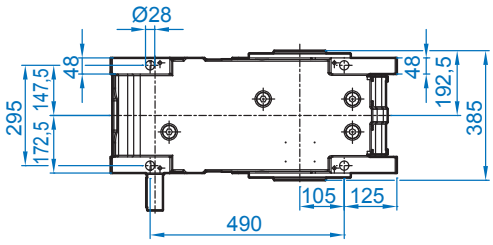

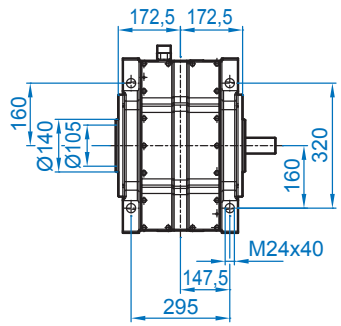

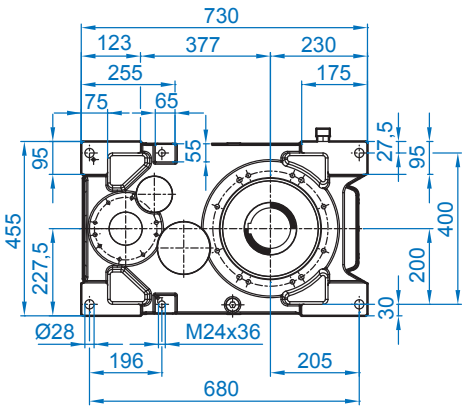

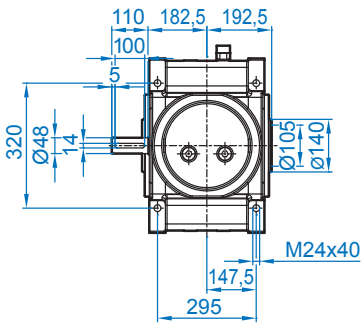

* Dimensions for option "DRY" please see 📖 132-133

SK 5207 / SK 5307

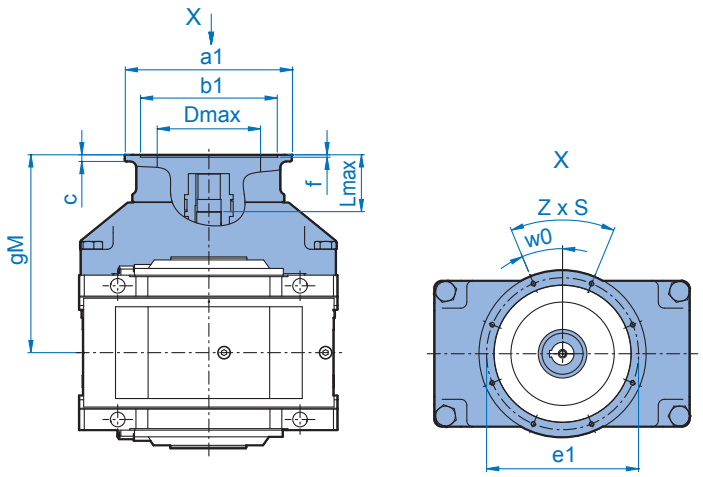

			gM	ø a1	ø b1	ø e1	c	f	z x s	w0°	ø yDmax	Lmax
SK 5207	IEC [1]	100	381,5	250	180	215	11	4	4 x 14,5	0	160	89
		112	381,5	250	180	215	11	4	4 x 14,5	0	160	89
		132	406,5	300	230	265	12	4	4 x 14,5	0	210	114
		160	436,5	350	250	300	15	6,5	4 x 17,5	45	220	144
		180	436,5	350	250	300	15	6,5	4 x 17,5	45	220	144
		200	436,5	400	300	350	17	6,5	4 x 17,5	45	250	144
		225	466,5	450	350	400	18	6,5	8 x 17,5	22,5	250	174
		250	466,5	550	450	500	22	8	8 x M16	22,5	250	174
		280	466,5	550	450	500	22	8	8 x M16	22,5	250	174
SK 5307	IEC [1]	100	381,5	250	180	215	11	4	4 x 14,5	0	160	89
		112	381,5	250	180	215	11	4	4 x 14,5	0	160	89
		132	406,5	300	230	265	12	4	4 x 14,5	0	210	114
		160	436,5	350	250	300	15	6,5	4 x 17,5	45	220	144
		180	436,5	350	250	300	15	6,5	4 x 17,5	45	220	144
		200	436,5	400	300	350	17	6,5	4 x 17,5	45	250	144
		225	466,5	450	350	400	18	6,5	8 x 17,5	22,5	250	174
		250	466,5	550	450	500	22	8	8 x M16	22,5	250	174
		280	466,5	550	450	500	22	8	8 x M16	22,5	250	174

[1] Type designation and dimensions up to 200kW correspond to NORD motors

			gM	ø a1	ø b1	ø e1	c	f	z x s	w0°	ø Dmax	Lmax
SK 5207	NEMA	254/256 TC	453,5	350	215,9	184,15	38	4	4 x 1/2-13	45	220	161
		284/286 TC	453,5	350	266,7	228,6	38	4	4 x 1/2-13	45	220	161
		324/326 TC	466,5	400	317,5	279,4	51	4	4 x 5/8-11	45	265	173
		364/365 TC	496,5	450	317,5	279,4	52	4	4 x 5/8-11	45	280	204
		404/405 TC	510,5	550	317,5	279,4	70	6	4 x 5/8-11	45	330	218
SK 5307	NEMA	254/256 TC	453,5	350	215,9	184,15	38	4	4 x 1/2-13	45	220	161
		284/286 TC	453,5	350	266,7	228,6	38	4	4 x 1/2-13	45	220	161
		324/326 TC	466,5	400	317,5	279,4	51	4	4 x 5/8-11	45	265	173
		364/365 TC	496,5	450	317,5	279,4	52	4	4 x 5/8-11	45	280	204
		404/405 TC	510,5	550	317,5	279,4	70	6	4 x 5/8-11	45	330	218

SK 6207 / 6307 V *

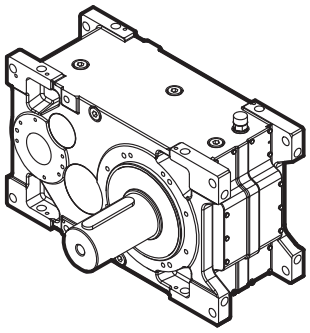

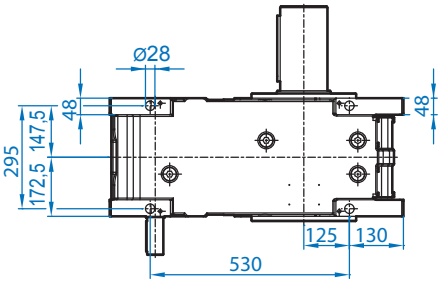

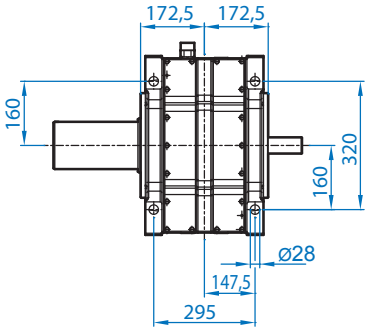

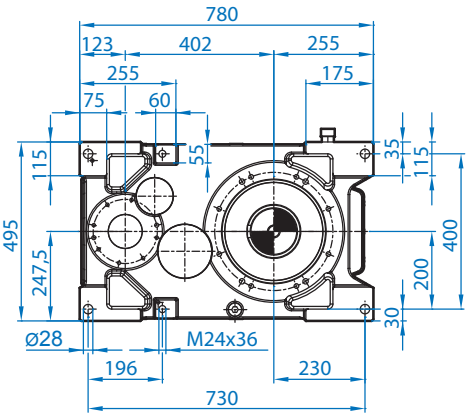

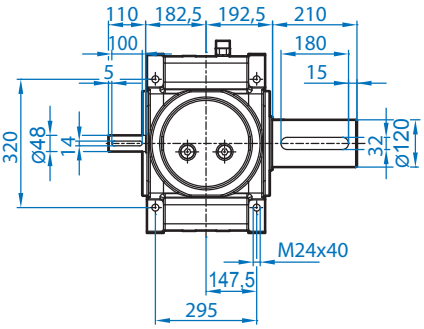

SK 6207 / 6307 A *

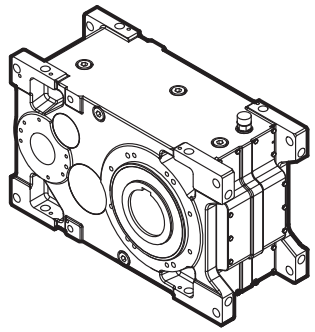

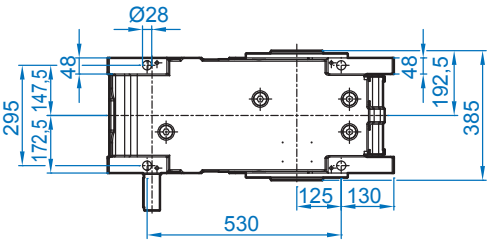

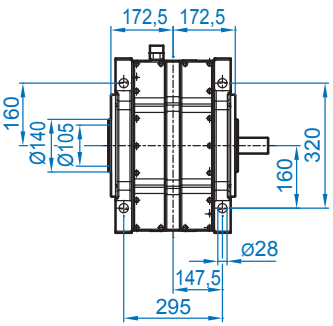

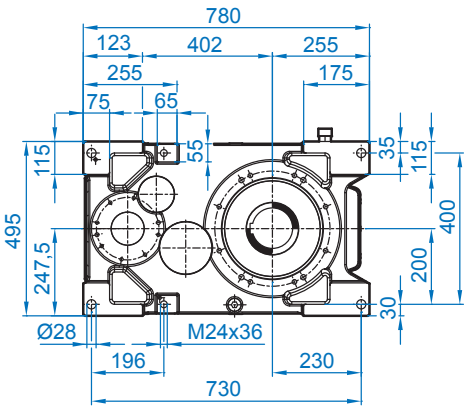

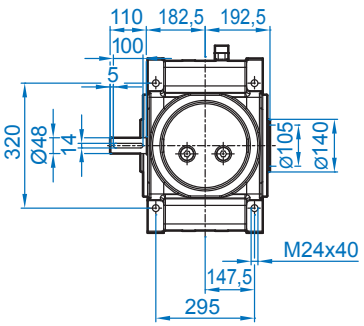

* Dimensions for option "DRY" please see 📖 132-133

SK 6207 / SK 6307

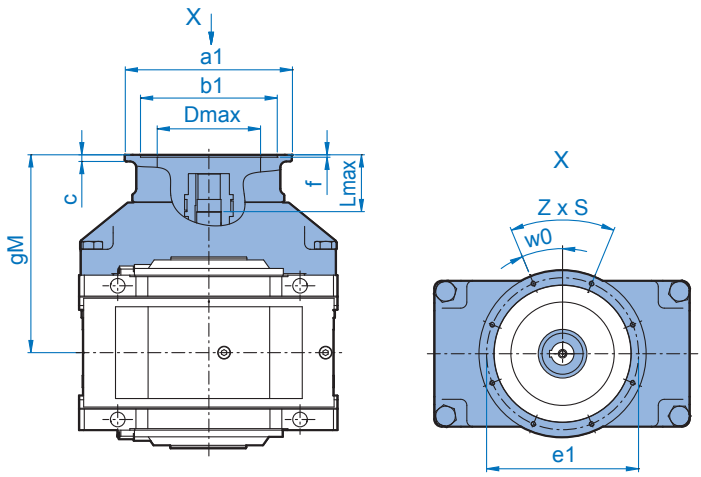

			gM	ø a1	ø b1	ø e1	c	f	z x s	w0°	ø Dmax	Lmax
SK 6207	IEC [1]	100	381,5	250	180	215	11	4	4 x 14,5	0	160	89
		112	381,5	250	180	215	11	4	4 x 14,5	0	160	89
		132	406,5	300	230	265	12	4	4 x 14,5	0	210	114
		160	436,5	350	250	300	15	6,5	4 x 17,5	45	220	144
		180	436,5	350	250	300	15	6,5	4 x 17,5	45	220	144
		200	436,5	400	300	350	17	6,5	4 x 17,5	45	250	144
		225	466,5	450	350	400	18	6,5	8 x 17,5	22,5	250	174
		250	466,5	550	450	500	22	8	8 x M16	22,5	250	174
		280	466,5	550	450	500	22	8	8 x M16	22,5	250	174
SK 6307	IEC [1]	100	381,5	250	180	215	11	4	4 x 14,5	0	160	89
		112	381,5	250	180	215	11	4	4 x 14,5	0	160	89
		132	406,5	300	230	265	12	4	4 x 14,5	0	210	114
		160	436,5	350	250	300	15	6,5	4 x 17,5	45	220	144
		180	436,5	350	250	300	15	6,5	4 x 17,5	45	220	144
		200	436,5	400	300	350	17	6,5	4 x 17,5	45	250	144
		225	466,5	450	350	400	18	6,5	8 x 17,5	22,5	250	174
		250	466,5	550	450	500	22	8	8 x M16	22,5	250	174
		280	466,5	550	450	500	22	8	8 x M16	22,5	250	174

[1] Type designation and dimensions up to 200kW correspond to NORD motors

			gM	ø a1	ø b1	ø e1	c	f	z x s	w0°	ø Dmax	Lmax
SK 6207	NEMA	254/256 TC	453,5	350	215,9	184,15	38	4	4 x 1/2-13	45	220	161
		284/286 TC	453,5	350	266,7	228,6	38	4	4 x 1/2-13	45	220	161
		324/326 TC	466,5	400	317,5	279,4	51	4	4 x 5/8-11	45	265	173
		364/365 TC	496,5	450	317,5	279,4	52	4	4 x 5/8-11	45	280	204
		404/405 TC	510,5	550	317,5	279,4	70	6	4 x 5/8-11	45	330	218
SK 6307	NEMA	254/256 TC	453,5	350	215,9	184,15	38	4	4 x 1/2-13	45	220	161
		284/286 TC	453,5	350	266,7	228,6	38	4	4 x 1/2-13	45	220	161
		324/326 TC	466,5	400	317,5	279,4	51	4	4 x 5/8-11	45	265	173
		364/365 TC	496,5	450	317,5	279,4	52	4	4 x 5/8-11	45	280	204
		404/405 TC	510,5	550	317,5	279,4	70	6	4 x 5/8-11	45	330	218

SK 7207 / 7307 V *

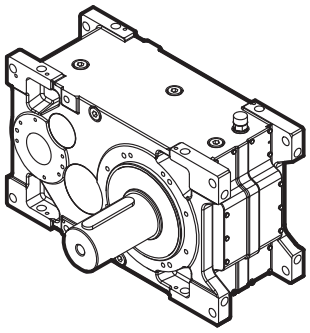

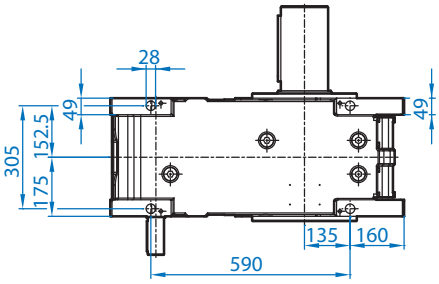

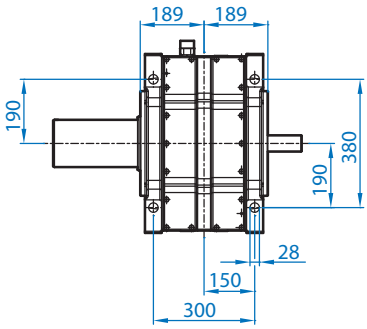

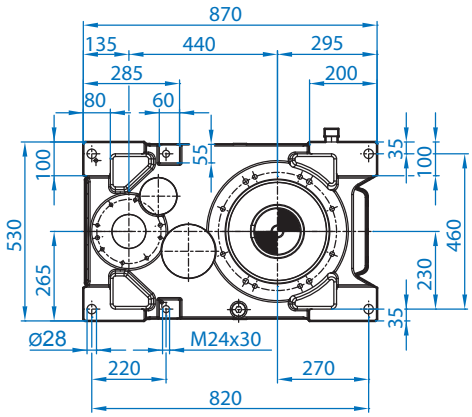

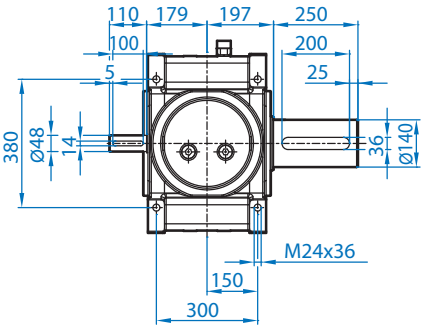

SK 7207 / 7307 A *

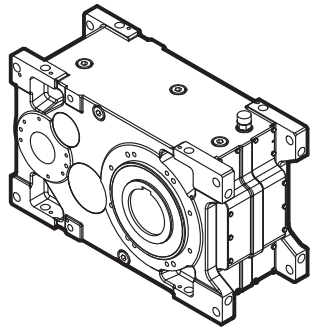

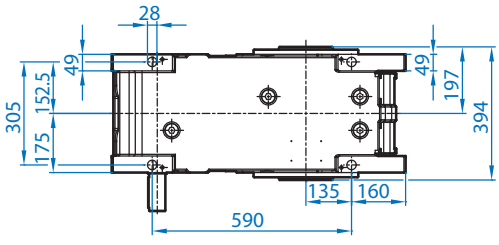

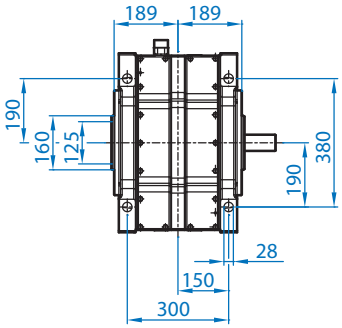

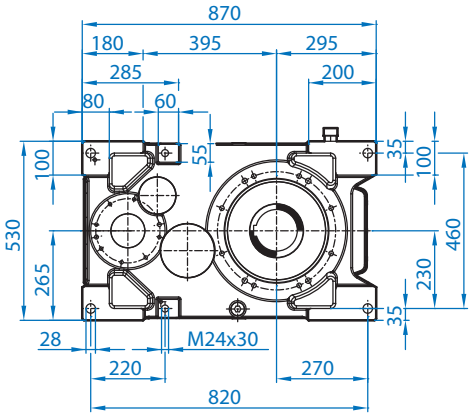

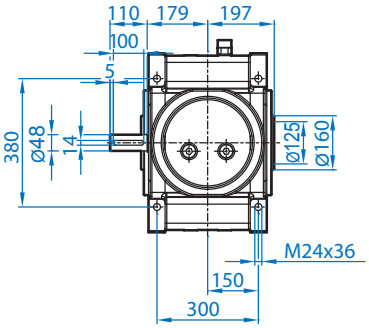

* Dimensions for option "DRY" please see 📖 132-133

SK 7207 / SK 7307

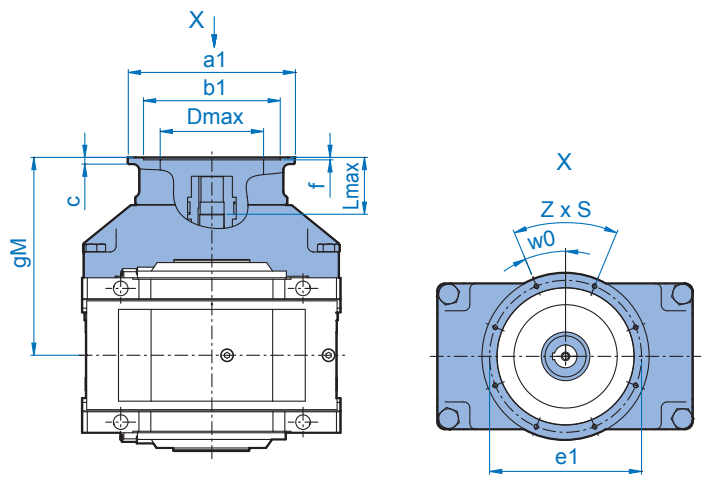

			gM	ø a1	ø b1	ø e1	c	f	z x s	w0°	ø Dmax	Lmax
SK 7207	IEC [1]	100	389	250	180	215	11	4	4 x 14,5	0	160	100
		112	389	250	180	215	11	4	4 x 14,5	0	160	100
		132	409	300	230	265	12	4	4 x 14,5	0	210	120
		160	439	350	250	300	15	6,5	4 x 17,5	45	220	150
		180	439	350	250	300	15	6,5	4 x 17,5	45	220	150
		200	439	400	300	350	17	6,5	4 x 17,5	45	250	150
		225	469	450	350	400	18	6,5	8 x 17,5	22,5	250	180
		250	469	550	450	500	22	8	8 x M16	22,5	250	180
		280	469	550	450	500	22	8	8 x M16	22,5	250	180
		315	499	660	550	600	22	8	8 x 22	22,5	250	210
	TN [2]	315	499	800	680	740	25	8	8 x 22	22,5	250	210
		355	499	900	780	840	25	8	8 x 22	22,5	250	210
SK 7307	IEC [1]	100	389	250	180	215	11	4	4 x 14,5	0	160	100
		112	389	250	180	215	11	4	4 x 14,5	0	160	100
		132	409	300	230	265	12	4	4 x 14,5	0	210	120
		160	439	350	250	300	15	6,5	4 x 17,5	45	220	150
		180	439	350	250	300	15	6,5	4 x 17,5	45	220	150
		200	439	400	300	350	17	6,5	4 x 17,5	45	250	150
		225	469	450	350	400	18	6,5	8 x 17,5	22,5	250	180
		250	469	550	450	500	22	8	8 x M16	22,5	250	180
		280	469	550	450	500	22	8	8 x M16	22,5	250	180
		315	499	660	550	600	22	8	8 x 22	22,5	250	210
	TN [2]	315	499	800	680	740	25	8	8 x 22	22,5	250	210
		355	499	900	780	840	25	8	8 x 22	22,5	250	210

[1] Type designation and dimensions up to 200kW correspond to NORD motors [2] Data for Transnorm motors available on request

			gM	ø a1	ø b1	ø e1	c	f	z x s	w0°	ø Dmax	Lmax
SK 7207	NEMA	254/256 TC	439	350	215,9	184,15	38	4	4 x 1/2-13	45	220	173
		284/286 TC	439	350	266,7	228,6	38	4	4 x 1/2-13	45	220	173
		324/326 TC	439	400	317,5	279,4	51	4	4 x 5/8-11	45	265	184
		364/365 TC	469	450	317,5	279,4	52	4	4 x 5/8-11	45	280	214
		404/405 TC	469	550	317,5	279,4	70	6	4 x 5/8-11	45	330	228
		444/445 TC	469	550	406,4	355,6	102	6	4 x 5/8-11	45	330	260
		447/449 TC	499	660	406,4	355,6	67	6	4 x 5/8-11	45	330	255
SK 7307	NEMA	254/256 TC	439	350	215,9	184,15	38	4	4 x 1/2-13	45	220	173
		284/286 TC	439	350	266,7	228,6	38	4	4 x 1/2-13	45	220	173
		324/326 TC	439	400	317,5	279,4	51	4	4 x 5/8-11	45	265	184
		364/365 TC	469	450	317,5	279,4	52	4	4 x 5/8-11	45	280	214
		404/405 TC	469	550	317,5	279,4	70	6	4 x 5/8-11	45	330	228
		444/445 TC	469	550	406,4	355,6	102	6	4 x 5/8-11	45	330	260
		447/449 TC	499	660	406,4	355,6	67	6	4 x 5/8-11	45	330	255

SK 8207 / 8307 V *

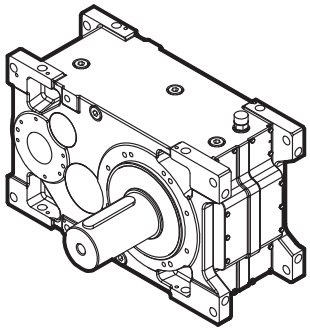

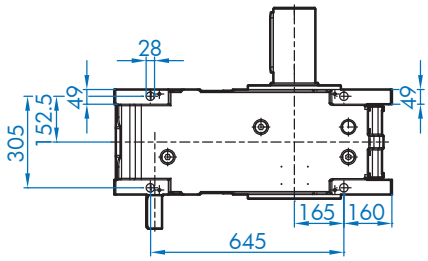

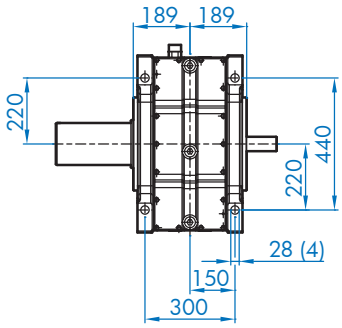

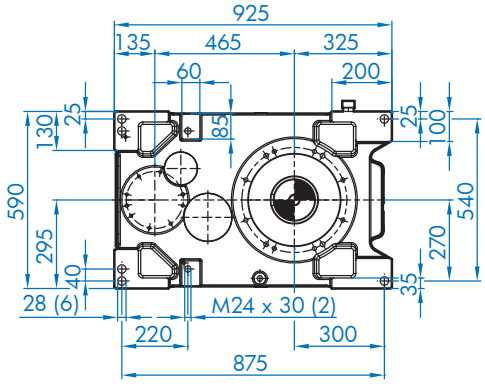

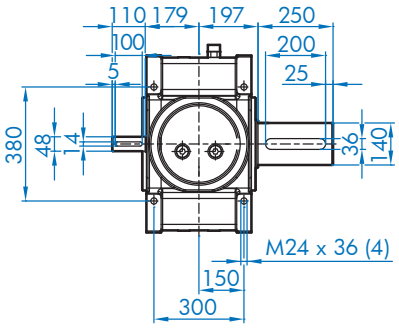

SK 8207 / 8307 A *

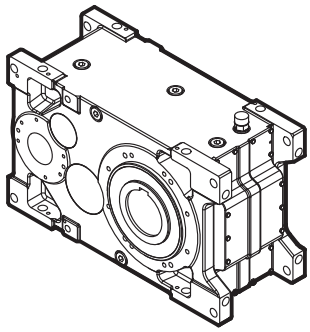

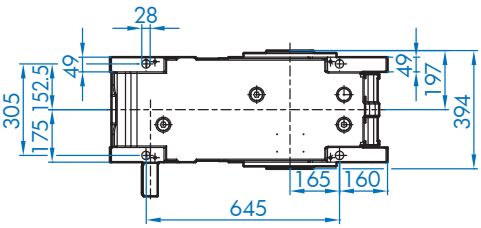

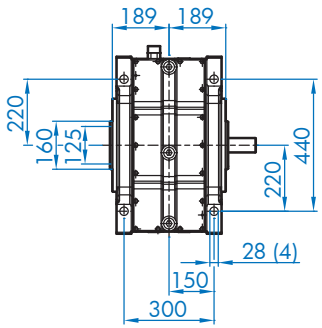

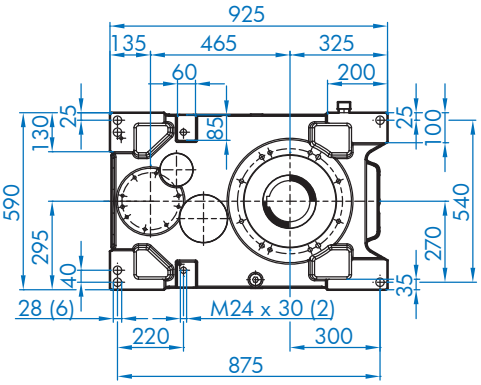

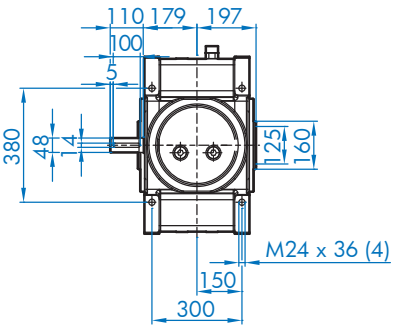

* Dimensions for option "DRY" please see 📖 132-133

SK 8207 / SK 8307

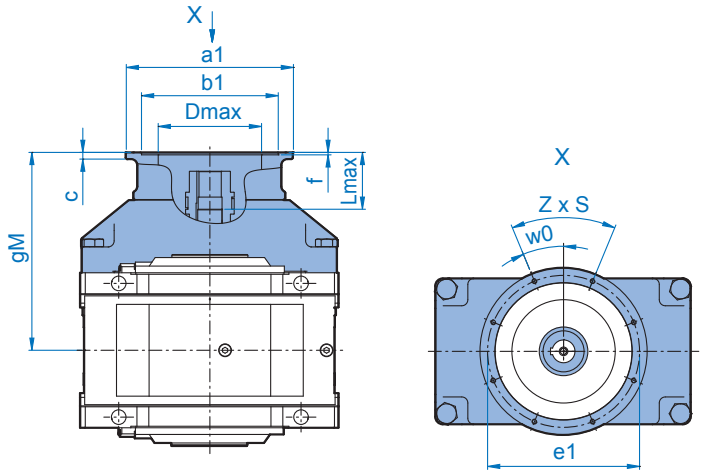

			gM	ø a1	ø b1	ø e1	c	f	z x s	w0°	ø Dmax	Lmax
SK 8207	IEC [1]	100	389	250	180	215	11	4	4 x 14.5	0	160	100
		112	389	250	180	215	11	4	4 x 14.5	0	160	100
		132	409	300	230	265	12	4	4 x 14.5	0	210	120
		160	439	350	250	300	15	6,5	4 x 17.5	45	220	150
		180	439	350	250	300	15	6,5	4 x 17.5	45	220	150
		200	439	400	300	350	17	6,5	4 x 17.5	45	250	150
		225	469	450	350	400	18	6,5	8 x 17.5	22,5	250	180
		250	469	550	450	500	22	8	8 x M16	22,5	250	180
		280	469	550	450	500	22	8	8 x M16	22,5	250	180
		315	499	660	550	600	22	8	8 x 22	22,5	250	210
	TN [2]	315	499	800	680	740	25	8	8 x 22	22,5	250	210
		355	499	900	780	840	25	8	8 x 22	22,5	250	210
SK 8307	IEC [1]	100	389	250	180	215	11	4	4 x 14.5	0	160	100
		112	389	250	180	215	11	4	4 x 14.5	0	160	100
		132	409	300	230	265	12	4	4 x 14.5	0	210	120
		160	439	350	250	300	15	6,5	4 x 17.5	45	220	150
		180	439	350	250	300	15	6,5	4 x 17.5	45	220	150
		200	439	400	300	350	17	6,5	4 x 17.5	45	250	150
		225	469	450	350	400	18	6,5	8 x 17.5	22,5	250	180
		250	469	550	450	500	22	8	8 x M16	22,5	250	180
		280	469	550	450	500	22	8	8 x M16	22,5	250	180
		315	499	660	550	600	22	8	8 x 22	22,5	250	210
	TN [2]	315	499	800	680	740	25	8	8 x 22	22,5	250	210
		355	499	900	780	840	25	8	8 x 22	22,5	250	210

[1] Type designation and dimensions up to 200kW correspond to NORD motors [2] Data for Transnorm motors available on request

			gM	ø a1	ø b1	ø e1	c	f	z x s	w0°	ø Dmax	Lmax
SK 8207	NEMA	254/256 TC	439	350	215,9	184,15	38	4	4 x 1/2-13	45	220	173
		284/286 TC	439	350	266,7	228,6	38	4	4 x 1/2-13	45	220	173
		324/326 TC	439	400	317,5	279,4	51	4	4 x 5/8-11	45	265	184
		364/365 TC	469	450	317,5	279,4	52	4	4 x 5/8-11	45	280	214
		404/405 TC	469	550	317,5	279,4	70	6	4 x 5/8-11	45	330	228
		444/445 TC	469	550	406,4	355,6	102	6	4 x 5/8-11	45	330	260
		447/449 TC	499	660	406,4	355,6	67	6	4 x 5/8-11	45	330	255
SK 8307	NEMA	254/256 TC	439	350	215,9	184,15	38	4	4 x 1/2-13	45	220	173
		284/286 TC	439	350	266,7	228,6	38	4	4 x 1/2-13	45	220	173
		324/326 TC	439	400	317,5	279,4	51	4	4 x 5/8-11	45	265	184
		364/365 TC	469	450	317,5	279,4	52	4	4 x 5/8-11	45	280	214
		404/405 TC	469	550	317,5	279,4	70	6	4 x 5/8-11	45	330	228
		444/445 TC	469	550	406,4	355,6	102	6	4 x 5/8-11	45	330	260
		447/449 TC	499	660	406,4	355,6	67	6	4 x 5/8-11	45	330	255

SK 9207 / 9307 V

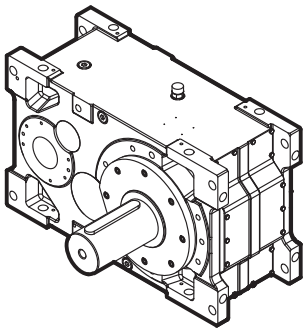

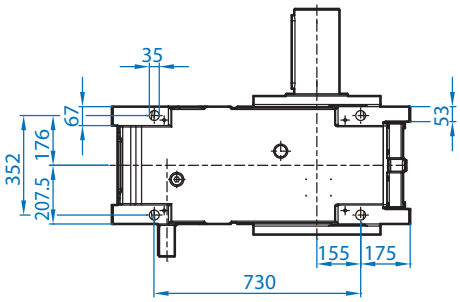

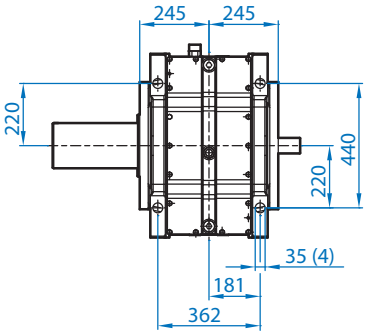

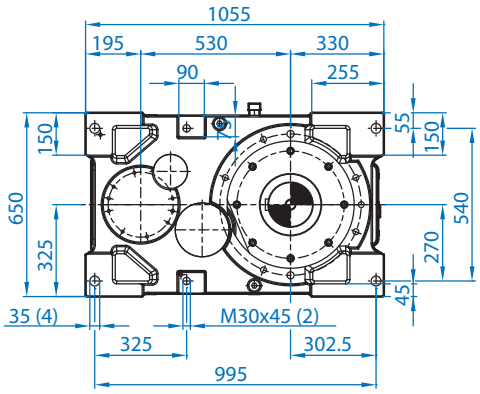

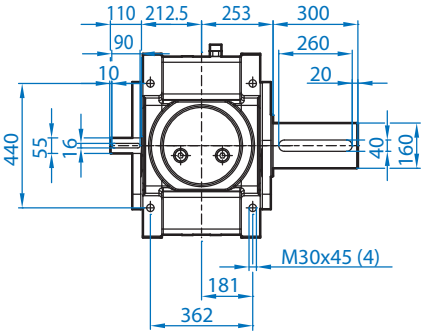

SK 9207 / 9307 A *

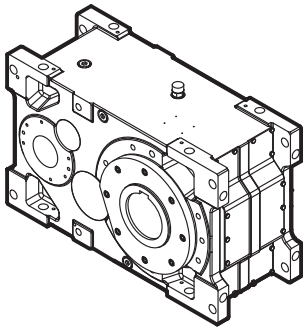

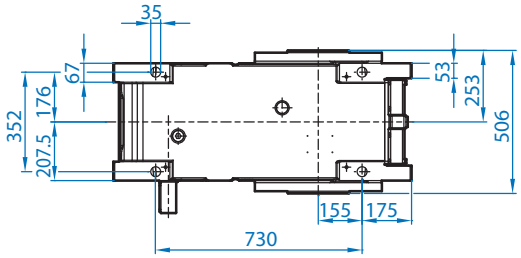

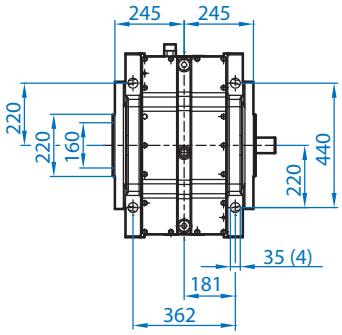

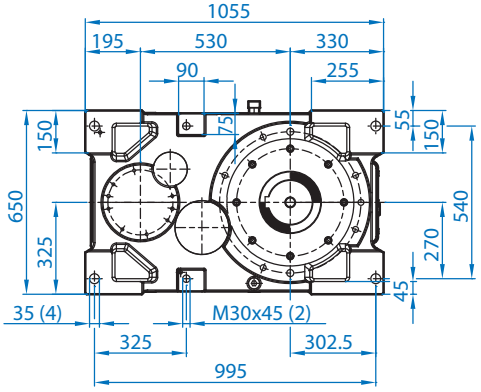

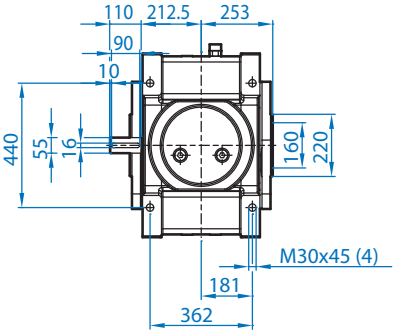

* Dimensions for option "DRY" please see 📖 132-133

SK 9207 / SK 9307

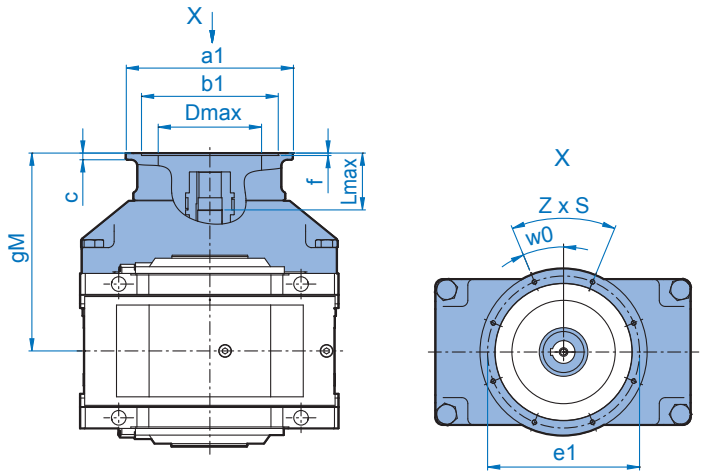

			gM	ø a1	ø b1	ø e1	c	f	z x s	w0°	ø Dmax	Lmax
SK 9207	IEC [1]	100	421,5	250	180	215	11	4	4 x 14.5	0	160	99
		112	421,5	250	180	215	11	4	4 x 14.5	0	160	99
		132	441,5	300	230	265	12	4	4 x 14.5	0	210	119
		160	471,5	350	250	300	15	6,5	4 x 17.5	45	220	149
		180	471,5	350	250	300	15	6,5	4 x 17.5	45	220	149
		200	471,5	400	300	350	17	6,5	4 x 17.5	45	250	149
		225	501,5	450	350	400	18	6,5	8 x 17.5	22,5	250	179
		250	501,5	550	450	500	22	8	8 x M16	22,5	250	179
		280	501,5	550	450	500	22	8	8 x M16	22,5	250	179
		315	531,5	660	550	600	22	8	8 x 22	22,5	250	209
	TN [2]	315	531,5	800	680	740	25	8	8 x 22	22,5	250	209
		355	531,5	900	780	840	25	8	8 x 22	22,5	250	209
SK 9307	IEC [1]	100	421,5	250	180	215	11	4	4 x 14.5	0	160	99
		112	421,5	250	180	215	11	4	4 x 14.5	0	160	99
		132	441,5	300	230	265	12	4	4 x 14.5	0	210	119
		160	471,5	350	250	300	15	6,5	4 x 17.5	45	220	149
		180	471,5	350	250	300	15	6,5	4 x 17.5	45	220	149
		200	471,5	400	300	350	17	6,5	4 x 17.5	45	250	149
		225	501,5	450	350	400	18	6,5	8 x 17.5	22,5	250	179
		250	501,5	550	450	500	22	8	8 x M16	22,5	250	179
		280	501,5	550	450	500	22	8	8 x M16	22,5	250	179
		315	531,5	660	550	600	22	8	8 x 22	22,5	250	209
	TN [2]	315	531,5	800	680	740	25	8	8 x 22	22,5	250	209
		355	531,5	900	780	840	25	8	8 x 22	22,5	250	209

[1] Type designation and dimensions up to 200kW correspond to NORD motors [2] Data for Transnorm motors available on request

			gM	ø a1	ø b1	ø e1	c	f	z x s	w0°	ø Dmax	Lmax
SK 9207	NEMA	254/256 TC	494,5	350	215,9	184,15	38	4	4 x 1/2-13	45	220	172
		284/286 TC	494,5	350	266,7	228,6	38	4	4 x 1/2-13	45	220	172
		324/326 TC	505,5	400	317,5	279,4	51	4	4 x 5/8-11	45	265	183
		364/365 TC	535,5	450	317,5	279,4	52	4	4 x 5/8-11	45	280	213
		404/405 TC	549,5	550	317,5	279,4	70	6	4 x 5/8-11	45	330	227
		444/445 TC	581,5	550	406,4	355,6	102	6	4 x 5/8-11	45	330	259
		447/449 TC	576,5	660	406,4	355,6	67	6	4 x 5/8-11	45	330	254
SK 9307	NEMA	254/256 TC	494,5	350	215,9	184,15	38	4	4 x 1/2-13	45	220	172
		284/286 TC	494,5	350	266,7	228,6	38	4	4 x 1/2-13	45	220	172
		324/326 TC	505,5	400	317,5	279,4	51	4	4 x 5/8-11	45	265	183
		364/365 TC	535,5	450	317,5	279,4	52	4	4 x 5/8-11	45	280	213
		404/405 TC	549,5	550	317,5	279,4	70	6	4 x 5/8-11	45	330	227
		444/445 TC	581,5	550	406,4	355,6	102	6	4 x 5/8-11	45	330	259
		447/449 TC	576,5	660	406,4	355,6	67	6	4 x 5/8-11	45	330	254

SK 10207 / 10307 V

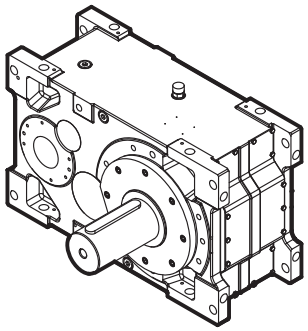

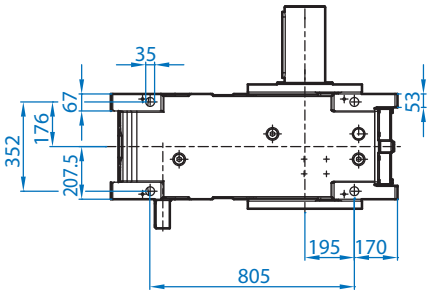

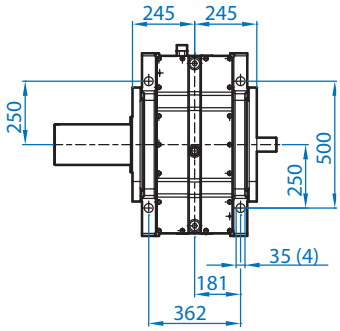

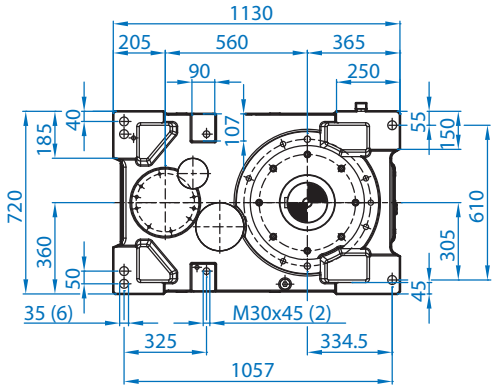

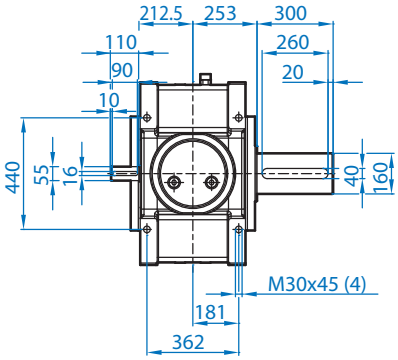

SK 10207/10307 A *

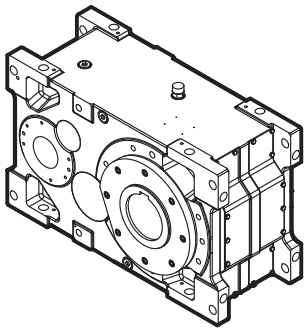

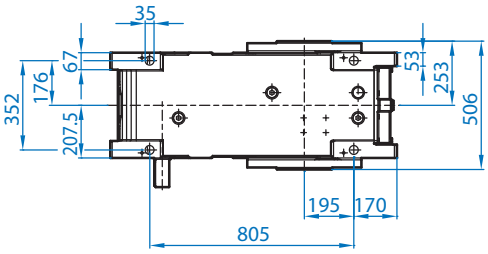

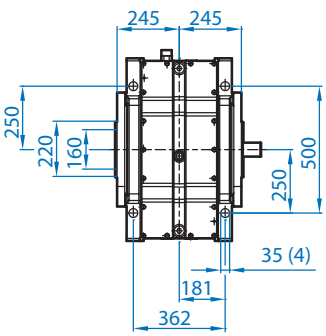

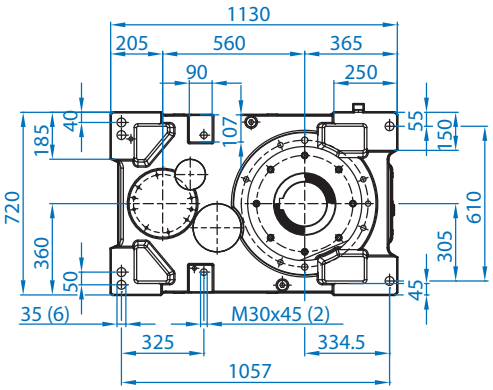

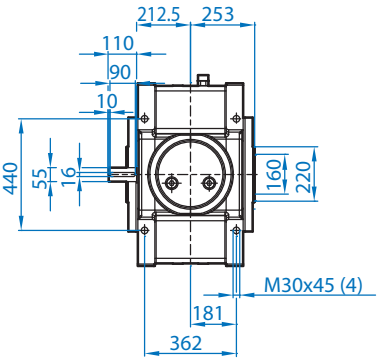

* Dimensions for option "DRY" please see 📖 132-133

SK 10207 / SK 10307

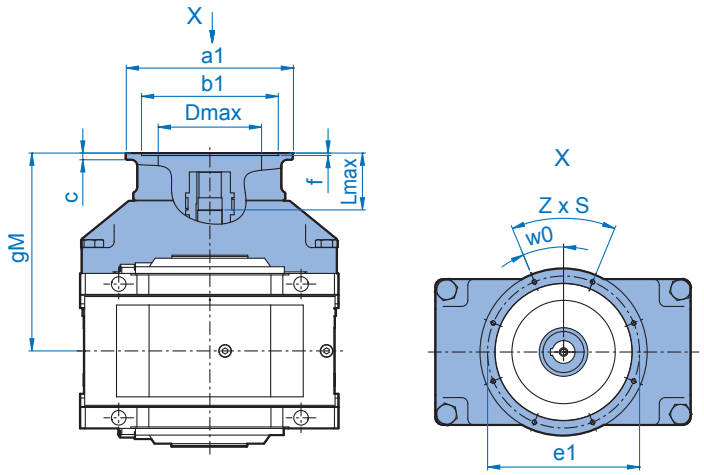

			gM	ø a1	ø b1	ø e1	c	f	z x s	w0°	ø Dmax	Lmax
SK 10207	IEC [1]	100	421,5	250	180	215	11	4	4 x 14,5	0	160	99
		112	421,5	250	180	215	11	4	4 x 14,5	0	160	99
		132	441,5	300	230	265	12	4	4 x 14,5	0	210	119
		160	471,5	350	250	300	15	6,5	4 x 17,5	45	220	149
		180	471,5	350	250	300	15	6,5	4 x 17,5	45	220	149
		200	471,5	400	300	350	17	6,5	4 x 17,5	45	250	149
		225	501,5	450	350	400	18	6,5	8 x 17,5	22,5	250	179
		250	501,5	550	450	500	22	8	8 x M16	22,5	250	179
		280	501,5	550	450	500	22	8	8 x M16	22,5	250	179
		315	531,5	660	550	600	22	8	8 x 22	22,5	250	209
	TN [2]	315	531,5	800	680	740	25	8	8 x 22	22,5	250	209
		355	531,5	900	780	840	25	8	8 x 22	22,5	250	209
SK 10307	IEC [1]	100	421,5	250	180	215	11	4	4 x 14,5	0	160	99
		112	421,5	250	180	215	11	4	4 x 14,5	0	160	99
		132	441,5	300	230	265	12	4	4 x 14,5	0	210	119
		160	471,5	350	250	300	15	6,5	4 x 17,5	45	220	149
		180	471,5	350	250	300	15	6,5	4 x 17,5	45	220	149
		200	471,5	400	300	350	17	6,5	4 x 17,5	45	250	149
		225	501,5	450	350	400	18	6,5	8 x 17,5	22,5	250	179
		250	501,5	550	450	500	22	8	8 x M16	22,5	250	179
		280	501,5	550	450	500	22	8	8 x M16	22,5	250	179
		315	531,5	660	550	600	22	8	8 x 22	22,5	250	209
	TN [2]	315	531,5	800	680	740	25	8	8 x 22	22,5	250	209
		355	531,5	900	780	840	25	8	8 x 22	22,5	250	209

[1] Type designation and dimensions up to 200kW correspond to NORD motors [2] Data for Transnorm motors available on request

			gM	ø a1	ø b1	ø e1	c	f	z x s	w0°	ø Dmax	Lmax
SK 10207	NEMA	254/256 TC	494,5	350	215,9	184,15	38	4	4 x 1/2-13	45	220	172
		284/286 TC	494,5	350	266,7	228,6	38	4	4 x 1/2-13	45	220	172
		324/326 TC	505,5	400	317,5	279,4	51	4	4 x 5/8-11	45	265	183
		364/365 TC	535,5	450	317,5	279,4	52	4	4 x 5/8-11	45	280	213
		404/405 TC	549,5	550	317,5	279,4	70	6	4 x 5/8-11	45	330	227
		444/445 TC	581,5	550	406,4	355,6	102	6	4 x 5/8-11	45	330	259
		447/449 TC	576,5	660	406,4	355,6	67	6	4 x 5/8-11	45	330	254
SK 10307	NEMA	254/256 TC	494,5	350	215,9	184,15	38	4	4 x 1/2-13	45	220	172
		284/286 TC	494,5	350	266,7	228,6	38	4	4 x 1/2-13	45	220	172
		324/326 TC	505,5	400	317,5	279,4	51	4	4 x 5/8-11	45	265	183
		364/365 TC	535,5	450	317,5	279,4	52	4	4 x 5/8-11	45	280	213
		404/405 TC	549,5	550	317,5	279,4	70	6	4 x 5/8-11	45	330	227
		444/445 TC	581,5	550	406,4	355,6	102	6	4 x 5/8-11	45	330	259
		447/449 TC	576,5	660	406,4	355,6	67	6	4 x 5/8-11	45	330	254

SK 11207 / 11307 V

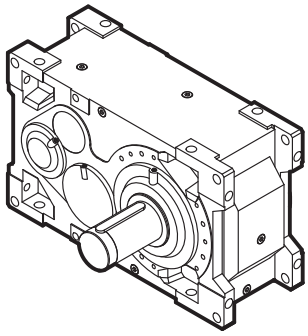

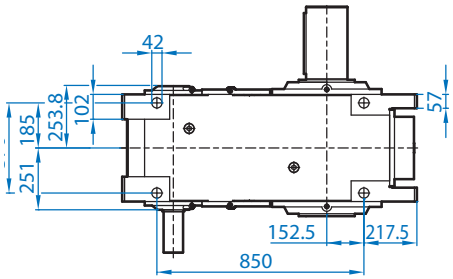

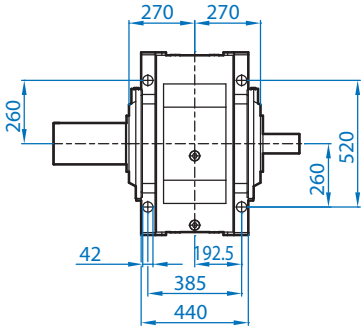

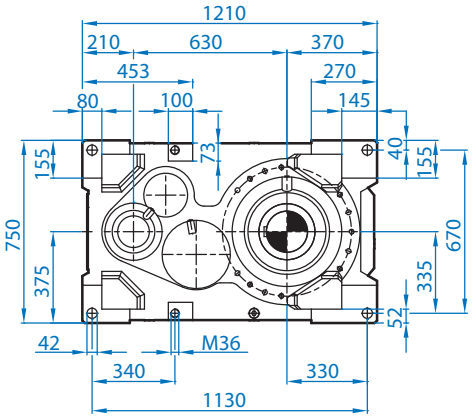

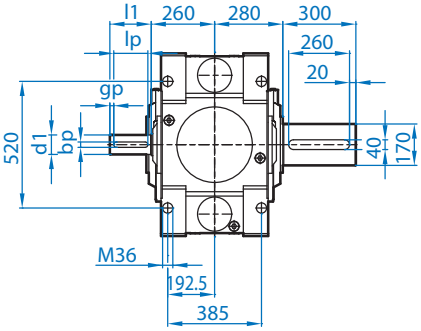

SK 11207 / 11307 A

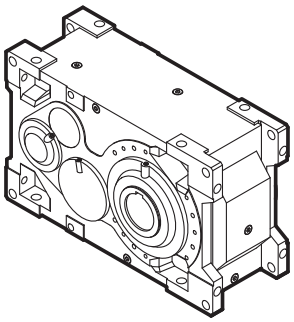

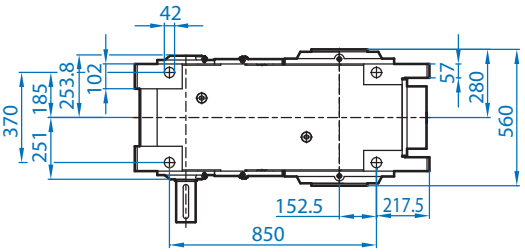

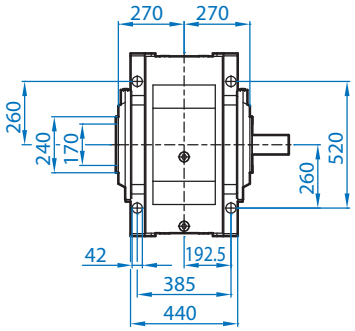

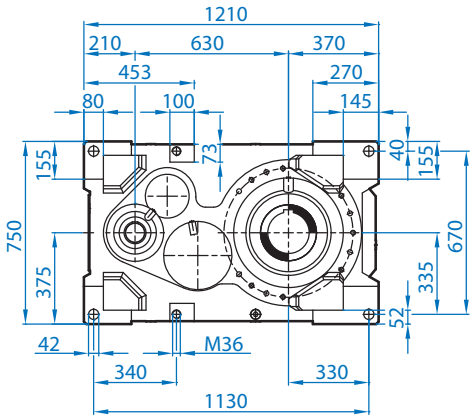

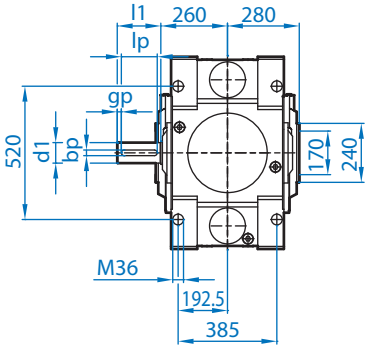

SK 11207 / SK 11307

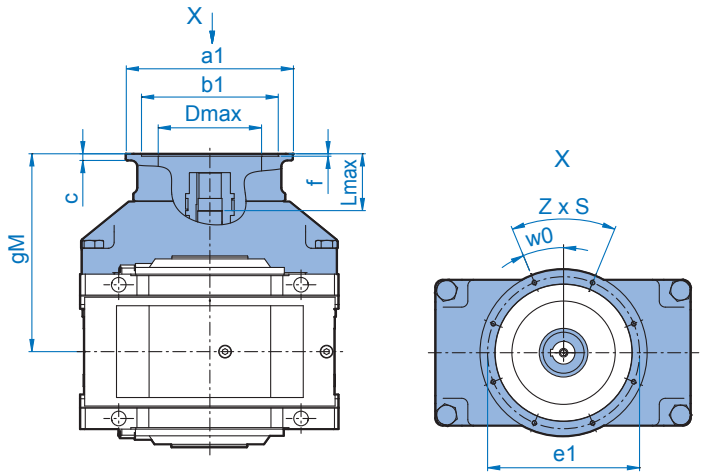

			gM	ø a1	ø b1	ø e1	c	f	z x s	w0°	ø Dmax	Lmax
SK 11207	IEC [1]	160	545	350	250	300	15	6,5	4 x 17,5	45	228	115
		180	545	350	250	300	15	6,5	4 x 17,5	45	228	115
		200	545	400	300	350	17	6,5	4 x 17,5	45	276	115
		225	575	450	350	400	18	6,5	8 x 17,5	22,5	290	145
		250	575	550	450	500	22	8	8 x M16	22,5	340	145
		280	575	550	450	500	22	8	8 x M16	22,5	340	145
		315	605	660	550	600	22	8	8 x 22	22,5	340	175
	TN [2]	315T	605	800	680	740	25	8	8 x 22	22,5	340	175
		355T	605	900	780	840	25	8	8 x 22	22,5	340	175
SK 11307	IEC [1]	160	545	350	250	300	15	6,5	4 x 17,5	45	228	145
		180	545	350	250	300	15	6,5	4 x 17,5	45	228	145
		200	545	400	300	350	17	6,5	4 x 17,5	45	276	145
		225	575	450	350	400	18	6,5	8 x 17,5	22,5	290	175
		250	575	550	450	500	22	8	8 x M16	22,5	340	175
		280	575	550	450	500	22	8	8 x M16	22,5	340	175
		315	605	660	550	600	22	8	8 x 22	22,5	340	205
	TN [2]	315T	605	800	680	740	25	8	8 x 22	22,5	340	205
		355T	605	900	780	840	25	8	8 x 22	22,5	340	205

[1] Type designation and dimensions up to 200kW correspond to NORD motors [2] Data for Transnorm motors available on request

			gM	ø a1	ø b1	ø e1	c	f	z x s	w0°	ø Dmax	Lmax
SK 11207	NEMA	254/256 TC	568	350	215,9	184,15	38	4	4 x 1/2-13	45	220	138
		284/286 TC	568	350	266,7	228,6	38	4	4 x 1/2-13	45	220	138
		324/326 TC	579	400	317,5	279,4	51	4	4 x 5/8-11	45	265	149
		364/365 TC	609	450	317,5	279,4	52	4	4 x 5/8-11	45	280	179
		404/405 TC	623	550	317,5	279,4	70	6	4 x 5/8-11	45	330	193
		444/445 TC	655	550	406,4	355,6	102	6	4 x 5/8-11	45	330	225
		447/449 TC	650	660	406,4	355,6	67	6	4 x 5/8-11	45	330	220
SK 11307	NEMA	254/256 TC	568	350	215,9	184,15	38	4	4 x 1/2-13	45	220	168
		284/286 TC	568	350	266,7	228,6	38	4	4 x 1/2-13	45	220	168
		324/326 TC	579	400	317,5	279,4	51	4	4 x 5/8-11	45	265	179
		364/365 TC	609	450	317,5	279,4	52	4	4 x 5/8-11	45	280	209
		404/405 TC	623	550	317,5	279,4	70	6	4 x 5/8-11	45	330	223
		444/445 TC	655	550	406,4	355,6	102	6	4 x 5/8-11	45	330	255
		447/449 TC	650	660	406,4	355,6	67	6	4 x 5/8-11	45	330	250

SK 12207 / 12307 V

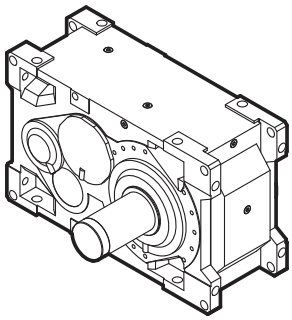

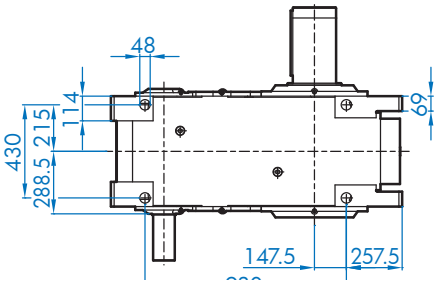

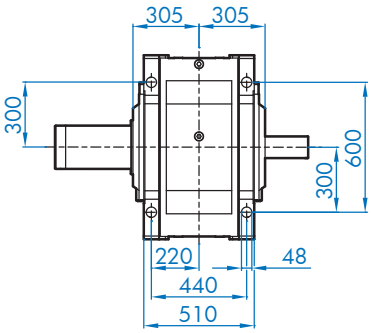

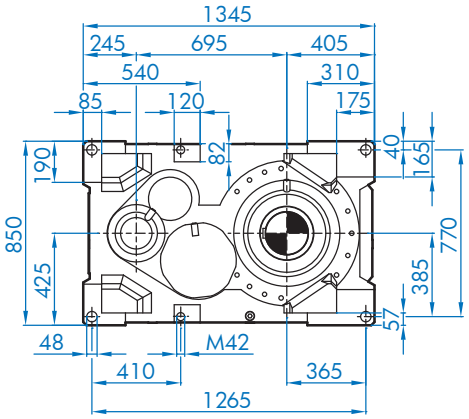

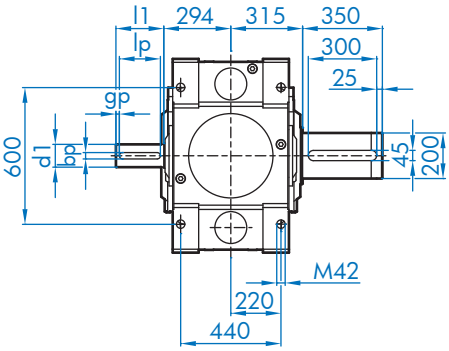

SK 12207 / 12307 A

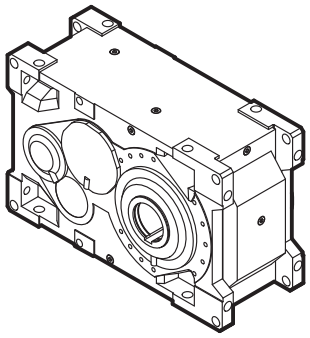

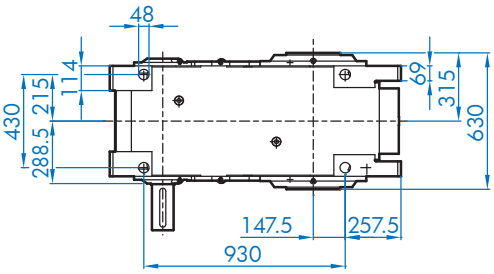

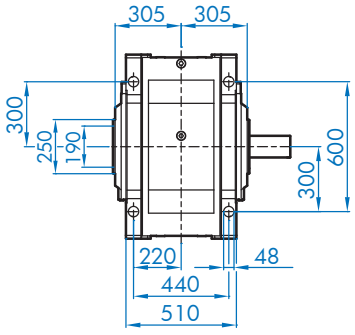

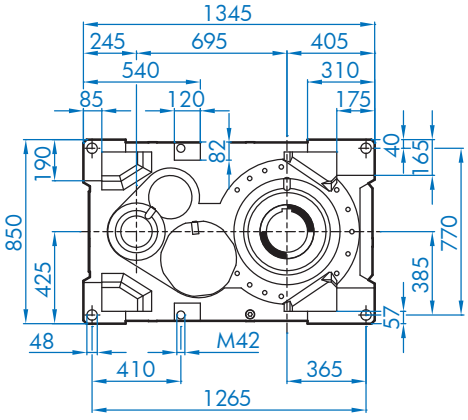

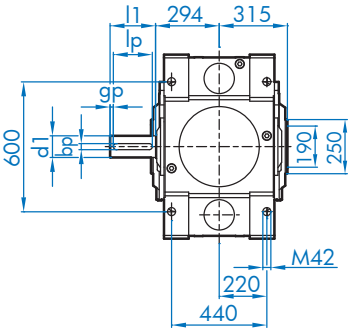

SK 12207 / SK 12307

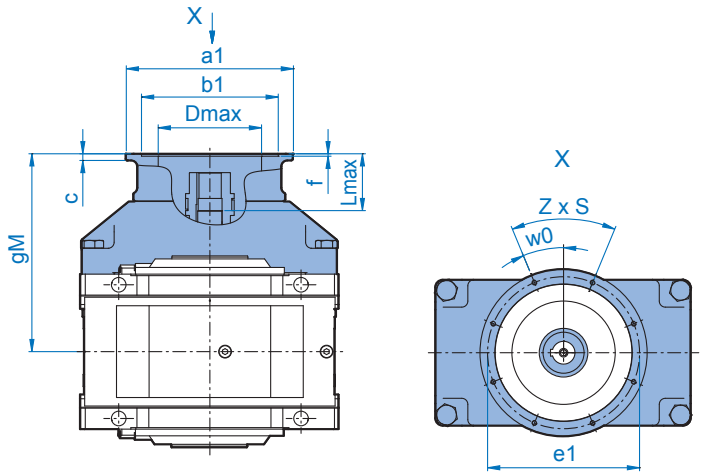

			gM	ø a1	ø b1	ø e1	c	f	z x s	w0°	ø Dmax	Lmax
SK 12207	IEC [1]	160	621	350	250	300	15	6,5	4 x 17,5	45	228	117
		180	621	350	250	300	15	6,5	4 x 17,5	45	228	117
		200	621	400	300	350	17	6,5	4 x 17,5	45	276	117
		225	651	450	350	400	18	6,5	8 x 17,5	22,5	290	147
		250	651	550	450	500	22	8	8 x M16	22,5	340	147
		280	651	550	450	500	22	8	8 x M16	22,5	340	147
		315	681	660	550	600	22	8	8 x 22	22,5	340	177
	TN [2]	315T	681	800	680	740	25	8	8 x 22	22,5	340	177
		355T	681	900	780	840	25	8	8 x 22	22,5	340	177
SK 12307	IEC [1]	160	621	350	250	300	15	6,5	4 x 17,5	45	228	157
		180	621	350	250	300	15	6,5	4 x 17,5	45	228	157
		200	621	400	300	350	17	6,5	4 x 17,5	45	276	157
		225	651	450	350	400	18	6,5	8 x 17,5	22,5	290	187
		250	651	550	450	500	22	8	8 x M16	22,5	340	187
		280	651	550	450	500	22	8	8 x M16	22,5	340	187
		315	681	660	550	600	22	8	8 x 22	22,5	340	217
	TN [2]	315T	681	800	680	740	25	8	8 x 22	22,5	340	217
		355T	681	900	780	840	25	8	8 x 22	22,5	340	217

[1] Type designation and dimensions up to 200kW correspond to NORD motors [2] Data for Transnorm motors available on request

			gM	ø a1	ø b1	ø e1	c	f	z x s	w0°	ø Dmax	Lmax
SK 12207	NEMA	254/256 TC	644	350	215,9	184,15	38	4	4 x 1/2-13	45	220	140
		284/286 TC	644	350	266,7	228,6	38	4	4 x 1/2-13	45	220	140
		324/326 TC	655	400	317,5	279,4	51	4	4 x 5/8-11	45	265	151
		364/365 TC	685	450	317,5	279,4	52	4	4 x 5/8-11	45	280	181
		404/405 TC	699	550	317,5	279,4	70	6	4 x 5/8-11	45	330	195
		444/445 TC	731	550	406,4	355,6	102	6	4 x 5/8-11	45	330	227
		447/449 TC	726	660	406,4	355,6	67	6	4 x 5/8-11	45	330	222
SK 12307	NEMA	254/256 TC	644	350	215,9	184,15	38	4	4 x 1/2-13	45	220	180
		284/286 TC	644	350	266,7	228,6	38	4	4 x 1/2-13	45	220	180
		324/326 TC	655	400	317,5	279,4	51	4	4 x 5/8-11	45	265	191
		364/365 TC	685	450	317,5	279,4	52	4	4 x 5/8-11	45	280	221
		404/405 TC	699	550	317,5	279,4	70	6	4 x 5/8-11	45	330	235
		444/445 TC	731	550	406,4	355,6	102	6	4 x 5/8-11	45	330	267
		447/449 TC	726	660	406,4	355,6	67	6	4 x 5/8-11	45	330	262

SK 13207 / 13307 V

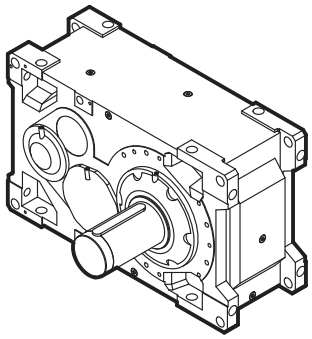

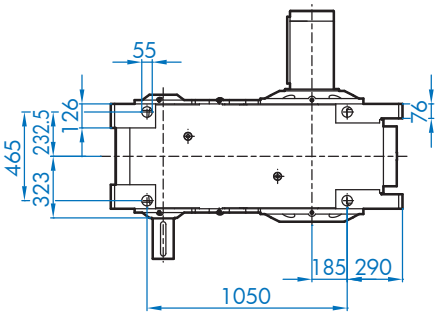

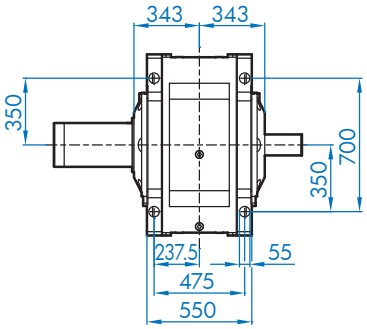

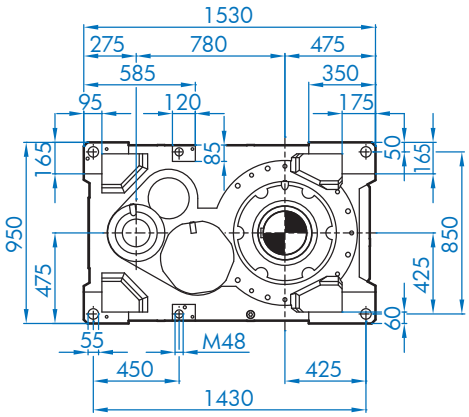

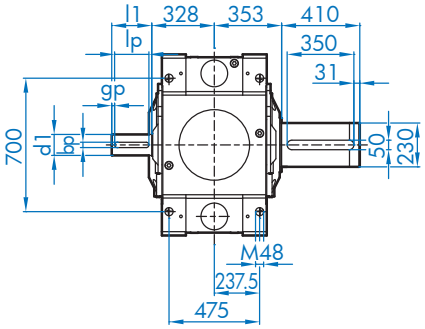

SK 13207 / 13307 A

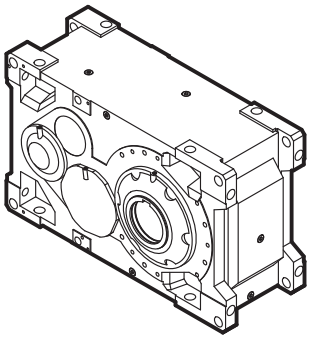

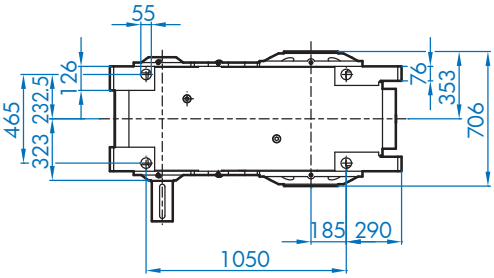

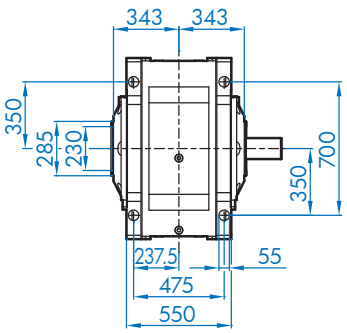

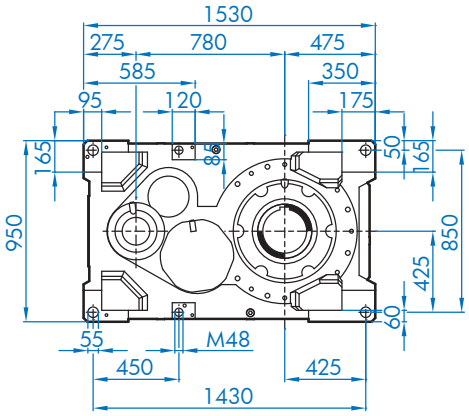

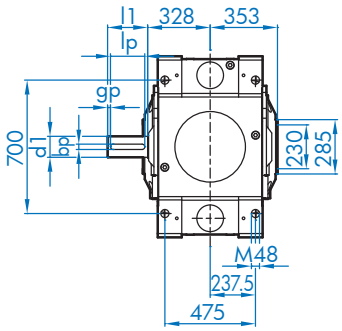

SK 13207 / SK 13307

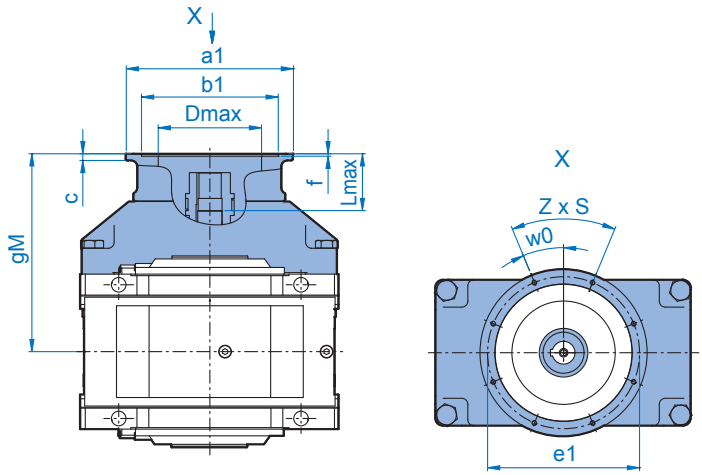

			gM	ø a1	ø b1	ø e1	c	f	z x s	w0°	ø Dmax	Lmax
SK 13207	IEC [1]	160	656	350	250	300	15	6,5	4 x 17,5	45	228	118
		180	656	350	250	300	15	6,5	4 x 17,5	45	228	118
		200	656	400	300	350	17	6,5	4 x 17,5	45	276	118
		225	686	450	350	400	18	6,5	8 x 17,5	22,5	290	148
		250	686	550	450	500	22	8	8 x M16	22,5	340	148
		280	686	550	450	500	22	8	8 x M16	22,5	340	148
		315	716	660	550	600	22	8	8 x 22	22,5	340	178
	TN [2]	315T	716	800	680	740	25	8	8 x 22	22,5	340	178
		355T	716	900	780	840	25	8	8 x 22	22,5	340	178
SK 13307	IEC [1]	160	656	350	250	300	15	6,5	4 x 17,5	45	228	158
		180	656	350	250	300	15	6,5	4 x 17,5	45	228	158
		200	656	400	300	350	17	6,5	4 x 17,5	45	276	158
		225	686	450	350	400	18	6,5	8 x 17,5	22,5	290	188
		250	686	550	450	500	22	8	8 x M16	22,5	340	188
		280	686	550	450	500	22	8	8 x M16	22,5	340	188
		315	716	660	550	600	22	8	8 x 22	22,5	340	218
	TN [2]	315T	716	800	680	740	25	8	8 x 22	22,5	340	218
		355T	716	900	780	840	25	8	8 x 22	22,5	340	218

[1] Type designation and dimensions up to 200kW correspond to NORD motors [2] Data for Transnorm motors available on request

			gM	ø a1	ø b1	ø e1	c	f	z x s	w0°	ø Dmax	Lmax
SK 13207	NEMA	254/256 TC	679	350	215,9	184,15	38	4	4 x 1/2-13	45	220	141
		284/286 TC	679	350	266,7	228,6	38	4	4 x 1/2-13	45	220	141
		324/326 TC	690	400	317,5	279,4	51	4	4 x 5/8-11	45	265	152
		364/365 TC	720	450	317,5	279,4	52	4	4 x 5/8-11	45	280	182
		404/405 TC	734	550	317,5	279,4	70	6	4 x 5/8-11	45	330	196
		444/445 TC	766	550	406,4	355,6	102	6	4 x 5/8-11	45	330	228
		447/449 TC	761	660	406,4	355,6	67	6	4 x 5/8-11	45	330	223
SK 13307	NEMA	254/256 TC	679	350	215,9	184,15	38	4	4 x 1/2-13	45	220	181
		284/286 TC	679	350	266,7	228,6	38	4	4 x 1/2-13	45	220	181
		324/326 TC	690	400	317,5	279,4	51	4	4 x 5/8-11	45	265	192
		364/365 TC	720	450	317,5	279,4	52	4	4 x 5/8-11	45	280	222
		404/405 TC	734	550	317,5	279,4	70	6	4 x 5/8-11	45	330	236
		444/445 TC	766	550	406,4	355,6	102	6	4 x 5/8-11	45	330	268
		447/449 TC	761	660	406,4	355,6	67	6	4 x 5/8-11	45	330	263

SK 14207 / 14307 V

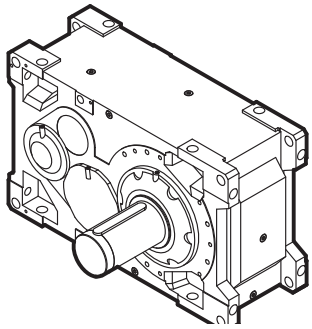

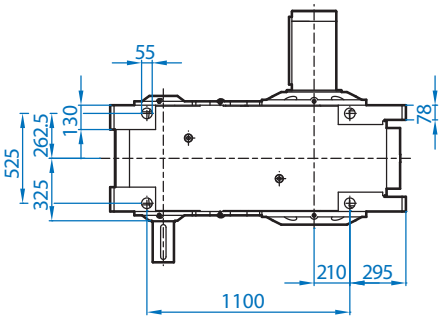

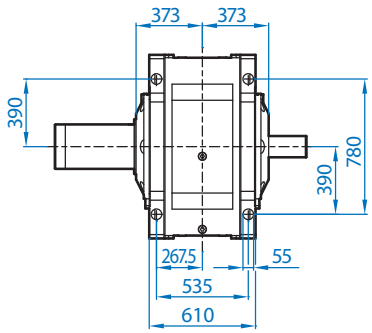

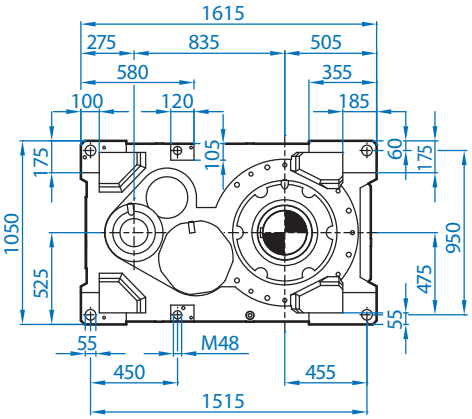

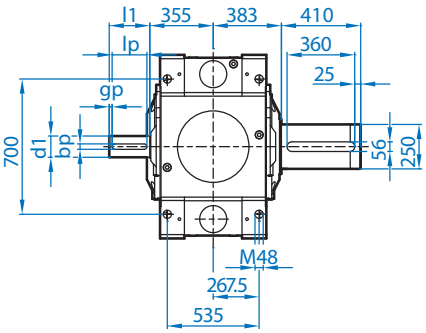

SK 14207 / 14307 A

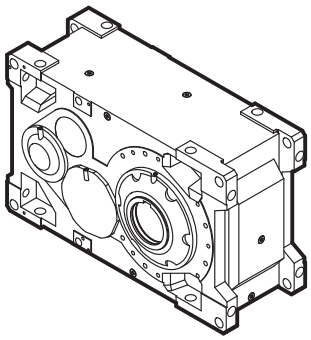

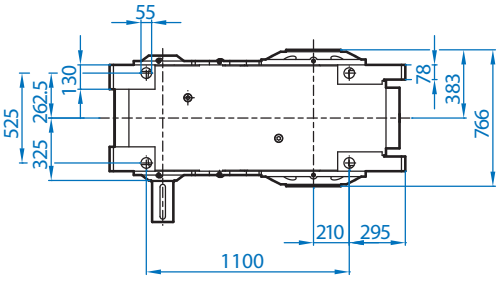

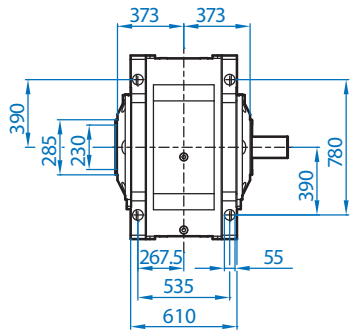

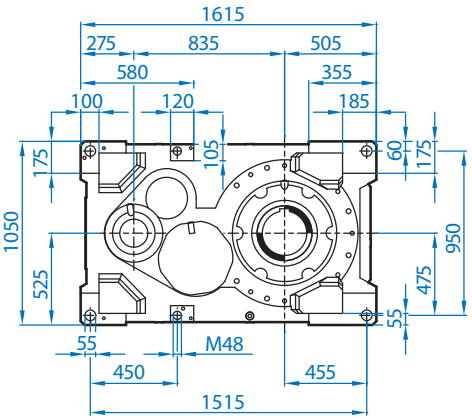

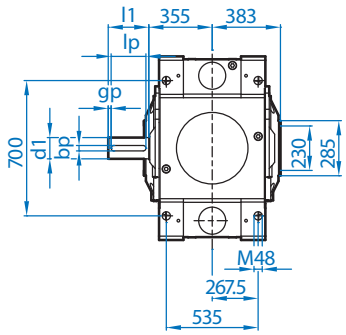

SK 14207 / SK 14307

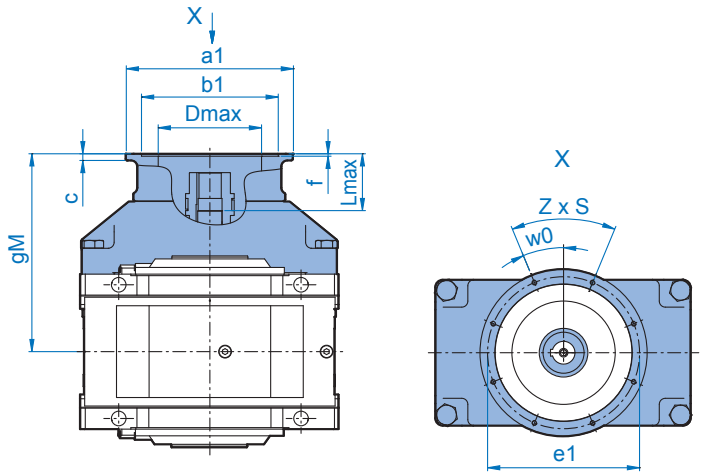

			gM	ø a1	ø b1	ø e1	c	f	z x s	w0°	ø Dmax	Lmax
SK 14207	IEC [1]	160	686	350	250	300	15	6,5	4 x 17,5	45	228	118
		180	686	350	250	300	15	6,5	4 x 17,5	45	228	118
		200	686	400	300	350	17	6,5	4 x 17,5	45	276	118
		225	716	450	350	400	18	6,5	8 x 17,5	22,5	290	148
		250	716	550	450	500	22	8	8 x M16	22,5	340	148
		280	716	550	450	500	22	8	8 x M16	22,5	340	148
		315	746	660	550	600	22	8	8 x 22	22,5	340	178
	TN [2]	315	746	800	680	740	25	8	8 x 22	22,5	340	178
		355	746	900	780	840	25	8	8 x 22	22,5	340	178
SK 14307	IEC [1]	160	686	350	250	300	15	6,5	4 x 17,5	45	228	158
		180	686	350	250	300	15	6,5	4 x 17,5	45	228	158
		200	686	400	300	350	17	6,5	4 x 17,5	45	276	158
		225	716	450	350	400	18	6,5	8 x 17,5	22,5	290	188
		250	716	550	450	500	22	8	8 x M16	22,5	340	188
		280	716	550	450	500	22	8	8 x M16	22,5	340	188
		315	746	660	550	600	22	8	8 x 22	22,5	340	218
	TN [2]	315	746	800	680	740	25	8	8 x 22	22,5	340	218
		355	746	900	780	840	25	8	8 x 22	22,5	340	218

[1] Type designation and dimensions up to 200kW correspond to NORD motors [2] Data for Transnorm motors available on request

			gM	ø a1	ø b1	ø e1	c	f	z x s	w0°	ø Dmax	Lmax
SK 14207	NEMA	254/256 TC	709	350	215,9	184,15	38	4	4 x 1/2-13	45	220	141
		284/286 TC	709	350	266,7	228,6	38	4	4 x 1/2-13	45	220	141
		324/326 TC	709	400	317,5	279,4	51	4	4 x 5/8-11	45	265	152
		364/365 TC	739	450	317,5	279,4	52	4	4 x 5/8-11	45	280	182
		404/405 TC	739	550	317,5	279,4	70	6	4 x 5/8-11	45	330	196
		444/445 TC	769	550	406,4	355,6	102	6	4 x 5/8-11	45	330	228
		447/449 TC	769	660	406,4	355,6	67	6	4 x 5/8-11	45	330	223
SK 14307	NEMA	254/256 TC	709	350	215,9	184,15	38	4	4 x 1/2-13	45	220	181
		284/286 TC	709	350	266,7	228,6	38	4	4 x 1/2-13	45	220	181
		324/326 TC	709	400	317,5	279,4	51	4	4 x 5/8-11	45	265	192
		364/365 TC	739	450	317,5	279,4	52	4	4 x 5/8-11	45	280	222
		404/405 TC	739	550	317,5	279,4	70	6	4 x 5/8-11	45	330	236
		444/445 TC	769	550	406,4	355,6	102	6	4 x 5/8-11	45	330	268
		447/449 TC	769	660	406,4	355,6	67	6	4 x 5/8-11	45	330	263

SK 15207 / 15307 V

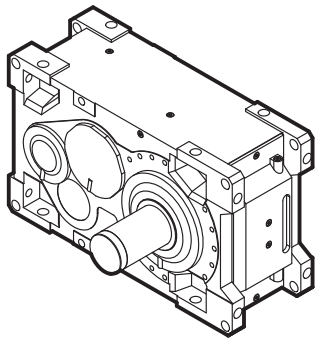

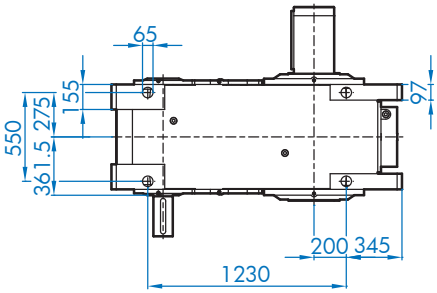

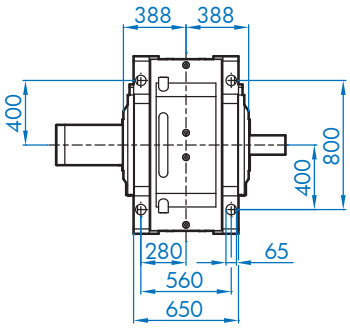

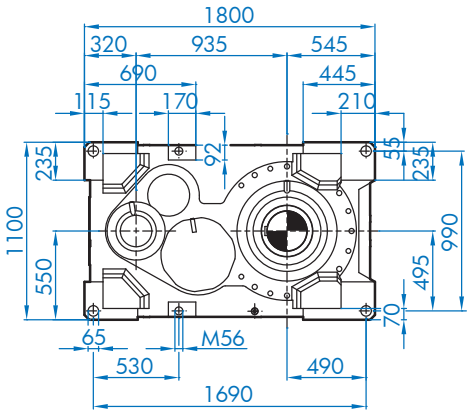

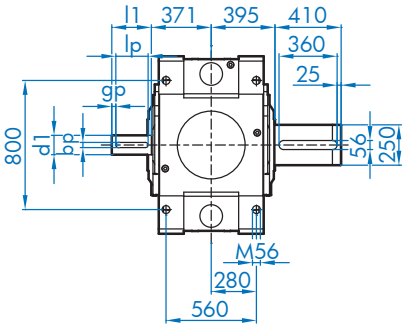

SK 15207 / 15307 A

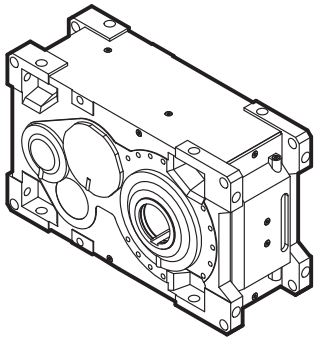

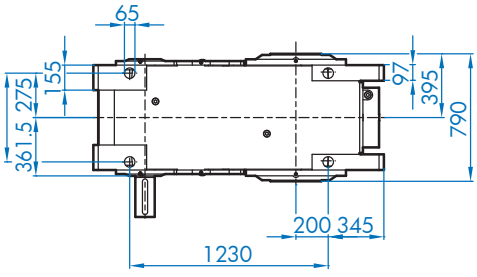

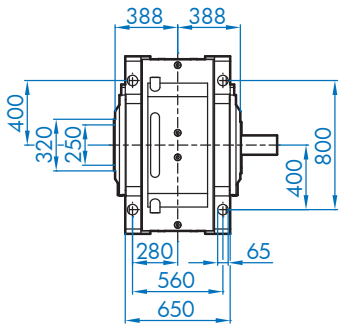

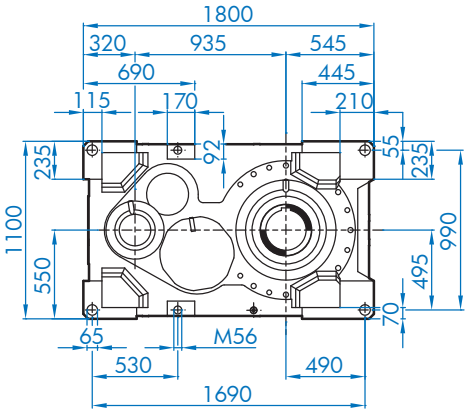

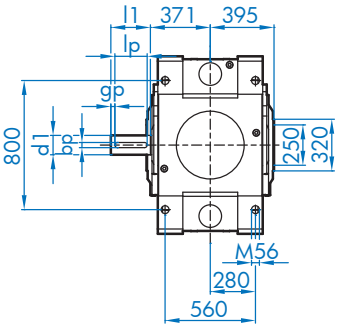

SK 15207 / SK 15307

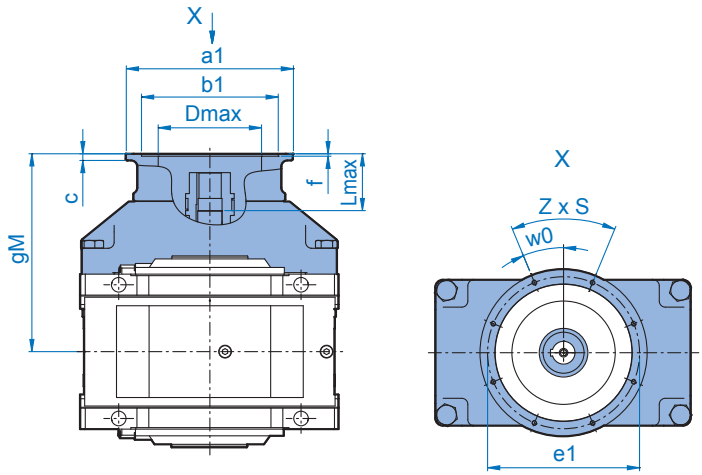

			gM	ø a1	ø b1	ø e1	c	f	z x s	w0°	ø Dmax	Lmax
SK 15207	IEC [1]	160	735	350	250	300	15	6,5	4 x 17,5	45	228	119
		180	735	350	250	300	15	6,5	4 x 17,5	45	228	119
		200	735	400	300	350	17	6,5	4 x 17,5	45	276	119
		225	765	450	350	400	18	6,5	8 x 17,5	22,5	290	149
		250	765	550	450	500	22	8	8 x M16	22,5	340	149
		280	765	550	450	500	22	8	8 x M16	22,5	340	149
		315	795	660	550	600	22	8	8 x 22	22,5	340	179
	TN [2]	315T	795	800	680	740	25	8	8 x 22	22,5	340	179
		355T	795	900	780	840	25	8	8 x 22	22,5	340	179
SK 15307	IEC [1]	160	735	350	250	300	15	6,5	4 x 17,5	45	228	154 / 194
		180	735	350	250	300	15	6,5	4 x 17,5	45	228	154 / 194
		200	735	400	300	350	17	6,5	4 x 17,5	45	276	154 / 194
		225	765	450	350	400	18	6,5	8 x 17,5	22,5	290	184 / 224
		250	765	550	450	500	22	8	8 x M16	22,5	340	184 / 224
		280	765	550	450	500	22	8	8 x M16	22,5	340	184 / 224
		315	795	660	550	600	22	8	8 x 22	22,5	340	214 / 254
	TN [2]	315T	795	800	680	740	25	8	8 x 22	22,5	340	214 / 254
		355T	795	900	780	840	25	8	8 x 22	22,5	340	214 / 254

[1] Type designation and dimensions up to 200kW correspond to NORD motors [2] Data for Transnorm motors available on request

			gM	ø a1	ø b1	ø e1	c	f	z x s	w0°	ø Dmax	Lmax
SK 15207	NEMA	254/256 TC	758	350	215,9	184,15	38	4	4 x 1/2-13	45	220	142
		284/286 TC	758	350	266,7	228,6	38	4	4 x 1/2-13	45	220	142
		324/326 TC	769	400	317,5	279,4	51	4	4 x 5/8-11	45	265	153
		364/365 TC	799	450	317,5	279,4	52	4	4 x 5/8-11	45	280	183
		404/405 TC	813	550	317,5	279,4	70	6	4 x 5/8-11	45	330	197
		444/445 TC	845	550	406,4	355,6	102	6	4 x 5/8-11	45	330	229
		447/449 TC	840	660	406,4	355,6	67	6	4 x 5/8-11	45	330	224
SK 15307	NEMA	254/256 TC	758	350	215,9	184,15	38	4	4 x 1/2-13	45	220	177 / 217
		284/286 TC	758	350	266,7	228,6	38	4	4 x 1/2-13	45	220	177 / 217
		324/326 TC	769	400	317,5	279,4	51	4	4 x 5/8-11	45	265	188 / 228
		364/365 TC	799	450	317,5	279,4	52	4	4 x 5/8-11	45	280	218 / 258
		404/405 TC	813	550	317,5	279,4	70	6	4 x 5/8-11	45	330	232 / 272
		444/445 TC	845	550	406,4	355,6	102	6	4 x 5/8-11	45	330	264 / 304
		447/449 TC	840	660	406,4	355,6	67	6	4 x 5/8-11	45	330	259 / 299

A - Keyed Hollow Shaft
AVL2/3/4 - Agitator & Drywell Hollow Shaft

A - Keyed Hollow Shaft & Customer Shaft Detail

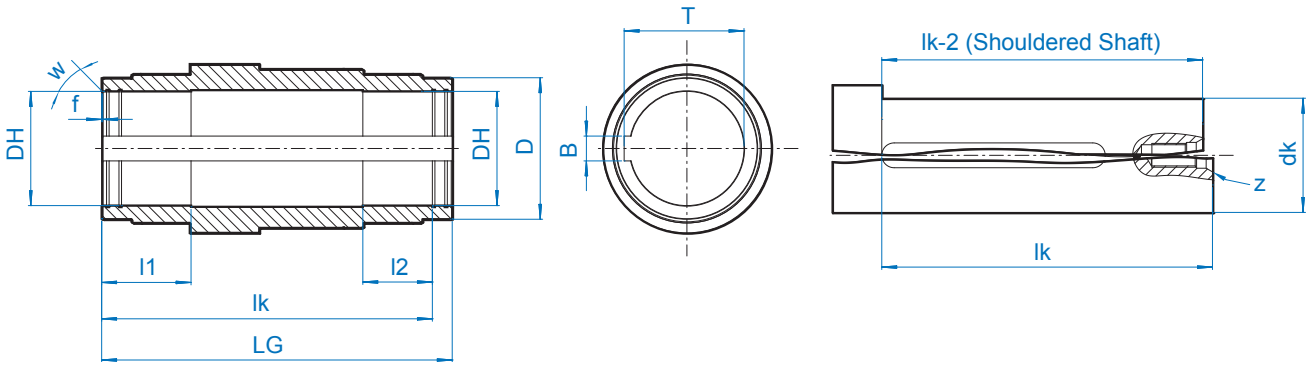

	ø DH H7	LG	ø dk h6	lk	lk-2	l1	l2	ø D	f	w	B	T	z
SK 5.07	105	385	105	355	353	100	70	140	3	15	28	111,4	M24
SK 6.07	105	385	105	355	353	100	70	140	3	15	28	111,4	M24
SK 7.07	125	394	125	359	357	100	65	160	2	30	32	132,4	M24
SK 8.07	125	394	125	359	357	100	65	160	2	30	32	132,4	M24
SK 9.07 *	160 (145)	506	160	486	484	130	95	220	2	30	40	169,4	M36
SK 10.07 *	160 (145)	506	160	486	484	130	95	220	2	30	40	169,4	M36
SK 11.07	170	560	170	525	523	140	105	240	2	30	40	179,4	M36
SK 12.07	190	630	190	595	593	160	125	250	2	30	45	200,4	M36
SK 13.07	230	706	230	666	664	180	140	285	2	30	50	241,4	M48
SK 14.07	230	766	230	726	724	180	140	285	2	30	50	241,4	M48
SK 15.07	250	790	250	745	743	200	155	320	2	30	56	262,4	M48

* with option DRY max ø 145

AVL2/3/4 - Agitator & Drywell - Hollow Shaft

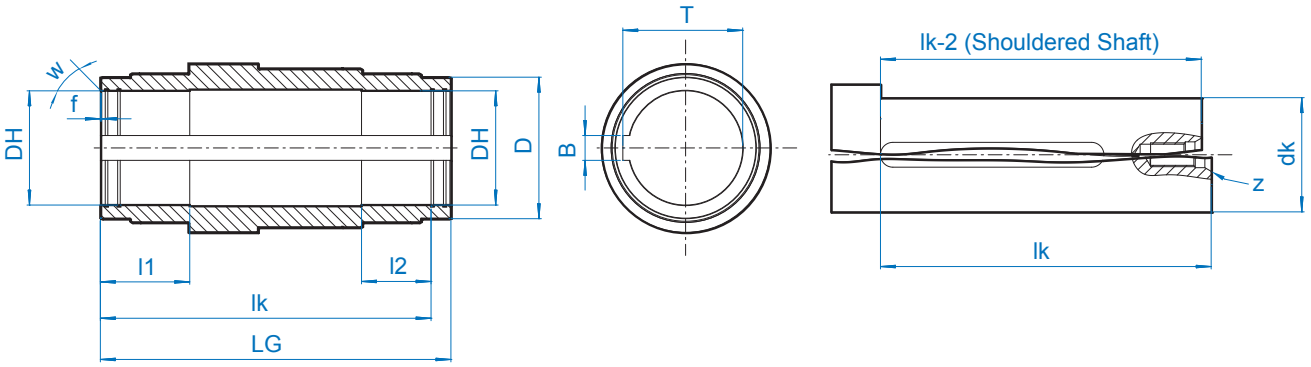

	ø DH H7	LG	ø dk h6	lk	lk-2	l1	l2	ø D	f	w	B	T	z
SK 5.07	105	594	105	564	562	100	70	140	3	15	28	111,4	M24
SK 6.07	105	594	105	564	562	100	70	140	3	15	28	111,4	M24
SK 7.07	125	682	125	647	645	100	80	160	2	30	32	132,4	M24
SK 8.07	125	682	125	647	645	100	80	160	2	30	32	132,4	M24
SK 9.07	130	770,5	160	745,5	743,5	110	80	220	2	30	40	169,4	M36
SK 10.07	130	770,5	160	745,5	743,5	110	80	220	2	30	40	169,4	M36
SK 11.07	170	730	170	695	693	140	105	240	2	30	40	179,4	M36
SK 12.07	190	800	190	765	763	160	125	250	2	30	45	200,4	M36
SK 13.07	230	896	230	856	854	180	140	285	2	30	50	241,4	M48
SK 14.07	230	956	230	916	914	180	140	285	2	30	50	241,4	M48
SK 15.07	250	1040	250	995	993	200	155	320	2	30	56	262,4	M48

For Tolerance Info See ⇨ 48

AS - Shrink Disc with Hollow Shaft
ASVL2/3/4 - Agitator & Drywell-Hollow Shaft with Shrink Disc

AS - Shrink Disc Hollow Shaft

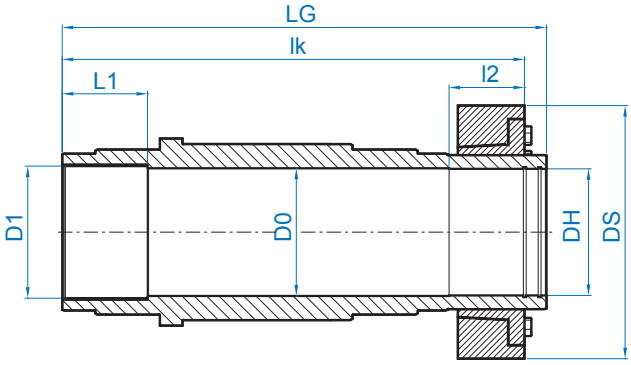

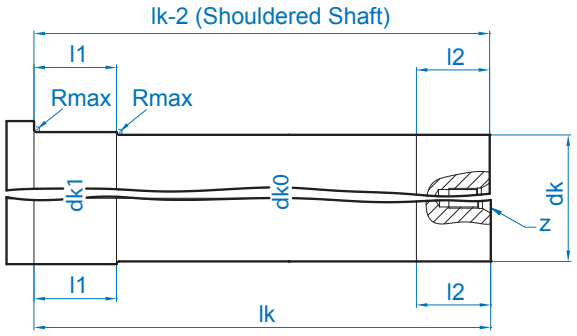

	ø DH H7	ø D0	ø D1	L1	ø DS	LG	ø dk1 h8	ø dk0	ø dk	lk	lk-2	l1	l2	Rmax	z
SK 5.07	110	110,5	110	85	230	458	110	110	110 h6	448	446	80	65	3	M24
SK 6.07	110	110,5	110	85	230	458	110	110	110 h6	448	446	80	65	3	M24
SK 7.07	125	125,5	125	90	290	484	125	125	125 h6	465	463	100	65	3	M24
SK 8.07	125	125,5	125	90	290	484	125	125	125 h6	465	463	100	65	3	M24
SK 9.07 *	160 (145)	160,5	160	110	320	628	160	160	160 h6	596	594	110	85	3	M36
SK 10.07*	160 (145)	160,5	160	110	320	628	160	160	160 h6	596	594	110	85	3	M36
SK 11.07	170	172	180	125	370	690	180	170	170 g6	658	656	125	105	5	M36
SK 12.07	190	192	200	135	405	770	200	190	190 g6	736	734	130	120	5	M36
SK 13.07	230	232	240	155	460	880	240	230	230 g6	838	836	150	135	5	M48
SK 14.07	230	232	240	155	460	940	240	230	230 g6	898	896	150	135	5	M48
SK 15.07	250	252	260	175	485	970	260	250	250 g6	928	926	175	150	5	M48

* to Option DRY max. ø145

ASVL2/3/4 - Agitator & Drywell - Hollow Shaft with Shrink Disc

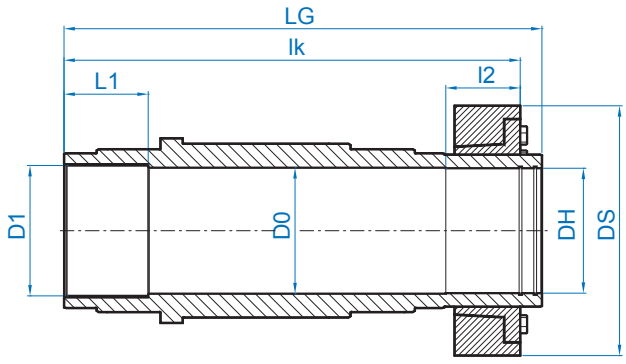

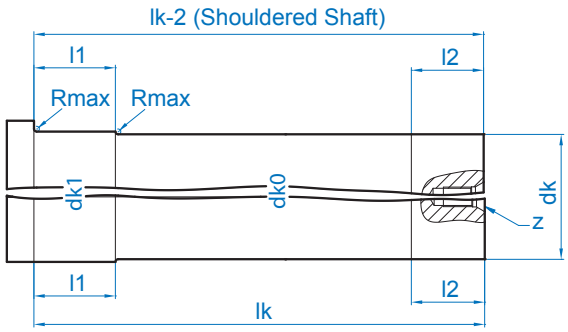

	ø DH H7	ø D0	ø D1	L1	ø DS	LG	ø dk1 h8	ø dk0	ø dk	lk	lk2	l1	l2	Rmax	z
SK 5.07	110	110,5	110	85	230	667	110	110	110 h6	657	655	80	65	3	M24
SK 6.07	110	110,5	110	85	230	667	110	110	110 h6	657	655	80	65	3	M24
SK 7.07	125	125,5	125	90	300	767	125	125	125 h6	713	711	100	65	3	M24
SK 8.07	125	125,5	125	90	300	767	125	125	125 h6	713	711	100	65	3	M24
SK 9.07	130	160,5	160	110	320	889,5	160	160	160 h6	854,5	852,5	110	82	3	M36
SK 10.07	130	160,5	160	110	320	889,5	160	160	160 h6	854,5	852,5	110	82	3	M36
SK 11.07	170	172	180	125	370	860	180	170	170 g6	828	826	125	105	5	M36
SK 12.07	190	192	200	135	405	940	200	190	190 g6	906	904	130	120	5	M36
SK 13.07	230	232	240	155	460	1070	240	230	230 g6	1028	1026	155	135	5	M48
SK 14.07	230	232	240	155	460	1130	240	230	230 g6	1088	1086	155	135	5	M48
SK 15.07	250	252	260	175	485	1220	260	250	250 g6	1178	1176	170	150	5	M48

For Tolerance Info See ⇨ 48

EV - Splined Solid Shaft
EA - Splined Hollow Shaft





NORD DRIVESYSTEMS

EV - Splined Solid Shaft

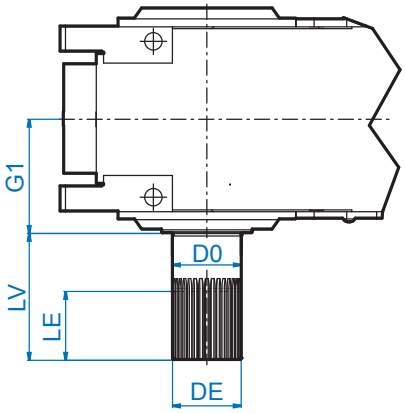

Other cover sizes available upon request

	DE	LE	G1	LV	ø D0
SK 5.07	W 100 x 5 x 30 x 18 - DIN 5480	85	192,5	210	100
SK 6.07	W 100 x 5 x 30 x 18 - DIN 5480	85	192,5	210	100
SK 7.07	W 130 x 5 x 30 x 24 - DIN 5480	85	197	250	130
SK 8.07	W 130 x 5 x 30 x 24 - DIN 5480	85	197	250	130
SK 9.07	W 140 x 3 x 30 x 45 - DIN 5480	100	253	300	140
SK 10.07	W 140 x 3 x 30 x 45 - DIN 5480	100	253	300	140
SK 11.07	W 170 x 5 x 30 x 32 - DIN 5480	160	280	300	170
SK 12.07	W 190 x 5 x 30 x 36 - DIN 5480	190	315	350	190
SK 13.07	W 220 x 5 x 30 x 42 - DIN 5480	215	353	410	220
SK 14.07	W 220 x 5 x 30 x 42 - DIN 5480	215	353	410	220
SK 15.07	W 250 x 5 x 30 x 48 - DIN 5480	245	395	410	250

EA - Splined Hollow Shaft

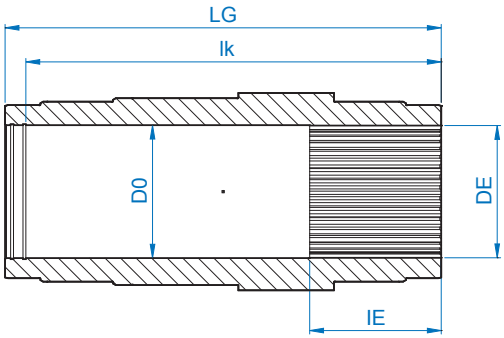

	DE	LE	LG	ø D0	lk
SK 5.07	N 100 x 5 x 30 x 18 - DIN 5480	85	385	100	355
SK 6.07	N 100 x 5 x 30 x 18 - DIN 5480	85	385	100	355
SK 7.07	N 130 x 5 x 30 x 24 - DIN 5480	85	394	130	374
SK 8.07	N 130 x 5 x 30 x 24 - DIN 5480	85	394	130	374
SK 9.07 *	N 140 x 3 x 30 x 45 - DIN 5480	100	506	140	476
SK 10.07*	N 140 x 3 x 30 x 45 - DIN 5480	100	506	140	476
SK 11.07	N 170 x 5 x 30 x 32 - DIN 5480	160	560	170	525
SK 12.07	N 190 x 5 x 30 x 36 - DIN 5480	190	630	190	595
SK 13.07	N 220 x 5 x 30 x 42 - DIN 5480	215	706	220	666
SK 14.07	N 220 x 5 x 30 x 42 - DIN 5480	215	706	220	666
SK 15.07	N 250 x 5 x 30 x 48 - DIN 5480	245	790	250	745

* Deviating dimensions with option DRY, please contact NORD DRIVESYSTEMS.

For Tolerance Info See ⇨ 48





H/H66 - Hollow Shaft/Shrink Disc/IP66 Cover B - Fixing Kit

H/H66 - Hollow Shaft/Shrink Disc/ IP66 cover

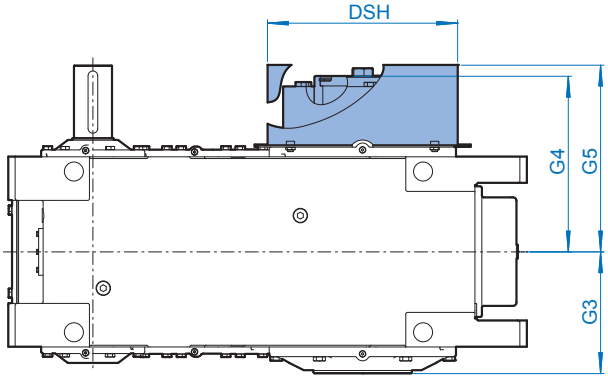

	ø DSH	G3	G4	G5
SK 5.07	258	192,5	255,5	287,5
SK 6.07	258	192,5	255,5	287,5
SK 7.07	319	199	286	308
SK 8.07	319	199	286	308
SK 9.07	453	253	373	393
SK 10.07	453	253	373	393
SK 11.07	460	280	410	440
SK 12.07	500	315	455	480
SK 13.07	550	353	527	555
SK 14.07	550	383	557	585
SK 15.07	630	395	575	605

B - Fixing Kit

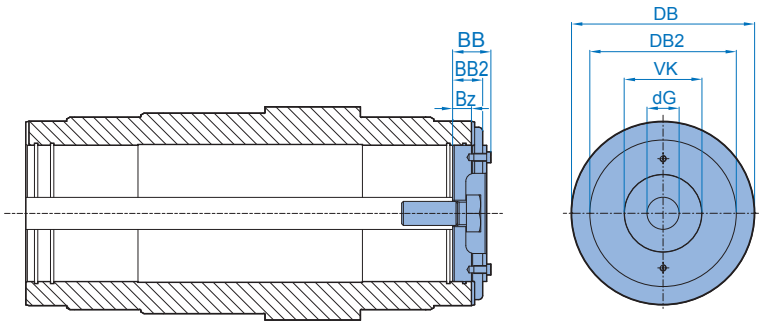

	ø DB	ø DB2	ø VK	BB	BB2	Bz	ø dG
SK 5.07	135	124,8	62	30,0	30,0	10,0	26 (M24)
SK 6.07	135	124,8	62	30,0	30,0	10,0	26 (M24)
SK 7.07	155	124,8	49	27,0	22,0	10,0	26 (M24)
SK 8.07	155	124,8	49	27,0	22,0	10,0	26 (M24)
SK 9.07	215	159,8	100	42,5	27,5	15,5	33 (M36)
SK 10.07	215	159,8	100	42,5	27,5	15,5	33 (M36)
SK 11.07	215	169,8	100	42,5	37,5	27,5	33 (M36)
SK 12.07	235	189,8	100	44,5	39,5	29,5	33 (M36)
SK 13.07	275	229,8	100	56,5	51,5	36,5	52 (M48)
SK 14.07	275	229,8	100	56,5	51,5	36,5	52 (M48)
SK 15.07	295	ø 249,8	100	56,5	51,5	36,5	52 (M48)

F - Low Output Flange

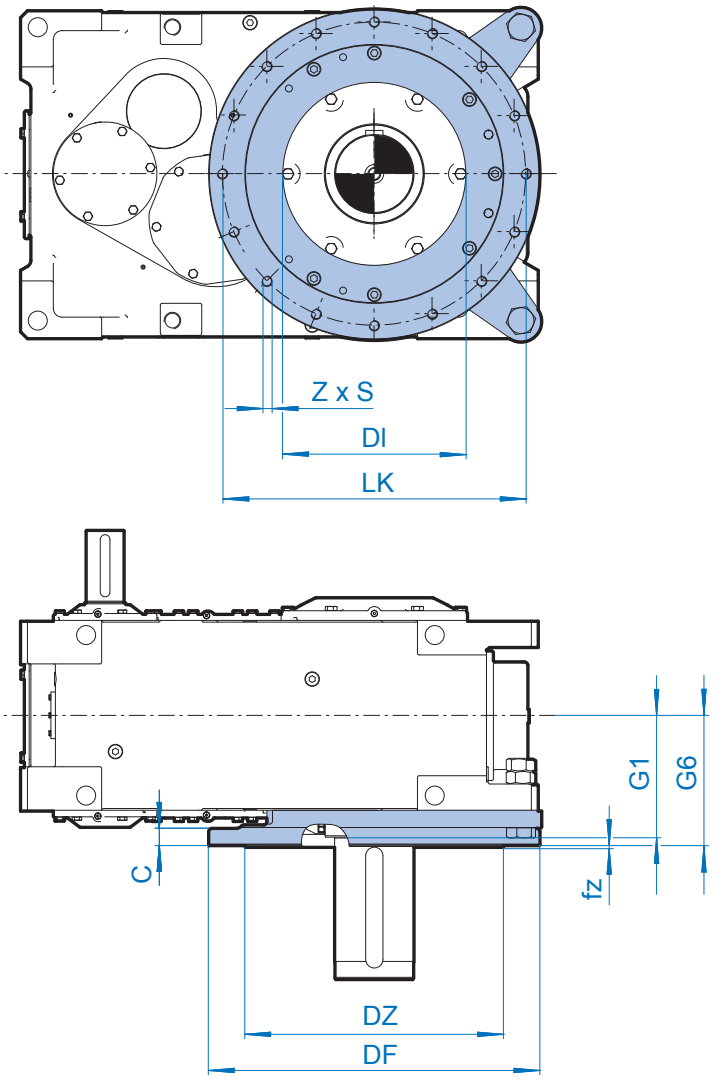

	ø DF	G1	G6	ø LK	ø DZ	ø DI	c	fz	z	s
SK 5.07	450	192,5	234,5	400	350	250	22	5	8	M16
SK 6.07	450	192,5	234,5	400	350	250	22	5	8	M16
SK 7.07	550	197	237	500	450	308	28	5	8	M16
SK 8.07	550	197	237	500	450	308	28	5	8	M16
SK 9.07	660	253	297,5	600	550	434	35	8	8	M24
SK 10.07	660	253	297,5	600	550	434	35	8	8	M24
SK 11.07	730	280	300	680	580	420	40	5	12	M24
SK 12.07	840	315	304	760	650	470	50	5	12	M30
SK 13.07	960	353	375	880	750	530	50	5	16	M30
SK 14.07	960	383	405	880	750	530	50	5	16	M30
SK 15.07	1100	395	435	980	900	600	60	10	16	M36

FK - High Output Flange

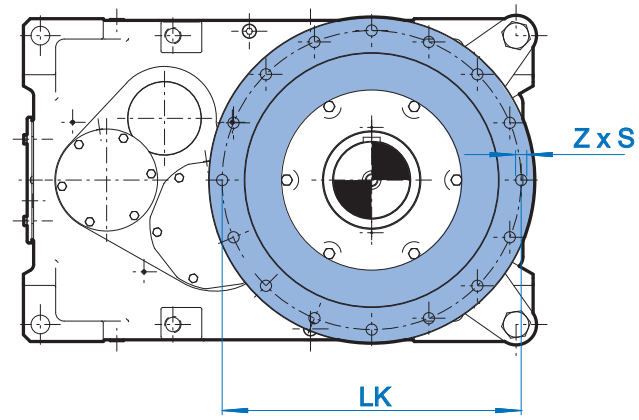

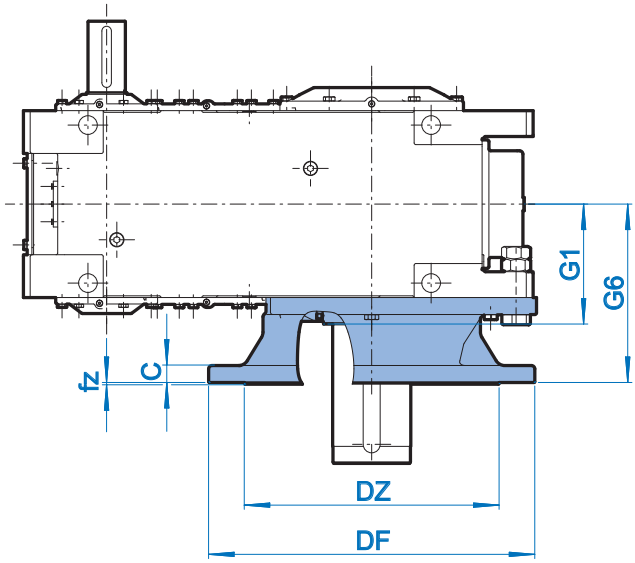

	ø DF	G1	G6	ø LK	ø DZ	ø DI	c	fz	z	ø s
SK 5.07	450	192,5	234,5	400	350	250	22	5	8	17,5
SK 6.07	450	192,5	234,5	400	350	259	22	5	8	17,5
SK 7.07	550	197	237	500	450	308	28	5	8	17,5
SK 8.07	550	197	237	500	450	308	28	5	8	17,5
SK 9.07	660	253	297,5	600	550	434	35	8	8	26
SK 10.07	660	253	297,5	600	550	434	35	8	8	26
SK 11.07	730	280	420	680	560	420	40	5	12	26
SK 12.07	840	315	470	760	650	470	50	5	12	33
SK 13.07	960	353	525	880	750	530	50	5	16	33
SK 14.07	---	---	---	---	---	---	---	---	---	---
SK 15.07	---	---	---	---	---	---	---	---	---	---

FVL2/FVL3/FVL4 - Agitator & Drywell Flange

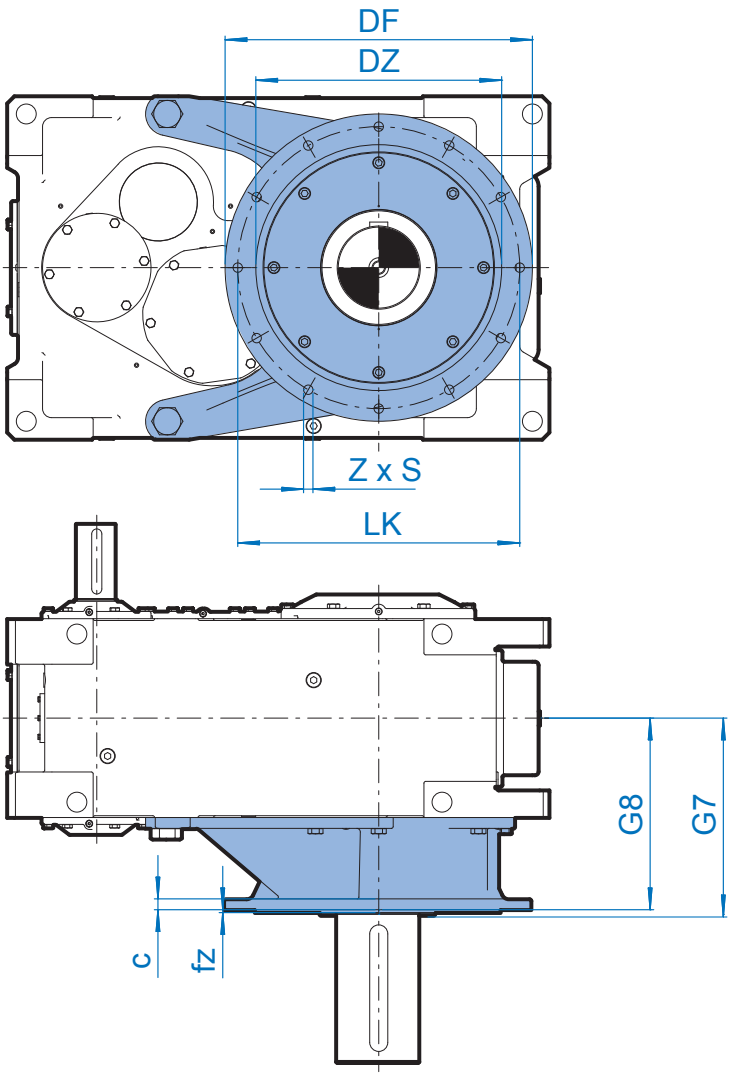

	G7	G8	ø DF	ø DZ	ø LK	fz	c	z	s
SK 5.07	401,5	396,5	550	450	500	5	29,5	8	17,5
SK 6.07	401,5	396,5	550	450	500	5	29,5	8	17,5
SK 7.07	485	477	660	550	600	6	28,5	8	22
SK 8.07	485	477	660	550	600	6	28,5	8	22
SK 9.07	517,5	509,5	660	550	600	8	35	8	26
SK 10.07	517,5	509,5	660	550	600	8	35	8	26
SK 11.07	450	440	675	540	620	5	40	10	22
	465	455	760	600	700	5	50	12	22
SK 12.07	485	470	760	600	700	5	50	12	22
SK 13.07	543	530	850	680	780	5	50	12	26
SK 14.07	575	560	850	680	780	5	50	12	26
SK 15.07	645	630	1000	800	930	8	60	16	33

VL6 - Agitator Without Flange

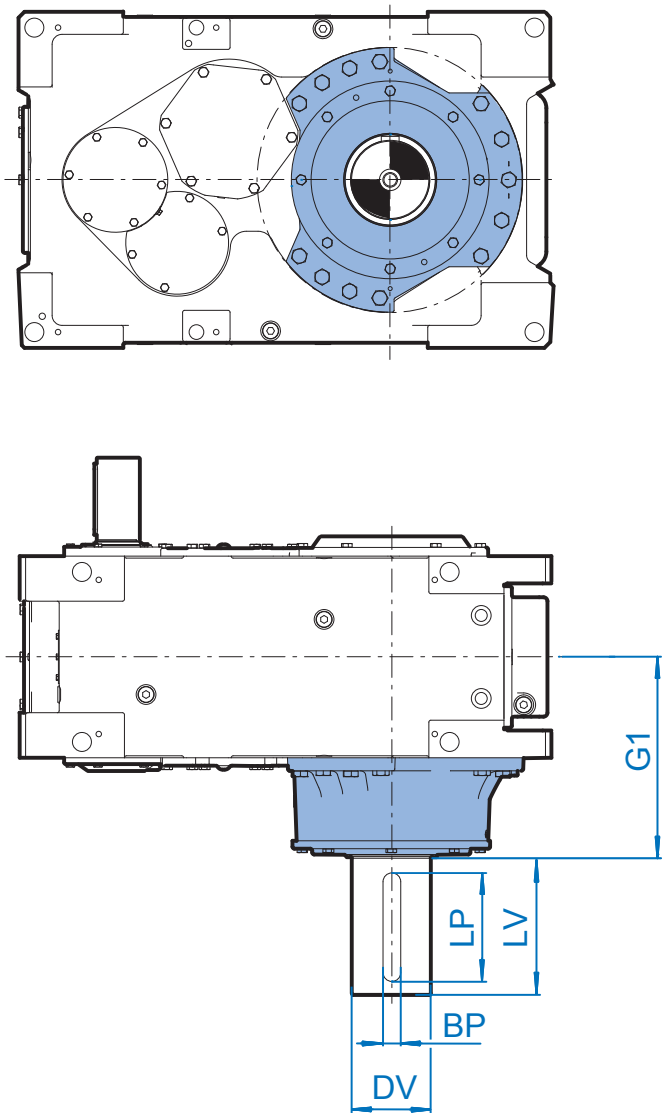

	G1	LV	ø DV	LP	BP
SK 5.07	401,5	210	120	180	32
SK 6.07	401,5	210	120	180	32
SK 7.07	485	250	140	200	36
SK 8.07	485	250	140	200	36
SK 9.07	517,5	300	160	260	40
SK 10.07	517,5	300	160	260	40
SK 11.07	450	300	170	260	40
SK 12.07	505	350	200	300	45
SK 13.07	542	410	230	350	50
SK 14.07	572	410	250	360	56
SK 15.07	645	410	250	360	56





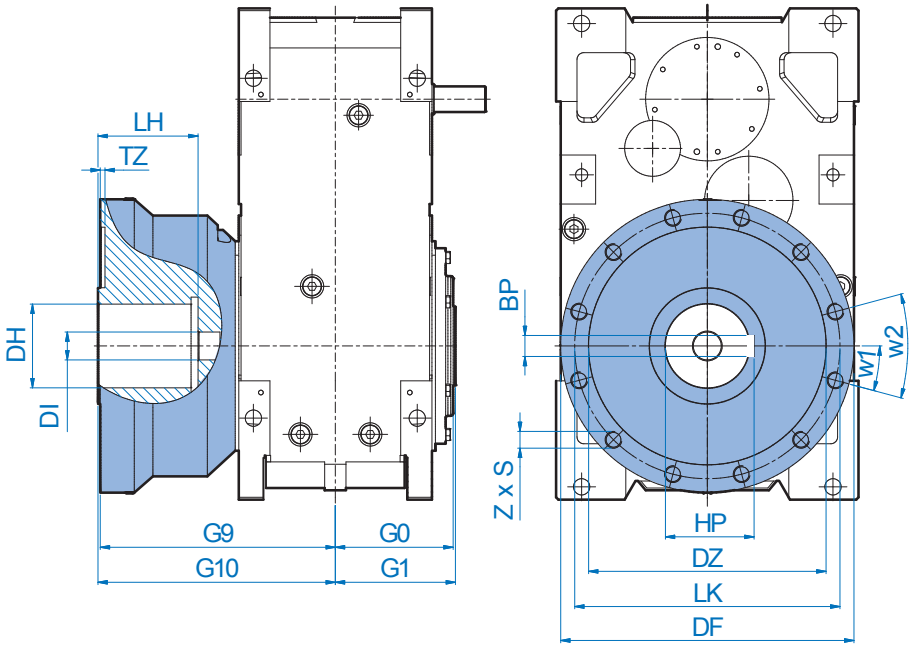

	Bearing type APRL	BP	DF	DH	DI	DZ	G0	G1	G9	G10	HP	LH	LK	Z	S	TZ	w1	w2
SK 5.07 SK 6.07	29 432	28	470	100	60	390	207,5	212,5	408,5	413,5	106,4	170	430	8	M30x50	10	22,5	45
	29 436	32	470	120	60	390	207,5	212,5	408,5	413,5	127,4	170	430	8	M30x50	10	22,5	45
SK 7.07 SK 8.07	29 436	32	560	120	60	460	210	215	450	455	127,4	215	510	12	M36x58	10	15	30
	29 440	32	560	130	60	460	210	215	450	455	137,4	215	510	12	M36x58	10	15	30
	29 444	36	560	150	60	460	210	215	450	455	158,4	215	510	12	M36x58	10	15	30
SK 9.07 SK10..07	29 440	32	560	130	60	460	253	258	482,5	487,5	137,4	215	510	12	M36x58	10	15	30
	29 444	36	560	150	60	460	253	258	482,5	487,5	158,4	215	570	12	M36x58	10	15	30
	29 452	45	630	180	60	510	253	258	505	510	190,4	215	570	12	M36x58	10	15	30
SK 11..y07	29 452	45	630	180	60	510	268	273	510	515	190,4	215	570	12	M36x58	10	15	30
	29 456	45	680	200	60	550	268	273	528	533	210,4	300	615	12	M36x58	10	15	30

F1 - Input Flange

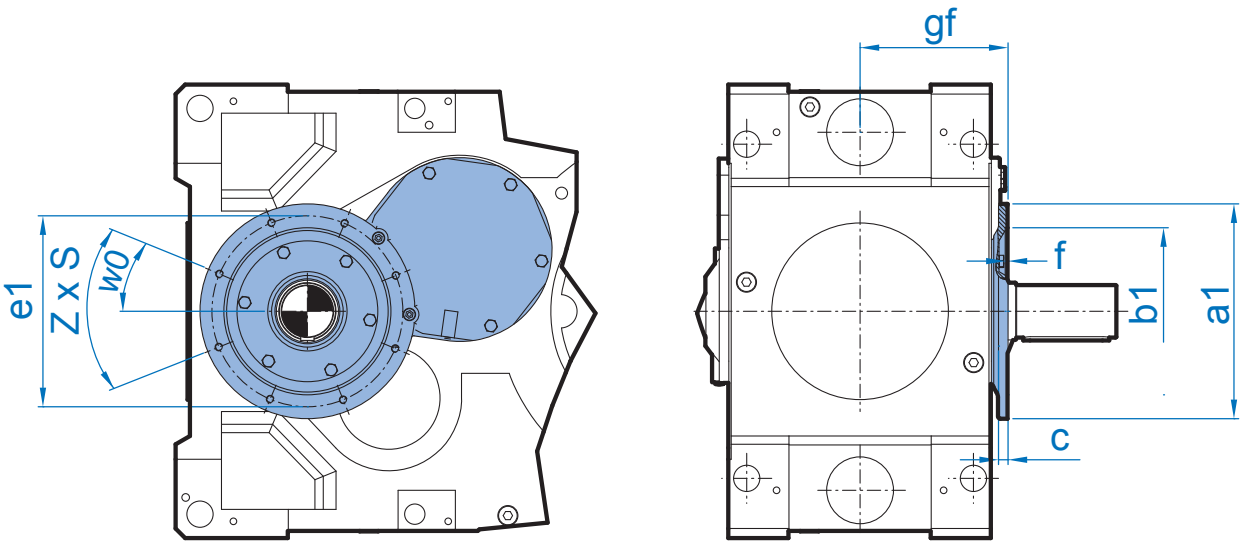

	gf	ø a1	ø b1	ø e1	c	f	w0°	z x s
SK 5..07	200,5	300	230	265	20	6	22,5	8 x M12
SK 6..07	200,5	300	230	265	20	6	22,5	8 x M12
SK 7..07	203,5	350	250	300	20	6	22,5	8 x M16
SK 8..07	203,5	350	250	300	20	6	22,5	8 x M16
SK 9..07	236	350	250	300	20	6	22,5	8 x M16
SK 10..07	236	350	250	300	20	6	22,5	8 x M16
SK 11..07	255	450	350	400	20	6,5	22,5 / 27,5	8 x M16
SK 12..07	290	550	450	500	25	6,5	21,5	8 x M16
SK 13..07	315	550	450	500	25	6,5	23	8 x M16
SK 14..07	345	550	450	500	25	6,5	23	8 x M16
SK 15..07	370	550	450	500	25	6,5	24	8 x M16

R - Backstop

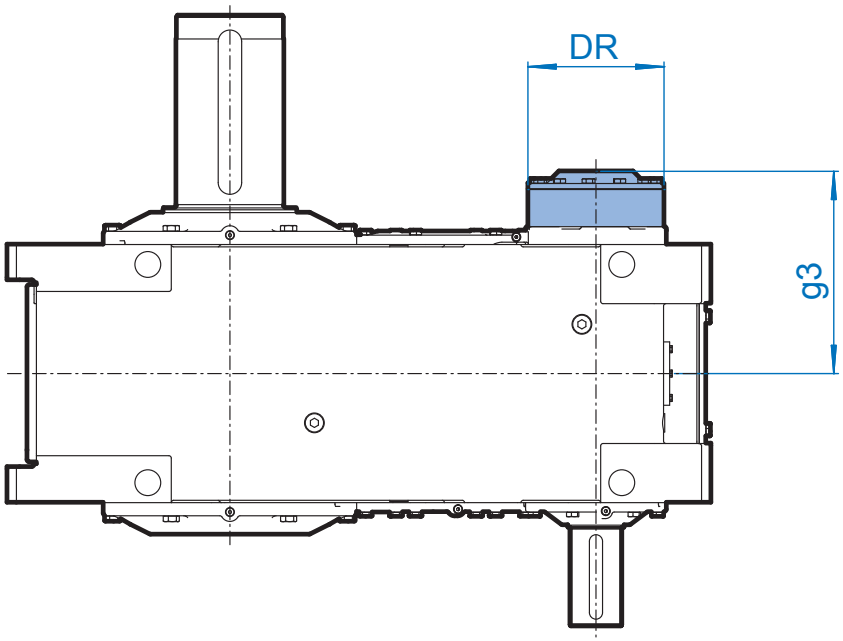

	i_N - Ratio	ø DR	g3
SK 5207	18 - 100	175	283
SK 5307	102 - 400	140	265,5
SK 6207	20 - 112	175	283
SK 6307	125 - 450	140	265,5
SK 7207	7,1 - 25	190	295
SK 7307	28,0 - 355	175	288
SK 8207	8,0 - 28	190	295
SK 8307	31,5 - 400	175	288
SK 9207	7,1 - 25	210	329,5
SK 9307	28,0 - 355	190	326,5
SK 10207	8,0 - 28	210	329,5
SK 10307	28,0 - 280	190	326,5
SK 11207	5,6 - 20	245	360
SK 11307	31,5 - 112	190	340
	22,4 - 28	210	350
SK 12207	5,6 - 20	290	415
SK 12307	22,4 - 112	210	385
SK 13207	5,6 - 20	290	431
SK 13307	22,4 - 112	210	410
SK 14207	7,1 - 25	310	470
SK 14307	28,0 - 140	210	445
SK 15207	5,6 - 20	400	510
SK 15307	22,4 - 112	290	485

FAN - Fan

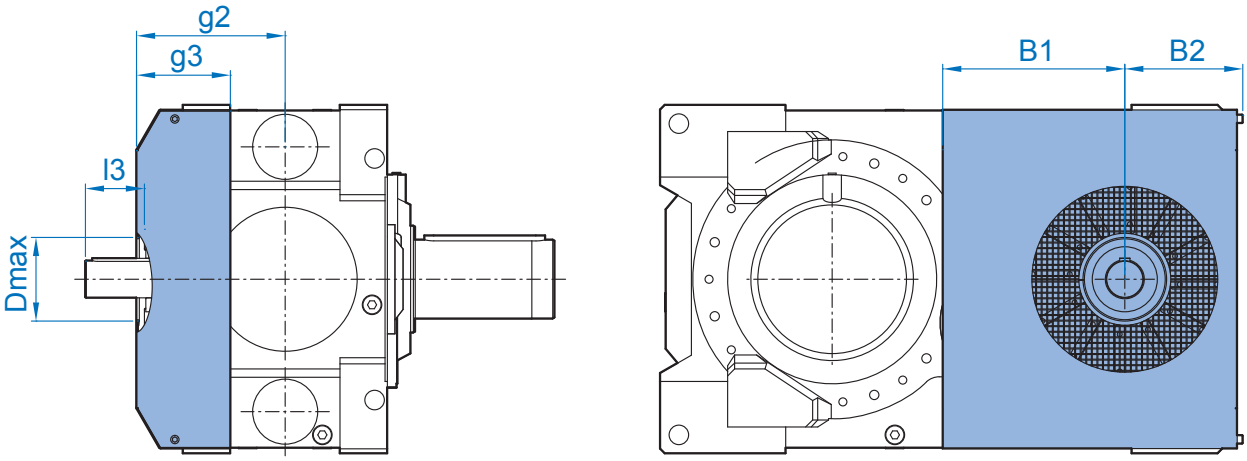

	i_N - Ratio	B1	B2	g2	g3	l3	ø Dmax
SK 5207	7,1 - 25	175	145	145	80	78	110 (180)
SK 5307	28,0 - 355	175	145	145	80	78	110 (180)
SK 6207	8,0 - 28	175	145	145	80	78	110 (180)
SK 6307	31,5 - 400	175	145	145	80	78	110 (180)
SK 7207	7,1 - 25	150	147	225	120	74	130
SK 7307	28,0 - 355	150	147	225	120	74	130
SK 8207	8,0 - 28	150	147	257,5	120	74	130
SK 8307	31,5 - 400	150	147	257,5	120	74	130
SK 9207	7,1 - 25	195	195	283	132	83	130
SK 9307	28,0 - 355	195	195	283	132	83	130
SK 10207	8,0 - 28	195	195	338	132	83	130
SK 10307	28,0 - 280	195	195	338	132	83	130
SK 11207	5,6 - 20	390	252	307	189	133	160
SK 11307	22,4 - 112	390	252	307	189	103	160
SK 12207	5,6 - 20	430	287	358	217	158	180
SK 12307	22,4 - 112	430	287	358	217	118	180
SK 13207	5,6 - 20	490	317	392	243	158	200
SK 13307	22,4 - 112	490	317	392	243	118	200
SK 14207	7,1 - 25	320	310	433	150	158	200
SK 14307	28,0 - 140	320	310	433	150	118	200
SK 15207	5,6 - 20	580	362	450	275	178	240
SK 15307	22,4 - 45	580	362	450	275	173	240
	50,0 - 112	580	362	450	275	103	240





D - Torque Support

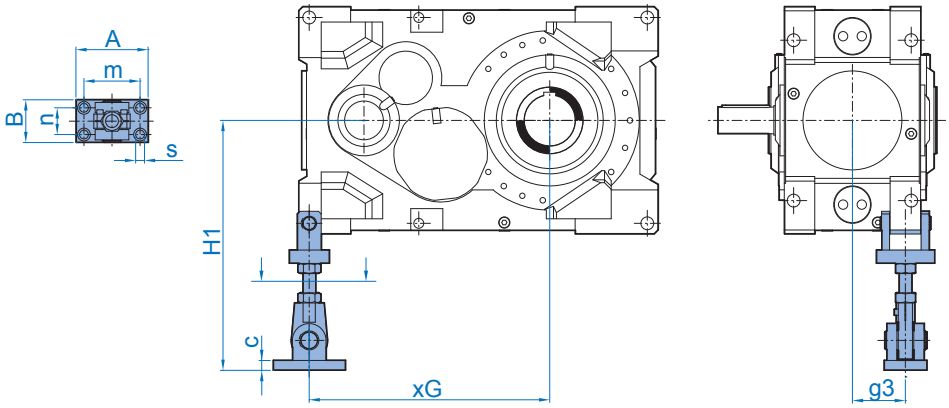

	H1max	H1min	xG	g3	c	A	B	m	n	s
SK 5.07	615	595	475	149	19	200	160	120	160	17,5
SK 6.07	615	595	500	149	19	200	160	120	160	17,5
SK 7.07	645	625	550	150,5	19	200	160	120	160	17,5
SK 8.07	685	665	575	150,5	19	200	160	120	160	17,5
SK 9.07	715	675	692,5	174	19	200	160	120	160	17,5
SK 10.07	765	725	722,5	174	19	200	160	120	160	17,5
SK 11.07	865	825	800	165	29	240	220	180	160	22
SK 12.07	935	895	900	195	29	290	250	220	180	26
SK 13.07	990	950	1005	210	29	290	250	220	180	26
SK 14.07	1080	1050	1060	240	39	330	300	250	220	33
SK 15.07	1120	1080	1200	247,5	39	330	300	250	220	33

ED - Elastic Torque Support

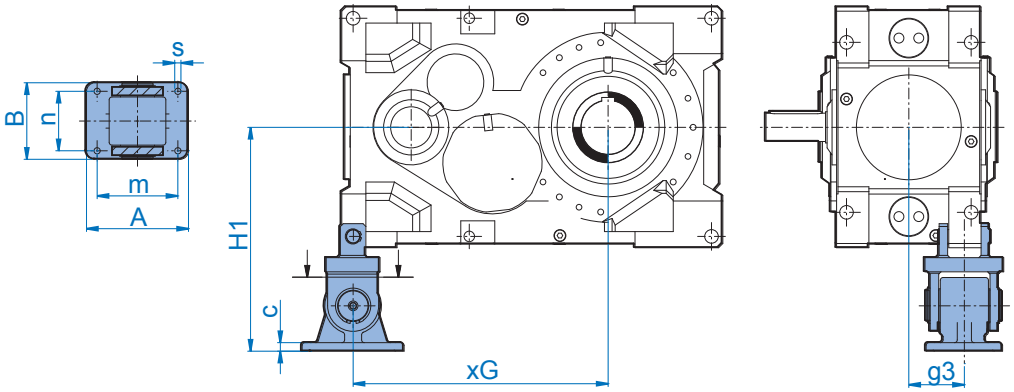

	H1	xG	g3	c	A	B	m	n	s
SK 5..07	460	475	149	21	200	160	160	120	17
SK 6..07	460	500	149	21	200	160	160	120	17
SK 7..07	490	550	150,5	21	200	160	160	120	17
SK 8..07	530	575	150,5	21	200	160	160	120	17
SK 9..07	655	692,5	174	25	260	200	190	140	22
SK 10..07	705	722,5	174	25	260	200	190	140	22
SK 11..07	740	800	167,5	30	360	270	285	210	22
SK 12..07	790	900	196	30	360	270	285	210	22
SK 13..07	890	1005	210	40	400	320	310	230	33
SK 14..07	940	1060	240	40	400	320	310	230	33
SK 15..07	980	1200	245,5	40	400	320	310	230	33

WX - Auxillary Drive

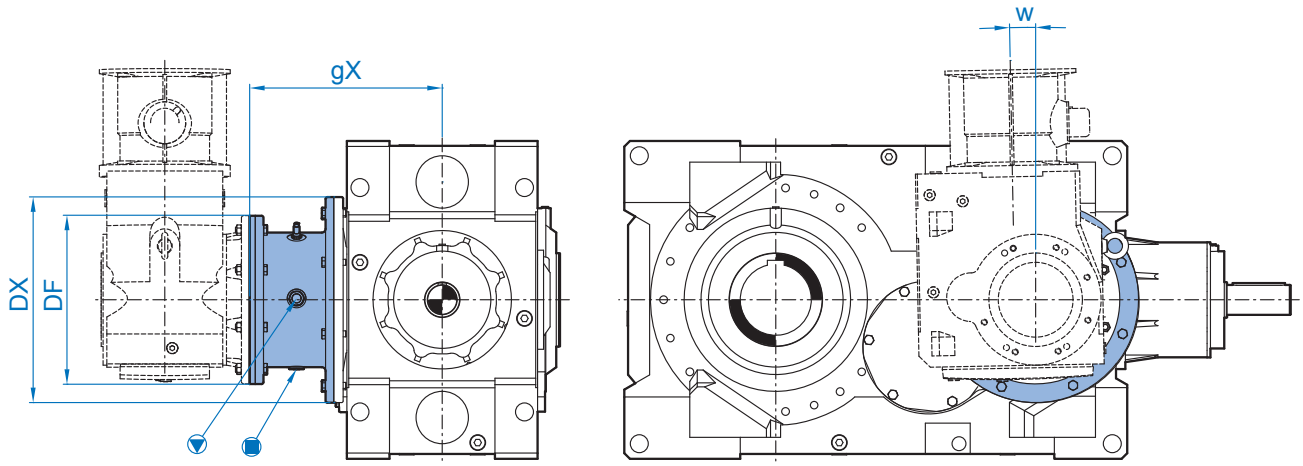

		ø DX	ø DF	gX	w
SK 5..07	SK 9022.1 VF	300	250	345,5	0°
	SK 9032.1 VF	300	250	345,5	0°
SK 6..07	SK 9022.1 VF	300	250	345,5	0°
	SK 9032.1 VF	300	250	345,5	0°
SK 7..07	SK 9022.1 VF	350	250	371,5	0°
	SK 9042.1 VF	350	350	371,5	0°
SK 8..07	SK 9022.1 VF	350	250	371,5	0°
	SK 9042.1 VF	350	350	371,5	0°
SK 9..07	SK 9032.1 VF	350	250	404	0°
	SK 9042.1 VF	350	350	404	0°
SK 10..07	SK 9032.1 VF	350	250	404	0°
	SK 9042.1 VF	350	350	404	0°
SK 11..07	SK 9052.1 VF	450	450	465	0°
	SK 9072.1 VF	450	450	445	0°
SK 12..07	SK 9072.1 VF	550	450	545	0°
	SK 9082.1 VF	550	450	515	0°
SK 13..07	SK 9072.1 VF	550	450	565	0°
	SK 9082.1 VF	550	450	535	0°
SK 14..07	SK 9072.1 VF	550	450	595	0°
	SK 9082.1 VF	550	450	565	0°
SK 15..07	SK 9082.1 VF	550	550	655	0°
	SK 9092.1 VF	550	660	620	0°

CS1 - Water Cooler

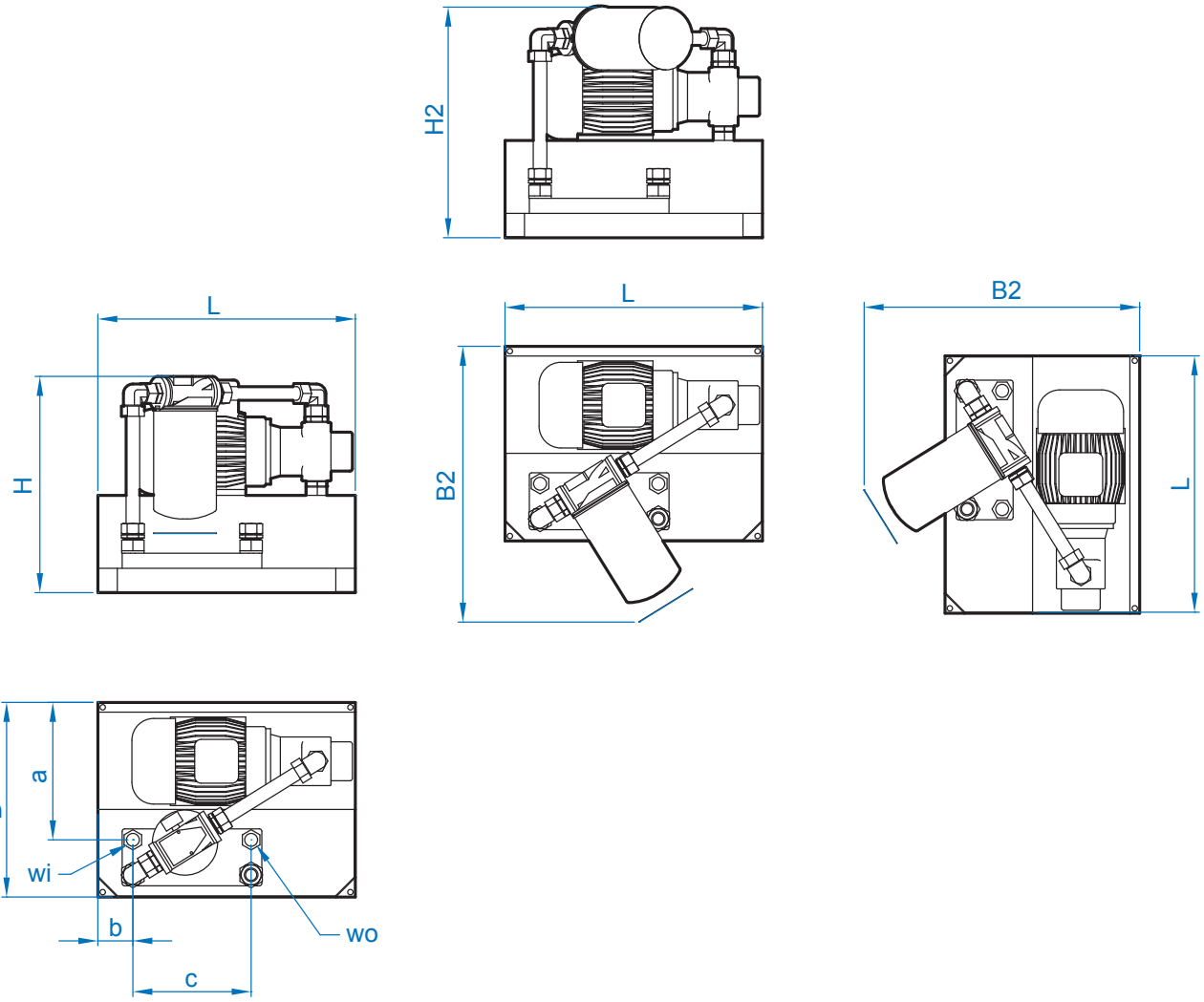

	L	B	B2	H	H2	a	b	c	wi	wo
A	480	420	500	400	430	250	80	278	G 1/2"	G 1/2"
B	520	394	530	431	450	287	175,5	234	G 3/4"	G 3/4"
C	520	394	530	431	450	287	175,5	234	G 3/4"	G 3/4"
D	530	450	570	450	480	282	70	243	G 3/4"	G 3/4"
E	530	450	570	450	480	282	70	243	G 3/4"	G 3/4"
F	530	450	570	450	480	282	70	243	G 3/4"	G 3/4"
G	600	550	650	500	530	340	50	320	G 1"	G 1"
H	600	550	650	500	530	340	50	320	G 1"	G 1"

CS2 - Air Cooler

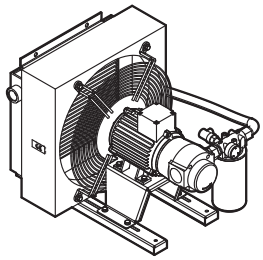

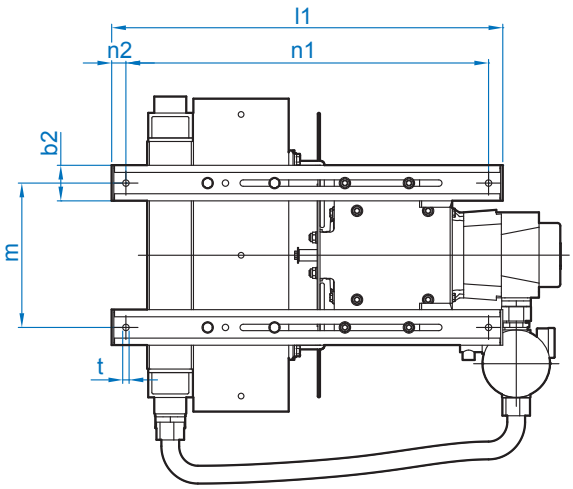

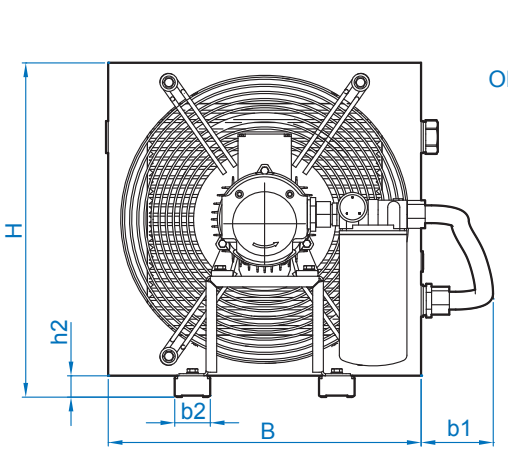

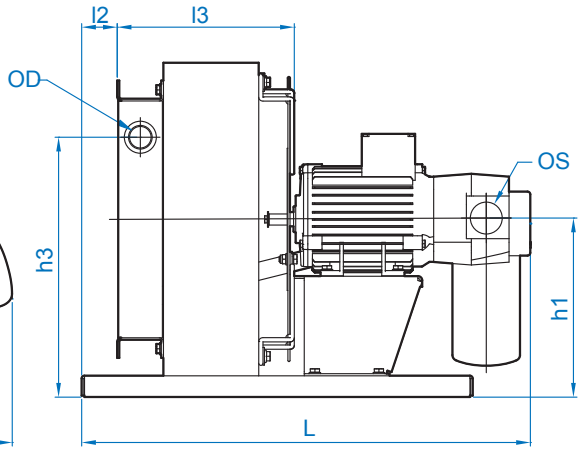

	L	l1	l2	l3	B	b1	b2	H	h1	h2	h3	n1	n2	m	t	os	od
A	755	560	43	173	330	137	30	355	185	15	330	525	15	160	Ø 9	G 3/4"	G 3/4"
B	793	560	43	190	380	137	30	500	235	15	429	525	15	290	Ø 9	G 3/4"	G 3/4"
C	793	560	43	190	380	137	30	500	235	15	429	525	15	290	Ø 9	G 3/4"	G 3/4"
D	932	680	37	229	485	134	30	567	270	20	490	640	20	425	Ø 8	G 1 1/2"	G 1"
E	932	680	37	229	485	134	30	567	270	20	490	640	20	425	Ø 8	G 1 1/2"	G 1"
F	932	680	37	229	485	134	30	567	270	20	490	640	20	425	Ø 8	G 1 1/2"	G 1"
G	1028	680	40	289	584	134	30	687	330	20	579	515	20	482	Ø 9	G 1 1/2"	G 1 1/4"
H	1142	870	42	289	706	119	50	806	408	55	707	830	20	560	Ø 12	G 1 1/2"	G 1 1/4"





CC - Internal Water Cooler (Cooling Coil)

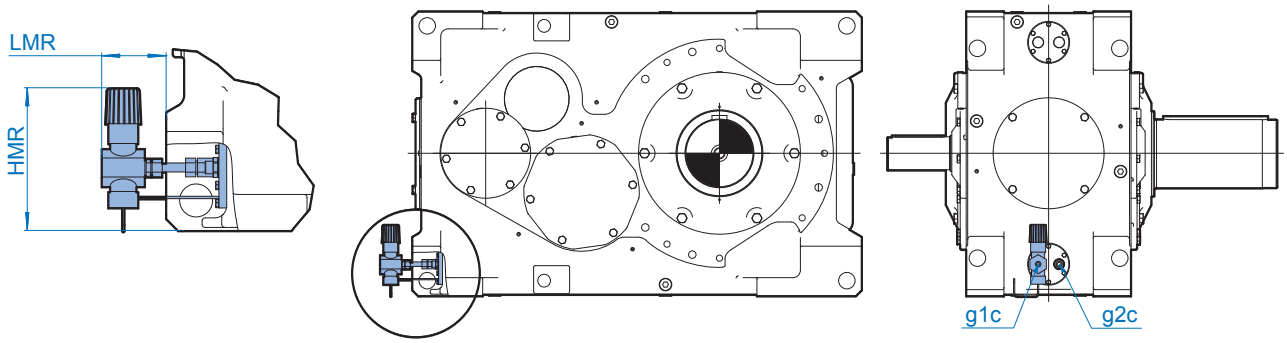

	g1c	g2c	HMR	LMR
SK 5.07	G 3/8"	G 3/8"	238	108
SK 6.07	G 3/8"	G 3/8"	238	108
SK 7.07	G 3/8"	G 3/8"	238	108
SK 8.07	G 3/8"	G 3/8"	238	108
SK 9.07	G 3/8"	G 3/8"	238	108
SK 10.07	G 3/8"	G 3/8"	238	108
SK 11.07	G 1/2"	G 1/2"	238	108
SK 12.07	G 1/2"	G 1/2"	238	108
SK 13.07	G 1/2"	G 1/2"	238	108
SK 14.07	G 1/2"	G 1/2"	238	108
SK 15.07	G 1/2"	G 1/2"	238	108

OH - Oil Heater

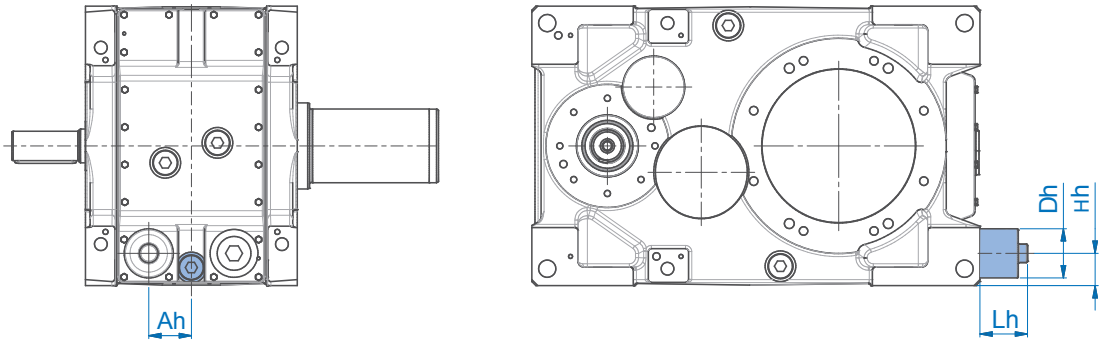

	Ah	ø Dh	Hh	Lh	340 W	380 W	470 W	590 W	760 W	870 W	1030 W	1410 W
SK 5.07	69,5	80	52,5	77,5	**M1/M3 ***							
SK 6.07	69,5	80	52,5	77,5	**M1/M3 ***							
SK 7.07	67,5	80	62,5	60		**M1/M3 ***						
SK 8.07	74	80	62,5	61,5		**M1/M3 ***						
SK 9.07	85	80	69,5	58			**M1/M3 ***					
SK 10.07	87,5	80	70	63,5			**M1/M3 ***					
SK 11.07	70	80	90	57				**M1**			**M3**	
SK 12.07	95	80	110	49				**M1**			**M3**	
SK 13.07	100	80	100	49					**M1**			**M3**
SK 14.07	100	80	95	39					**M1**			**M3**
SK 15.07	125	80	110	20						**M1**		**M3**

* For larger heating capacities, please contact NORD DRIVESYSTEMS. Other mounting configurations can often be used depending on the oil level with an oil heater. Please contact NORD DRIVESYSTEMS.

OT- Oil Tank

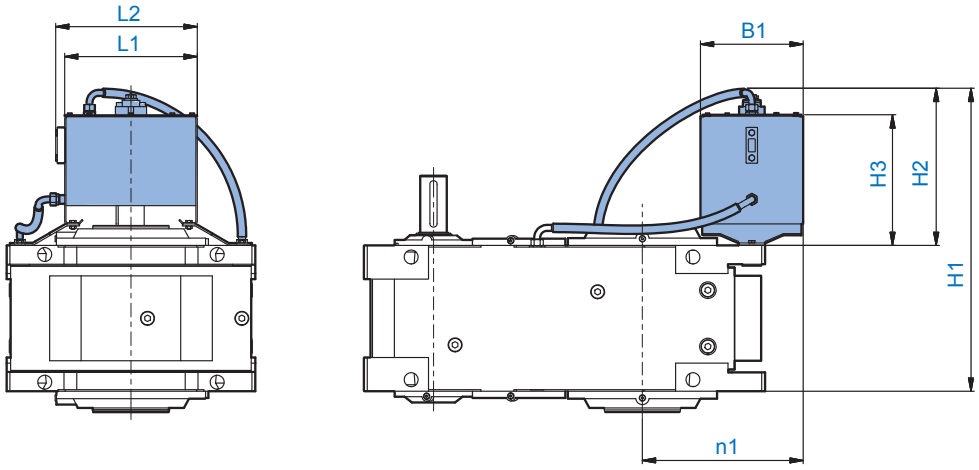

M5 / M6 Mounting	L1	L2	H1	H2	H3	n1	B1
SK 5.07	275	302	771,5	426,5	397,5	440	200
SK 6.07	275	302	771,5	426,5	397,5	440	200
SK 7.07	400	427	824,5	474,5	394,5	425	310
SK 8.07	400	427	858	508	428	455	310
SK 9.07	400	427	923	508	428	457,5	310
SK 10.07	400	427	879	464	384	490	310
SK 11.07	400	427	914	474	394	485	310
SK 12.07	400	427	979,5	469,5	389,5	520	310
SK 13.07	400	427	1069	519	439	580	310
SK 14.07	400	427	1133	523	443	610	310
SK 15.07	400	427	1156	506	426	645	310



DRIVESYSTEMS

Right-Angle Ratings

Ratings Tables Overview 176
Nominal Power Ratings 178
Nominal Output Torques 182
Moment of Inertia Values 183
Exact Ratios 184
Thermal Ratings - M1/M3 Mounting - 1000 rpm @ 20° C 186
Thermal Ratings - M1/M3 Mounting - 1000 rpm @ 40° C 188
Thermal Ratings - M1/M3 Mounting - 1200 rpm @ 20° C 190
Thermal Ratings - M1/M3 Mounting - 1200 rpm @ 40° C 192
Thermal Ratings - M1/M3 Mounting - 1500 rpm @ 20° C 194
Thermal Ratings - M1/M3 Mounting - 1500 rpm @ 40° C 196
Thermal Ratings - M1/M3 Mounting - 1800 rpm @ 20° C 198
Thermal Ratings - M1/M3 Mounting - 1800 rpm @ 40° C 200
Thermal Ratings - M5 Mounting - 1000 rpm @ 20° C 202
Thermal Ratings - M5 Mounting - 1000 rpm @ 40° C 204
Thermal Ratings - M5 Mounting - 1200 rpm @ 20° C 206
Thermal Ratings - M5 Mounting - 1200 rpm @ 40° C 208
Thermal Ratings - M5 Mounting - 1500 rpm @ 20° C 210
Thermal Ratings - M5 Mounting - 1500 rpm @ 40° C 212
Thermal Ratings - M5 Mounting - 1800 rpm @ 20° C 214
Thermal Ratings - M5 Mounting - 1800 rpm @ 40° C 216

Structure of the Power Ratings Tables

Nominal Input Speed
The actual motor speeds depend on the size of the motor, and may differ

Nominal Output Speed
The Nominal Input Speed divided by the Nominal Ratio

Size of Gear Unit

Nom. Ratio	Nominal Input Speed	Nominal Output Speed	SK 5407/ SK 5507	SK 6407/ SK 6507	SK 7407/ SK 7507	SK 8407/ SK 8507	SK 9407/ SK 9507	SK 10407/ SK 10507	SK 11407/ SK 11507	SK 12407/ SK 12507	SK 13407/ SK 13507	SK 14407/ SK 14507	SK 15407/ SK 15507
			Rated Power										
i_N	n_{1N} [rpm]	n_{2N} [rpm]	P_N [kW]	P_N [kW]	P_N [kW]	P_N [kW]	P_N [kW]	P_N [kW]	P_N [kW]	P_N [kW]	P_N [kW]	P_N [kW]	P_N [kW]
20	1000	50	80	102	132	144	207	215	372	546	745	929	1.069
	1500	75	120	153	197	216	310	323	558	818	1.117	1.393	1.604
	1200	60	96	123	158	173	248	258	447	655	894	1.115	1.283
	1800	90	144	184	237	260	373	387	670	982	1.340	1.672	1.925

Nominal Ratio
Sized according to Standard Series

Nominal Output Power
with Service Factor (f_B) = 1,0

Structure of the Torque Rating Tables

Size of Gear Unit

Nom. Ratio	SK 5407/ SK 5507	SK 6407/ SK 6507	SK 7407/ SK 7507	SK 8407/ SK 8507	SK 9407/ SK 9507	SK 10407/ SK 10507	SK 11407/ SK 11507	SK 12407/ SK 12507	SK 13407/ SK 13507	SK 14407/ SK 14507	SK 15407/ SK 15507
	Output Torque										
i_N	M_{2max} [kNm]	M_{2max} [kNm]	M_{2max} [kNm]	M_{2max} [kNm]	M_{2max} [kNm]	M_{2max} [kNm]	M_{2max} [kNm]	M_{2max} [kNm]	M_{2max} [kNm]	M_{2max} [kNm]	M_{2max} [kNm]
80	15	20	26	31	43	51	75	107	144	190	230
90	15	20	26	31	43	52	75	107	144	190	245

Nominal Ratio
Sized according to Standard Series

SK .407 Units
Units shaded this color are Three Stage Units

Nominal Output Torque
with Service Factor (f_B) = 1,0

SK .507 Units
Units shaded this color are Four Stage Units

Structure of the Inertia Tables

Size of Gear Unit

Nom. Ratio	SK 5407/ SK 5507	SK 6407/ SK 6507	SK 7407/ SK 7507	SK 8407/ SK 8507	SK 9407/ SK 9507	SK 10407/ SK 10507	SK 11407/ SK 11507	SK 12407/ SK 12507	SK 13407/ SK 13507	SK 14407/ SK 14507	SK 15407/ SK 15507
	Moments of Inertia										
i_N	j_1 kgm²	j_1 kgm²	j_1 kgm²	j_1 kgm²	j_1 kgm²	j_1 kgm²	j_1 kgm²	j_1 kgm²	j_1 kgm²	j_1 kgm²	j_1 kgm²
80	0,005	0,005	0,009	0,009	0,019	0,019	0,036	0,065	0,123	0,172	0,231
90	0,004	0,005	0,009	0,009	0,017	0,019	0,033	0,060	0,114	0,170	0,209

Nominal Ratio
Sized according to Standard Series

SK .407 Units
Units shaded this color are Three Stage Units

Moment of Inertia
Relative to the Input Shaft

SK .507 Units
Units shaded this color are Four Stage Units

Structure of the Exact Ratio Tables

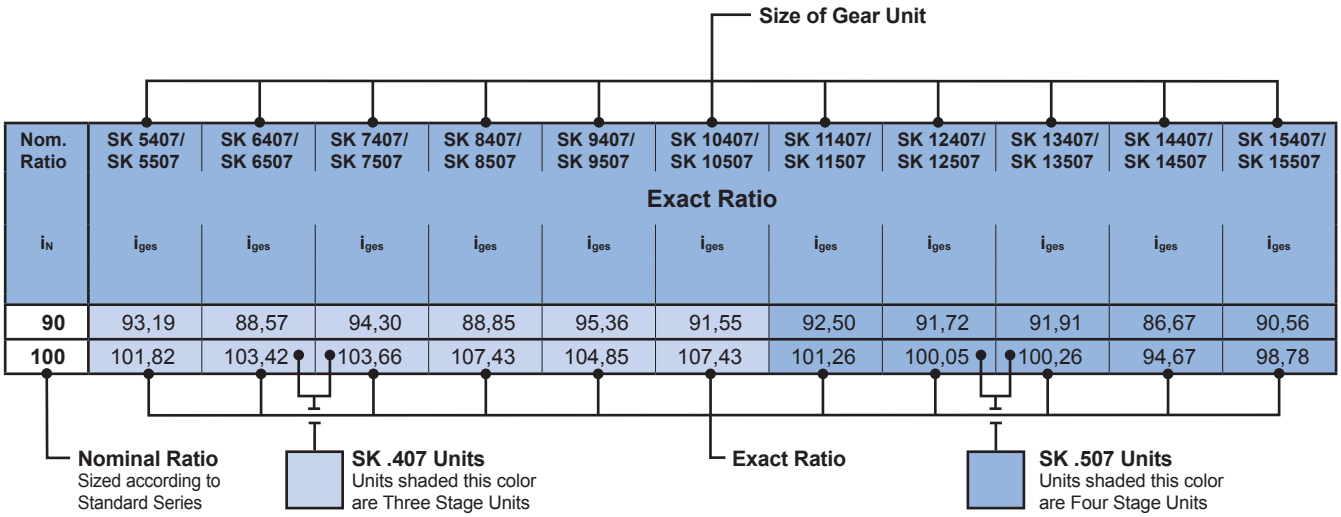

Structure of the Thermal Rating Tables

1) 2) (see explanation below)

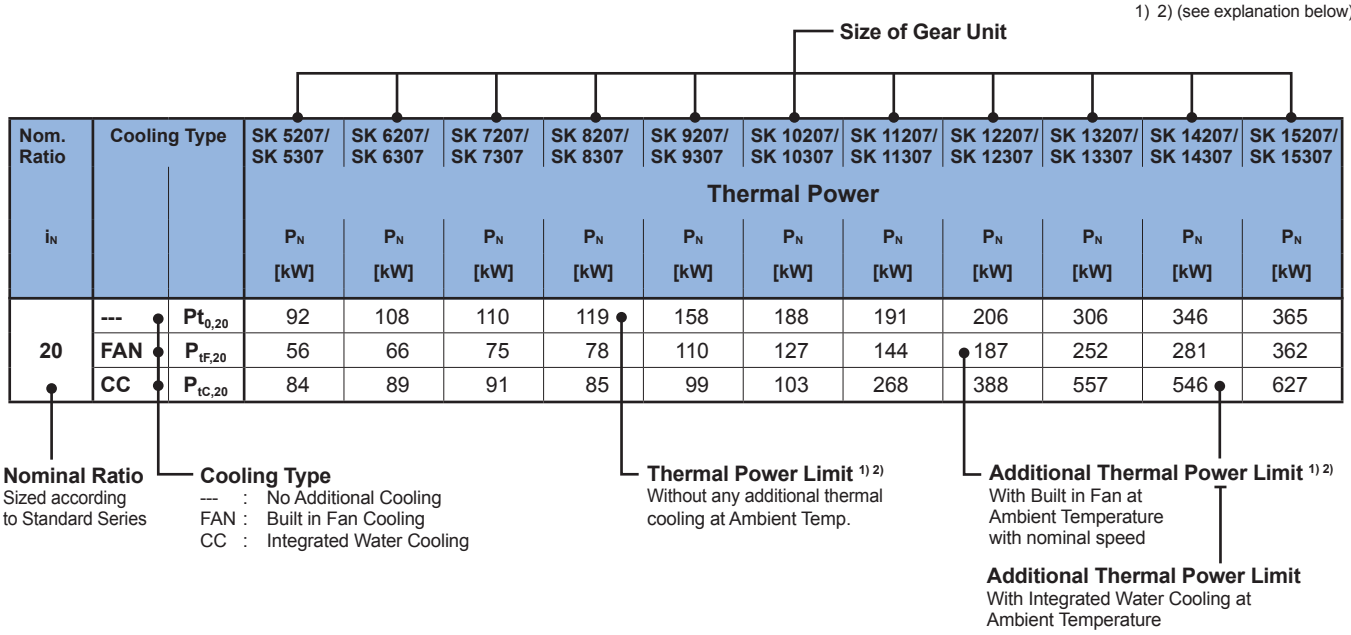

1) Standard ambient conditions

Ambient temperature:	20°C (68°F) or 40°C (104°F)
Air circulation at installation location	large hall with good air circulation (v_L = 4,92 ft/s or 1,5 m/s)
Installation:	Foundation steel sub-construction
Installation altitude:	≤ 1000 m (3280 ft) above sea level
Installation position	Horizontal installation (M1 for 3-stage or M3 for 4 stage)
Type of lubrication:	Immersion lubrication Oel splash lubrication with PAO VG 220
Cooling water inlet temperature	20°C (68°F) or 40°C (104°F)

2) For ratings at different temperatures please contact NORD DRIVESYSTEMS.

Nominal Power Ratings

Nom. Ratio	Nominal Input Speed	Nominal Output Speed	SK 5407/ SK 5507	SK 6407/ SK 6507	SK 7407/ SK 7507	SK 8407/ SK 8507	SK 9407/ SK 9507	SK 10407/ SK 10507	SK 11407/ SK 11507	SK 12407/ SK 12507	SK 13407/ SK 13507	SK 14407/ SK 14507	SK 15407/ SK 15507
			Rated Power										
i_N	n_{1N} [rpm]	n_{2N} [rpm]	P_N [kW]	P_N [kW]	P_N [kW]	P_N [kW]	P_N [kW]	P_N [kW]	P_N [kW]	P_N [kW]	P_N [kW]	P_N [kW]	P_N [kW]
12,5	1000	80	---	---	---	---	---	---	511	711	843	---	1.196
	1500	120	---	---	---	---	---	---	767	1.067	1.265	---	1.793
	1200	96	---	---	---	---	---	---	614	854	1.012	---	1.435
	1800	144	---	---	---	---	---	---	921	1.280	1.518	---	2.152
14	1000	71	---	---	---	---	---	---	510	708	847	926	1.195
	1500	107	---	---	---	---	---	---	766	1.063	1.270	1.390	1.792
	1200	86	---	---	---	---	---	---	612	850	1.016	1.112	1.434
	1800	129	---	---	---	---	---	---	919	1.275	1.524	1.667	2.151
16	1000	63	---	---	---	---	---	---	449	641	844	935	1.177
	1500	94	---	---	---	---	---	---	673	962	1.266	1.402	1.766
	1200	75	---	---	---	---	---	---	538	770	1.013	1.122	1.413
	1800	113	---	---	---	---	---	---	807	1.154	1.520	1.683	2.119
18	1000	56	87	---	143	---	214	---	421	611	840	914	1.163
	1500	83	131	---	215	---	321	---	632	917	1.260	1.371	1.744
	1200	67	105	---	172	---	257	---	506	734	1.008	1.096	1.395
	1800	100	157	---	258	---	385	---	759	1.101	1.512	1.645	2.093
20	1000	50	80	102	132	144	207	215	372	546	745	929	1.069
	1500	75	120	153	197	216	310	323	558	818	1.117	1.393	1.604
	1200	60	96	123	158	173	248	258	447	655	894	1.115	1.283
	1800	90	144	184	237	260	373	387	670	982	1.340	1.672	1.925
22,4	1000	45	72	95	117	142	187	214	342	505	695	889	1.023
	1500	67	108	143	176	213	281	321	513	757	1.042	1.333	1.535
	1200	54	86	114	140	170	225	257	411	606	834	1.067	1.228
	1800	80	129	171	211	255	337	385	616	909	1.250	1.600	1.842
25	1000	40	66	86	106	120	171	195	296	434	588	846	896
	1500	60	99	130	158	180	257	293	443	651	882	1.269	1.343
	1200	48	79	104	127	144	206	235	355	521	705	1.015	1.075
	1800	72	118	155	190	216	309	352	532	781	1.058	1.523	1.612
28	1000	36	54	78	90	115	147	179	270	398	540	729	827
	1500	54	80	118	135	172	220	268	406	597	810	1.093	1.240
	1200	43	64	94	108	138	176	215	324	477	648	875	992
	1800	64	96	141	163	206	264	322	487	716	972	1.312	1.488
31,5	1000	32	49	64	83	95	134	153	245	358	470	676	746
	1500	48	74	97	124	143	201	230	368	537	705	1.013	1.119
	1200	38	59	77	99	114	161	184	294	429	564	811	895
	1800	57	88	116	149	171	242	276	441	644	845	1.216	1.342

Nom. Ratio	Nominal Input Speed	Nominal Output Speed	SK 5407/ SK 5507	SK 6407/ SK 6507	SK 7407/ SK 7507	SK 8407/ SK 8507	SK 9407/ SK 9507	SK 10407/ SK 10507	SK 11407/ SK 11507	SK 12407/ SK 12507	SK 13407/ SK 13507	SK 14407/ SK 14507	SK 15407/ SK 15507
			Rated Power										
i_N	n_{1N} [rpm]	n_{2N} [rpm]	P_N [kW]	P_N [kW]	P_N [kW]	P_N [kW]	P_N [kW]	P_N [kW]	P_N [kW]	P_N [kW]	P_N [kW]	P_N [kW]	P_N [kW]
35,5	1000	28	44	58	73	90	118	142	224	328	441	565	684
	1500	42	66	88	109	135	177	212	337	492	662	847	1.025
	1200	34	53	70	87	108	141	170	269	394	530	677	820
	1800	51	79	105	131	162	212	255	404	590	795	1.016	1.230
40	1000	25	40	53	66	76	108	124	194	281	373	523	584
	1500	38	61	80	100	114	162	186	291	421	559	785	877
	1200	30	48	64	80	91	129	149	232	337	447	628	701
	1800	45	73	95	120	137	194	223	349	505	671	942	1.052
45	1000	22	35	48	58	72	94	115	177	257	342	483	536
	1500	33	53	72	87	107	141	172	266	386	513	724	804
	1200	27	42	58	70	86	113	137	213	309	411	579	643
	1800	40	63	87	105	129	170	206	319	463	616	869	964
50	1000	20	32	42	53	61	86	100	153	220	296	403	458
	1500	30	48	63	80	91	129	150	229	329	444	605	687
	1200	24	38	50	64	73	103	120	183	264	355	484	549
	1800	36	58	76	95	110	155	181	275	395	533	726	824
56	1000	18	27	38	46	58	75	93	140	201	272	374	420
	1500	27	41	57	69	87	112	139	209	302	408	561	629
	1200	21	33	46	55	70	89	111	168	242	326	449	504
	1800	32	49	69	83	104	134	167	251	362	489	673	755
63	1000	16	25	33	42	49	68	80	120	172	230	320	359
	1500	24	38	49	63	73	102	120	179	258	345	480	538
	1200	19	30	39	51	58	82	96	143	207	276	384	431
	1800	29	45	59	76	87	123	144	215	310	414	576	646
71	1000	14	22	30	37	46	60	74	109	158	211	296	336
	1500	21	33	45	56	69	90	111	164	237	317	445	505
	1200	17	26	36	45	55	72	89	131	190	253	356	404
	1800	25	39	54	67	83	107	133	197	284	380	533	605
80	1000	13	20	26	34	39	55	64	99	143	194	248	311
	1500	19	30	39	51	58	82	97	149	214	290	372	467
	1200	15	24	31	41	46	66	77	119	171	232	297	373
	1800	23	36	47	62	70	98	116	179	257	349	446	560
90	1000	11	17	24	29	37	47	59	85	122	164	230	283
	1500	17	25	35	44	55	70	89	128	183	246	344	425
	1200	13	20	28	35	44	56	71	102	147	197	275	340
	1800	20	30	43	53	66	85	106	153	220	295	413	510

Nominal Power Ratings

Nom. Ratio	Nominal Input Speed	Nominal Output Speed	SK 5407/ SK 5507	SK 6407/ SK 6507	SK 7407/ SK 7507	SK 8407/ SK 8507	SK 9407/ SK 9507	SK 10407/ SK 10507	SK 11407/ SK 11507	SK 12407/ SK 12507	SK 13407/ SK 13507	SK 14407/ SK 14507	SK 15407/ SK 15507
			Rated Power										
i_N	n_{1N} [rpm]	n_{2N} [rpm]	P_N [kW]	P_N [kW]	P_N [kW]	P_N [kW]	P_N [kW]	P_N [kW]	P_N [kW]	P_N [kW]	P_N [kW]	P_N [kW]	P_N [kW]
100	1000	10	15	20	27	30	43	51	78	112	150	210	270
	1500	15	23	30	40	45	64	76	117	168	226	315	405
	1200	12	19	24	32	36	52	61	93	134	180	252	324
	1800	18	28	36	48	55	77	91	140	202	271	378	487
112	1000	9	13	---	24	29	39	47	70	99	133	176	244
	1500	13	20	---	37	43	58	70	105	149	200	263	366
	1200	11	16	---	29	34	47	56	84	119	160	211	293
	1800	16	24	---	44	52	70	84	126	179	240	316	439
125	1000	8	12	16	22	25	36	42	64	91	122	163	224
	1500	12	18	24	33	38	53	63	96	137	184	244	335
	1200	10	15	19	27	30	43	50	77	109	147	195	268
	1800	14	22	29	40	45	64	76	115	164	220	293	402
140	1000	7	11	15	19	23	30	38	55	78	104	143	191
	1500	11	16	22	28	35	45	57	82	117	155	214	287
	1200	9	13	18	23	28	36	46	66	93	124	171	229
	1800	13	19	26	34	42	54	68	98	140	186	257	344
160	1000	6	10	13	17	19	28	31	50	71	95	132	175
	1500	9	15	19	26	28	41	46	75	107	143	198	263
	1200	8	12	15	21	22	33	37	60	86	114	159	210
	1800	11	17	23	31	33	50	55	90	129	171	238	315
180	1000	6	8	12	14	18	25	28	45	63	85	111	154
	1500	8	13	17	21	26	38	43	67	95	128	166	230
	1200	7	10	14	17	21	30	34	53	76	102	133	184
	1800	10	15	21	25	32	45	51	80	114	153	199	276
200	1000	5	8	10	14	14	23	25	41	58	78	102	141
	1500	8	12	15	21	21	35	37	61	87	117	154	211
	1200	6	9	12	17	17	28	30	49	70	94	123	169
	1800	9	14	18	25	25	42	45	73	104	141	184	253

Nom. Ratio	Nominal Input Speed	Nominal Output Speed	SK 5407/ SK 5507	SK 6407/ SK 6507	SK 7407/ SK 7507	SK 8407/ SK 8507	SK 9407/ SK 9507	SK 10407/ SK 10507	SK 11407/ SK 11507	SK 12407/ SK 12507	SK 13407/ SK 13507	SK 14407/ SK 14507	SK 15407/ SK 15507
			Rated Power										
i_N	n_{1N} [rpm]	n_{2N} [rpm]	P_N [kW]	P_N [kW]	P_N [kW]	P_N [kW]	P_N [kW]	P_N [kW]	P_N [kW]	P_N [kW]	P_N [kW]	P_N [kW]	P_N [kW]
224	1000	4	7	9	12	14	21	24	35	50	66	91	120
	1500	7	10	14	19	20	31	37	52	74	99	136	180
	1200	5	8	11	15	16	25	29	42	59	79	109	144
	1800	8	12	17	22	24	37	44	63	89	119	163	217
250	1000	4	6	8	11	12	19	22	32	45	61	84	110
	1500	6	9	12	17	19	28	33	48	68	91	126	165
	1200	5	8	10	14	15	23	26	38	55	73	101	132
	1800	7	11	15	20	22	34	39	57	82	109	151	199
280	1000	4	5	7	10	12	16	20	28	39	53	70	96
	1500	5	8	11	14	18	24	30	41	58	80	105	144
	1200	4	6	9	12	14	19	24	33	47	64	84	115
	1800	6	10	13	17	21	29	36	50	70	96	127	173
315	1000	3	5	6	9	10	15	17	25	36	49	65	88
	1500	5	7	10	13	15	22	25	38	54	74	98	132
	1200	4	6	8	10	12	18	20	30	43	59	78	105
	1800	6	9	12	16	17	26	30	45	64	88	117	158
355	1000	3	4	6	8	9	13	15	22	31	41	57	75
	1500	4	6	9	12	14	20	23	32	46	62	85	113
	1200	3	5	7	9	11	16	18	26	37	50	68	90
	1800	5	8	11	14	16	24	27	39	55	75	102	135
400	1000	3	4	5	7	7	12	14	20	28	38	53	69
	1500	4	6	8	11	10	18	21	30	42	57	79	103
	1200	3	5	6	9	8	15	17	24	34	46	63	83
	1800	5	7	9	13	12	22	25	36	50	69	95	124
450	1000	3	---	5	---	7	---	13	---	---	---	---	---
	1500	4	---	7	---	10	---	19	---	---	---	---	---
	1200	3	---	6	---	8	---	15	---	---	---	---	---
	1800	5	---	8	---	12	---	23	---	---	---	---	---

Nominal Output Torques

Nom. Ratio	SK 5407/ SK 5507	SK 6407/ SK 6507	SK 7407/ SK 7507	SK 8407/ SK 8507	SK 9407/ SK 9507	SK 10407/ SK 10507	SK 11407/ SK 11507	SK 12407/ SK 12507	SK 13407/ SK 13507	SK 14407/ SK 14507	SK 15407/ SK 15507
	Output Torque										
i_N	M_{2max} [kNm]	M_{2max} [kNm]	M_{2max} [kNm]	M_{2max} [kNm]	M_{2max} [kNm]	M_{2max} [kNm]	M_{2max} [kNm]	M_{2max} [kNm]	M_{2max} [kNm]	M_{2max} [kNm]	M_{2max} [kNm]
12,5	---	---	---	---	---	---	62	87	105	---	144
14	---	---	---	---	---	---	68	95	115	124	157
16	---	---	---	---	---	---	70	100	129	135	181
18	15	---	24	---	36	---	72	104	140	155	195
20	15	20	24	27	38	41	72	106	142	170	204
22,4	15	20	25	29	40	45	73	107	145	185	213
25	15	20	25	29	40	47	74	107	145	190	218
28	15	20	25	29	40	47	74	107	145	190	219
31,5	15	20	25	29	41	48	74	107	139	190	220
35,5	15	20	25	30	41	48	74	107	143	190	220
40	15	20	25	30	41	49	75	107	142	190	220
45	15	20	25	30	41	49	75	107	143	190	220
50	15	20	25	30	42	50	75	107	143	190	220
56	15	20	26	30	42	50	75	107	143	190	220
63	15	20	26	31	42	51	75	107	143	190	220
71	15	20	26	31	42	51	75	107	143	190	225
80	15	20	26	31	43	51	75	107	144	190	230
90	15	20	26	31	43	52	75	107	144	190	245
100	15	20	26	31	43	52	75	107	144	190	255
112	15	20	27	31	43	52	75	107	144	190	260
125	15	20	27	31	43	53	75	107	144	190	260
140	15	20	27	30	44	52	76	107	144	190	260
160	15	20	27	30	44	50	76	107	145	190	260
180	15	20	24	30	44	51	76	107	145	190	260
200	15	20	27	27	44	49	76	107	145	190	260
224	15	20	27	29	45	53	76	107	145	190	260
250	15	20	27	30	45	53	76	107	145	190	260
280	15	20	27	31	45	53	76	107	145	190	260
315	15	20	27	31	45	53	76	107	145	190	260
355	15	20	27	31	46	53	76	107	146	190	260
400	15	20	27	27	46	53	76	107	146	190	260
450	---	20	---	28	---	53	---	---	---	---	---

SK ..407 Units

SK ..507 Units

Moments of Inertia

Nom. Ratio	SK 5407/ SK 5507	SK 6407/ SK 6507	SK 7407/ SK 7507	SK 8407/ SK 8507	SK 9407/ SK 9507	SK 10407/ SK 10507	SK 11407/ SK 11507	SK 12407/ SK 12507	SK 13407/ SK 13507	SK 14407/ SK 14507	SK 15407/ SK 15507
	Moments of Inertia										
i_N	j_1 kgm²	j_1 kgm²	j_1 kgm²	j_1 kgm²	j_1 kgm²	j_1 kgm²	j_1 kgm²	j_1 kgm²	j_1 kgm²	j_1 kgm²	j_1 kgm²
12,5	---	---	---	---	---	---	0,501	0,819	1,290	---	3,360
14	---	---	---	---	---	---	0,492	0,806	1,270	1,640	3,310
16	---	---	---	---	---	---	0,417	0,683	1,100	1,580	2,750
18	0,034	---	0,067	---	0,142	---	0,412	0,676	1,080	1,320	2,720
20	0,033	0,035	0,066	0,071	0,141	0,150	0,375	0,612	0,966	1,290	2,390
22,4	0,030	0,035	0,059	0,069	0,120	0,146	0,371	0,607	0,957	1,130	2,360
25	0,030	0,031	0,059	0,061	0,119	0,125	0,329	0,538	0,841	1,100	2,050
28	0,012	0,031	0,024	0,060	0,054	0,123	0,327	0,535	0,835	0,983	2,040
31,5	0,012	0,013	0,024	0,025	0,053	0,056	0,177	0,267	0,351	0,967	0,888
35,5	0,011	0,013	0,021	0,025	0,045	0,055	0,175	0,265	0,348	0,853	0,879
40	0,011	0,011	0,021	0,022	0,045	0,047	0,158	0,237	0,299	0,844	0,748
45	0,010	0,011	0,019	0,022	0,041	0,046	0,157	0,236	0,297	0,390	0,743
50	0,010	0,010	0,019	0,019	0,040	0,042	0,059	0,111	0,179	0,332	0,397
56	0,005	0,010	0,010	0,019	0,020	0,041	0,058	0,110	0,178	0,327	0,394
63	0,005	0,005	0,010	0,010	0,020	0,021	0,051	0,099	0,159	0,197	0,345
71	0,005	0,005	0,009	0,010	0,019	0,021	0,051	0,099	0,158	0,194	0,343
80	0,005	0,005	0,009	0,009	0,019	0,019	0,036	0,065	0,123	0,172	0,231
90	0,004	0,005	0,009	0,009	0,017	0,019	0,033	0,060	0,114	0,170	0,209
100	0,004	0,004	0,009	0,009	0,017	0,017	0,032	0,059	0,114	0,169	0,208
112	0,002	0,004	0,004	0,009	0,011	0,017	0,027	0,050	0,097	0,162	0,167
125	0,002	0,002	0,004	0,004	0,011	0,011	0,026	0,050	0,097	0,161	0,167
140	0,002	0,002	0,004	0,004	0,010	0,011	0,025	0,048	0,093	0,141	0,158
160	0,002	0,002	0,004	0,004	0,010	0,010	0,025	0,047	0,093	0,140	0,157
180	0,002	0,002	0,003	0,004	0,010	0,010	0,022	0,043	0,086	0,137	0,136
200	0,002	0,002	0,003	0,003	0,010	0,010	0,022	0,043	0,085	0,137	0,136
224	0,002	0,002	0,003	0,003	0,009	0,010	0,022	0,042	0,084	0,129	0,132
250	0,002	0,002	0,003	0,003	0,009	0,009	0,022	0,042	0,084	0,129	0,132
280	0,001	0,002	0,003	0,003	0,008	0,009	0,020	0,038	0,078	0,128	0,115
315	0,001	0,001	0,003	0,003	0,008	0,008	0,020	0,038	0,078	0,127	0,115
355	0,001	0,001	0,003	0,003	0,008	0,008	0,019	0,038	0,077	0,120	0,114
400	0,001	0,001	0,003	0,003	0,008	0,008	0,019	0,038	0,077	0,120	0,114
450	---	0,001	---	0,003	---	0,008	---	---	---	---	---

SK ..407 Units

SK ..507 Units

Exact Ratio

Nom. Ratio	SK 5407/ SK 5507	SK 6407/ SK 6507	SK 7407/ SK 7507	SK 8407/ SK 8507	SK 9407/ SK 9507	SK 10407/ SK 10507	SK 11407/ SK 11507	SK 12407/ SK 12507	SK 13407/ SK 13507	SK 14407/ SK 14507	SK 15407/ SK 15507
	Exact Ratio										
i_N	i_{ges}	i_{ges}	i_{ges}	i_{ges}	i_{ges}	i_{ges}	i_{ges}	i_{ges}	i_{ges}	i_{ges}	i_{ges}
12,5	---	---	---	---	---	---	12,74	12,81	13,04	---	12,61
14	---	---	---	---	---	---	13,95	13,97	14,22	14,02	13,76
16	---	---	---	---	---	---	16,34	16,33	16,00	15,12	16,10
18	18,00		17,52	---	17,72	---	17,89	17,81	17,45	17,76	17,56
20	19,68	19,97	19,26	19,96	19,48	19,96	20,35	20,25	20,04	19,16	19,98
22,4	21,86	22,01	22,09	21,20	22,35	21,86	22,27	22,09	21,86	21,80	21,79
25	23,88	24,25	24,30	25,18	24,56	25,18	26,04	25,82	25,87	23,52	25,49
28	29,31	26,72	28,53	26,76	28,85	27,56	28,50	28,16	28,22	27,30	27,81
31,5	32,05	32,53	31,36	32,50	31,72	32,50	31,46	31,31	30,99	29,45	30,89
35,5	35,59	35,85	35,97	34,53	36,40	35,59	34,45	34,16	33,80	35,24	33,70
40	38,89	39,49	39,57	41,01	40,00	41,01	40,26	39,92	40,01	38,02	39,42
45	44,84	43,52	45,45	43,57	45,95	44,89	44,08	43,55	43,64	41,21	43,00
50	49,02	49,78	49,96	51,78	50,51	51,78	51,25	51,01	50,48	49,31	50,33
56	57,48	54,85	58,09	55,02	58,79	56,70	56,11	55,64	55,07	53,20	54,90
63	62,80	63,78	63,90	66,23	64,60	66,23	65,59	65,04	65,17	62,22	64,21
71	72,41	70,28	73,39	70,36	74,21	72,49	71,80	70,94	71,09	67,13	70,05
80	79,16	80,39	80,67	83,62	81,57	83,62	79,13	78,46	77,66	80,33	77,42
90	93,19	88,57	94,30	88,85	95,36	91,55	92,50	91,72	91,91	86,67	90,56
100	101,82	103,42	103,66	107,43	104,85	107,43	101,26	100,05	100,26	94,67	98,78
112	117,20	113,93	114,10	114,14	116,35	117,65	113,11	112,83	113,14	113,28	111,66
125	128,05	130,05	125,47	130,05	127,88	131,07	123,83	123,08	123,42	122,22	121,80
140	148,38	143,30	148,13	138,15	151,28	143,51	144,75	143,87	146,08	139,45	142,47
160	162,12	164,66	162,86	168,79	166,30	170,43	158,47	156,94	159,35	150,46	155,41
180	185,93	181,43	182,45	179,35	182,86	186,63	178,17	177,31	177,88	180,04	177,34
200	203,20	206,35	200,62	207,90	200,99	205,98	195,05	193,41	194,04	194,25	193,45
224	229,58	227,37	226,60	220,87	227,29	225,57	228,01	226,08	229,66	219,24	226,28
250	250,85	254,78	249,18	258,22	249,83	256,05	249,61	246,62	250,52	236,54	246,83
280	290,66	280,72	294,18	274,38	295,57	280,39	289,22	287,82	284,85	283,06	283,98
315	317,58	322,57	323,47	335,21	324,86	332,92	316,62	313,96	310,73	305,40	309,77
355	364,21	355,38	362,29	356,15	357,22	364,58	370,12	366,99	367,77	351,08	362,35
400	398,00	404,22	398,37	412,85	392,65	402,38	405,18	400,33	401,17	378,79	395,26
450	---	445,38	---	438,67	---	440,63	---	---	---	---	---

SK ..407 Units

SK ..507 Units

Thermal Rating
M1/M3 Mounting - 1000 rpm
@ 20°C = 68°F



Nom. Ratio	Cooling Type		SK 5407/ SK 5507	SK 6407/ SK 6507	SK 7407/ SK 7507	SK 8407/ SK 8507	SK 9407/ SK 9507	SK 10407/ SK 10507	SK 11407/ SK 11507	SK 12407/ SK 12507	SK 13407/ SK 13507	SK 14407/ SK 14507	SK 15407/ SK 15507
			Thermal Power										
i_N			P_N [kW]	P_N [kW]	P_N [kW]	P_N [kW]	P_N [kW]	P_N [kW]	P_N [kW]	P_N [kW]	P_N [kW]	P_N [kW]	P_N [kW]
12,5	---	$Pt_{0.20}$	---	---	---	---	---	---	202	204	305	---	311
	FAN	$P_{tF.20}$	---	---	---	---	---	---	168	219	294	---	432
	CC	$P_{tC.20}$	---	---	---	---	---	---	311	453	647	---	744
14	---	$Pt_{0.20}$	---	---	---	---	---	---	195	195	295	333	303
	FAN	$P_{tF.20}$	---	---	---	---	---	---	160	206	281	322	410
	CC	$P_{tC.20}$	---	---	---	---	---	---	297	427	618	623	707
16	---	$Pt_{0.20}$	---	---	---	---	---	---	199	209	311	327	354
	FAN	$P_{tF.20}$	---	---	---	---	---	---	155	202	275	313	395
	CC	$P_{tC.20}$	---	---	---	---	---	---	288	419	606	605	684
18	---	$Pt_{0.20}$	95	---	113	---	165	---	191	199	300	338	341
	FAN	$P_{tF.20}$	59	---	77	---	115	---	148	190	262	292	376
	CC	$P_{tC.20}$	88	---	94	---	104	---	275	394	579	565	650
20	---	$Pt_{0.20}$	92	108	110	119	158	188	191	206	306	346	365
	FAN	$P_{tF.20}$	56	66	75	78	110	127	144	187	252	281	362
	CC	$P_{tC.20}$	84	89	91	85	99	103	268	388	557	546	627
22,4	---	$Pt_{0.20}$	91	102	108	127	160	180	184	195	294	338	350
	FAN	$P_{tF.20}$	56	62	73	83	109	121	137	176	241	273	344
	CC	$P_{tC.20}$	83	85	89	92	98	98	255	365	533	530	597
25	---	$Pt_{0.20}$	87	102	105	113	153	182	180	196	289	335	359
	FAN	$P_{tF.20}$	53	62	70	73	104	120	131	170	226	259	326
	CC	$P_{tC.20}$	79	84	86	80	93	97	244	353	500	503	566
28	---	$Pt_{0.20}$	78	97	95	121	144	173	172	187	278	326	344
	FAN	$P_{tF.20}$	47	59	61	78	93	114	125	160	216	251	310
	CC	$P_{tC.20}$	70	80	75	86	83	92	233	333	479	489	539
31,5	---	$Pt_{0.20}$	75	87	93	99	138	163	166	182	285	313	387
	FAN	$P_{tF.20}$	45	52	60	62	89	102	113	139	192	233	274
	CC	$P_{tC.20}$	67	71	73	68	80	83	211	290	426	453	479
35,5	---	$Pt_{0.20}$	74	83	90	106	138	156	159	174	275	305	371
	FAN	$P_{tF.20}$	44	50	58	66	88	98	108	132	185	226	262
	CC	$P_{tC.20}$	66	67	71	73	79	79	202	275	410	440	458
40	---	$Pt_{0.20}$	72	83	88	94	132	156	155	171	265	316	365
	FAN	$P_{tF.20}$	43	49	56	58	83	97	104	128	175	206	252
	CC	$P_{tC.20}$	63	67	69	64	75	78	194	268	389	402	440
45	---	$Pt_{0.20}$	69	79	85	101	129	149	149	164	255	299	350
	FAN	$P_{tF.20}$	41	47	54	62	81	92	100	122	168	193	241
	CC	$P_{tC.20}$	61	64	66	69	73	74	186	254	374	377	420
50	---	$Pt_{0.20}$	67	77	83	88	123	145	136	163	191	292	326
	FAN	$P_{tF.20}$	39	46	52	54	77	89	85	108	130	188	209
	CC	$P_{tC.20}$	59	62	64	60	69	72	158	226	292	367	366
56	---	$Pt_{0.20}$	60	74	84	94	119	139	131	156	186	266	314
	FAN	$P_{tF.20}$	35	43	50	58	71	85	82	103	126	165	201
	CC	$P_{tC.20}$	52	59	60	64	64	69	152	216	283	321	351
63	---	$Pt_{0.20}$	58	67	82	87	114	134	128	153	180	261	306
	FAN	$P_{tF.20}$	34	39	48	50	68	78	79	101	121	161	194
	CC	$P_{tC.20}$	50	53	59	55	61	63	147	211	272	313	340
71	---	$Pt_{0.20}$	56	64	79	93	112	128	123	147	175	247	294
	FAN	$P_{tF.20}$	33	37	46	53	66	74	76	96	117	152	187
	CC	$P_{tC.20}$	49	51	56	59	59	60	142	201	263	296	327
80	---	$Pt_{0.20}$	54	63	77	81	107	125	101	126	150	241	231
	FAN	$P_{tF.20}$	32	37	45	47	63	73	64	83	105	148	161
	CC	$P_{tC.20}$	47	50	55	51	57	59	120	173	235	289	280
90	---	$Pt_{0.20}$	53	60	73	87	103	120	97	123	145	194	225
	FAN	$P_{tF.20}$	31	35	43	50	61	69	62	80	100	131	155
	CC	$P_{tC.20}$	46	47	52	55	54	56	114	167	224	254	271
100	---	$Pt_{0.20}$	51	59	71	75	99	115	94	119	141	184	217
	FAN	$P_{tF.20}$	30	34	41	43	58	67	60	77	98	123	150
	CC	$P_{tC.20}$	44	47	50	47	52	54	111	160	218	239	262

Nom. Ratio	Cooling Type		SK 5407/ SK 5507	SK 6407/ SK 6507	SK 7407/ SK 7507	SK 8407/ SK 8507	SK 9407/ SK 9507	SK 10407/ SK 10507	SK 11407/ SK 11507	SK 12407/ SK 12507	SK 13407/ SK 13507	SK 14407/ SK 14507	SK 15407/ SK 15507
			Thermal Power										
i_N			P_N [kW]	P_N [kW]	P_N [kW]	P_N [kW]	P_N [kW]	P_N [kW]	P_N [kW]	P_N [kW]	P_N [kW]	P_N [kW]	P_N [kW]
112	---	$Pt_{0.20}$	43	57	57	80	86	110	95	120	141	180	221
	FAN	$P_{tF.20}$	25	33	33	46	51	64	60	78	96	120	149
	CC	$P_{tC.20}$	38	45	41	51	46	52	111	162	215	234	260
125	---	$Pt_{0.20}$	42	48	55	59	83	96	92	116	138	178	213
	FAN	$P_{tF.20}$	24	28	33	34	49	56	58	75	94	117	144
	CC	$P_{tC.20}$	36	38	40	38	44	45	108	155	209	228	251
140	---	$Pt_{0.20}$	41	46	53	62	80	92	89	112	132	174	206
	FAN	$P_{tF.20}$	24	27	31	36	47	54	55	72	89	115	139
	CC	$P_{tC.20}$	36	37	38	40	42	43	102	149	198	224	243
160	---	$Pt_{0.20}$	40	45	52	55	77	89	86	108	128	164	199
	FAN	$P_{tF.20}$	23	26	30	32	45	52	53	69	86	107	134
	CC	$P_{tC.20}$	34	36	37	35	40	42	99	143	192	209	234
180	---	$Pt_{0.20}$	39	44	52	58	75	86	84	106	126	161	194
	FAN	$P_{tF.20}$	22	25	30	34	44	49	52	67	84	105	129
	CC	$P_{tC.20}$	33	35	37	37	40	40	97	140	188	204	225
200	---	$Pt_{0.20}$	37	43	50	54	72	84	81	102	122	156	187
	FAN	$P_{tF.20}$	22	25	30	31	42	48	50	65	82	102	124
	CC	$P_{tC.20}$	32	34	36	34	38	39	93	134	182	197	217
224	---	$Pt_{0.20}$	38	41	49	57	74	81	78	99	117	153	181
	FAN	$P_{tF.20}$	22	24	29	33	43	46	48	62	77	99	120
	CC	$P_{tC.20}$	32	32	35	36	39	38	89	129	172	193	209
250	---	$Pt_{0.20}$	36	42	48	51	71	82	76	95	114	144	175
	FAN	$P_{tF.20}$	21	24	28	29	41	47	46	60	75	93	116
	CC	$P_{tC.20}$	31	33	34	32	37	38	86	124	167	180	202
280	---	$Pt_{0.20}$	35	40	46	54	68	79	72	90	108	141	165
	FAN	$P_{tF.20}$	20	23	27	31	39	45	44	57	72	91	109
	CC	$P_{tC.20}$	30	32	33	34	35	37	82	118	159	176	191
315	---	$Pt_{0.20}$	34	39	45	48	65	75	70	87	105	130	159
	FAN	$P_{tF.20}$	20	23	26	27	38	43	43	55	70	85	105
	CC	$P_{tC.20}$	29	31	32	30	34	35	79	113	155	165	184
355	---	$Pt_{0.20}$	33	38	45	51	64	72	67	84	100	127	154
	FAN	$P_{tF.20}$	19	22	26	29	37	42	41	52	66	83	102
	CC	$P_{tC.20}$	29	30	32	32	33	34	75	109	147	162	178
400	---	$Pt_{0.20}$	32	37	44	46	61	71	65	81	98	127	149
	FAN	$P_{tF.20}$	18	21	25	27	35	41	39	50	64	83	98
	CC	$P_{tC.20}$	28	29	31	29	32	33	73	104	142	162	171
450	---	$Pt_{0.20}$	---	35	---	49	---	68	---	---	---	---	---
	FAN	$P_{tF.20}$	---	20	---	28	---	39	---	---	---	---	---
	CC	$P_{tC.20}$	---	28	---	31	---	31	---	---	---	---	---

Thermal Rating
M1/M3 Mounting - 1000 rpm
@ 40°C = 104°F



Nom. Ratio	Cooling Type		SK 5407/ SK 5507	SK 6407/ SK 6507	SK 7407/ SK 7507	SK 8407/ SK 8507	SK 9407/ SK 9507	SK 10407/ SK 10507	SK 11407/ SK 11507	SK 12407/ SK 12507	SK 13407/ SK 13507	SK 14407/ SK 14507	SK 15407/ SK 15507
			Thermal Power										
i_N			P_N [kW]	P_N [kW]	P_N [kW]	P_N [kW]	P_N [kW]	P_N [kW]	P_N [kW]	P_N [kW]	P_N [kW]	P_N [kW]	P_N [kW]
12,5	---	$Pt_{0.40}$	---	---	---	---	---	---	161	150	232	---	200
	FAN	$P_{tF.40}$	---	---	---	---	---	---	146	192	259	---	386
	CC	$P_{tC.20}$	---	---	---	---	---	---	317	463	662	---	769
14	---	$Pt_{0.40}$	---	---	---	---	---	---	156	144	225	252	198
	FAN	$P_{tF.40}$	---	---	---	---	---	---	139	181	248	285	367
	CC	$P_{tC.20}$	---	---	---	---	---	---	303	436	633	639	731
16	---	$Pt_{0.40}$	---	---	---	---	---	---	160	159	244	249	255
	FAN	$P_{tF.40}$	---	---	---	---	---	---	135	176	241	277	350
	CC	$P_{tC.20}$	---	---	---	---	---	---	294	427	619	621	704
18	---	$Pt_{0.40}$	81	---	94	---	137	---	155	152	236	266	247
	FAN	$P_{tF.40}$	51	---	67	---	100	---	129	166	231	257	333
	CC	$P_{tC.20}$	89	---	96	---	106	---	280	402	592	579	669
20	---	$Pt_{0.40}$	78	92	92	99	131	157	156	160	244	277	275
	FAN	$P_{tF.40}$	49	57	65	67	95	110	125	163	221	247	319
	CC	$P_{tC.20}$	85	91	93	87	101	105	272	395	569	559	644
22,4	---	$Pt_{0.40}$	77	87	91	106	134	150	150	152	235	270	265
	FAN	$P_{tF.40}$	48	54	63	72	94	105	119	154	211	240	303
	CC	$P_{tC.20}$	84	86	90	93	100	100	260	373	544	543	613
25	---	$Pt_{0.40}$	74	87	88	95	128	153	148	155	234	271	279
	FAN	$P_{tF.40}$	46	54	61	63	90	104	114	148	198	227	286
	CC	$P_{tC.20}$	80	86	88	82	95	99	248	359	510	515	580
28	---	$Pt_{0.40}$	67	83	80	102	122	146	142	148	225	264	268
	FAN	$P_{tF.40}$	40	51	53	68	80	99	109	140	189	221	273
	CC	$P_{tC.20}$	71	81	76	88	85	94	237	339	488	500	552
31,5	---	$Pt_{0.40}$	64	75	78	84	117	138	138	148	239	256	320
	FAN	$P_{tF.40}$	39	45	51	54	77	89	98	120	167	204	240
	CC	$P_{tC.20}$	68	72	74	70	81	85	214	294	434	463	489
35,5	---	$Pt_{0.40}$	64	71	77	90	117	132	133	142	231	249	308
	FAN	$P_{tF.40}$	38	43	50	57	76	84	94	114	161	198	229
	CC	$P_{tC.20}$	67	69	72	74	80	81	205	280	417	450	468
40	---	$Pt_{0.40}$	61	71	75	80	112	132	129	140	223	266	304
	FAN	$P_{tF.40}$	37	43	49	51	72	84	90	111	152	180	220
	CC	$P_{tC.20}$	64	68	70	66	77	80	197	272	396	411	449
45	---	$Pt_{0.40}$	59	68	72	85	110	126	125	134	215	253	292
	FAN	$P_{tF.40}$	35	40	47	54	70	80	86	106	147	168	210
	CC	$P_{tC.20}$	62	65	67	70	74	76	189	258	381	384	429
50	---	$Pt_{0.40}$	57	66	70	75	105	124	115	137	161	246	276
	FAN	$P_{tF.40}$	34	39	45	47	67	77	73	93	112	164	182
	CC	$P_{tC.20}$	60	63	65	61	71	74	161	229	296	374	373
56	---	$Pt_{0.40}$	52	63	72	80	103	118	112	131	156	226	265
	FAN	$P_{tF.40}$	30	38	43	50	61	74	70	89	109	144	175
	CC	$P_{tC.20}$	53	60	62	65	65	70	155	219	287	328	359
63	---	$Pt_{0.40}$	50	58	70	75	98	115	108	129	151	221	259
	FAN	$P_{tF.40}$	29	34	42	43	58	67	68	87	104	140	169
	CC	$P_{tC.20}$	51	54	60	56	62	64	150	214	276	320	347
71	---	$Pt_{0.40}$	48	55	68	80	96	110	105	124	147	210	249
	FAN	$P_{tF.40}$	28	32	40	46	57	64	66	83	101	132	163
	CC	$P_{tC.20}$	50	52	57	60	60	61	144	204	267	302	333
80	---	$Pt_{0.40}$	47	54	66	70	92	107	85	106	125	205	192
	FAN	$P_{tF.40}$	27	32	39	40	54	63	56	72	91	129	140
	CC	$P_{tC.20}$	48	51	56	52	58	60	122	176	239	295	286
90	---	$Pt_{0.40}$	46	52	63	74	89	103	82	104	121	162	187
	FAN	$P_{tF.40}$	27	30	37	43	52	60	53	70	87	115	136
	CC	$P_{tC.20}$	47	48	53	56	55	57	117	170	228	260	277
100	---	$Pt_{0.40}$	44	51	61	65	85	99	80	100	118	154	181
	FAN	$P_{tF.40}$	26	30	36	37	50	58	52	67	85	108	131
	CC	$P_{tC.20}$	45	48	51	48	53	55	113	163	221	244	268

Nom. Ratio	Cooling Type		SK 5407/ SK 5507	SK 6407/ SK 6507	SK 7407/ SK 7507	SK 8407/ SK 8507	SK 9407/ SK 9507	SK 10407/ SK 10507	SK 11407/ SK 11507	SK 12407/ SK 12507	SK 13407/ SK 13507	SK 14407/ SK 14507	SK 15407/ SK 15507
			Thermal Power										
i_N			P_N [kW]	P_N [kW]	P_N [kW]	P_N [kW]	P_N [kW]	P_N [kW]	P_N [kW]	P_N [kW]	P_N [kW]	P_N [kW]	P_N [kW]
112	---	$Pt_{0.40}$	37	49	49	69	74	95	81	102	118	151	184
	FAN	$P_{tF.40}$	22	28	29	40	44	55	52	67	84	106	130
	CC	$P_{tC.20}$	38	45	41	52	47	53	113	164	219	239	266
125	---	$Pt_{0.40}$	36	41	47	51	71	83	78	98	115	149	178
	FAN	$P_{tF.40}$	21	24	28	29	42	48	50	65	81	103	126
	CC	$P_{tC.20}$	37	39	40	38	45	46	109	158	212	233	257
140	---	$Pt_{0.40}$	35	40	46	53	68	79	75	95	110	146	173
	FAN	$P_{tF.40}$	21	23	27	31	41	47	48	62	77	101	121
	CC	$P_{tC.20}$	36	37	39	40	43	44	104	152	202	229	248
160	---	$Pt_{0.40}$	34	39	45	48	66	76	73	91	107	138	167
	FAN	$P_{tF.40}$	20	23	26	28	39	45	46	60	75	94	117
	CC	$P_{tC.20}$	35	37	38	36	41	43	101	145	196	213	239
180	---	$Pt_{0.40}$	33	38	44	50	65	73	71	90	106	135	163
	FAN	$P_{tF.40}$	19	22	26	29	38	43	45	59	73	92	112
	CC	$P_{tC.20}$	34	35	38	38	40	41	98	143	191	209	230
200	---	$Pt_{0.40}$	32	37	43	46	62	72	69	86	103	132	157
	FAN	$P_{tF.40}$	19	21	26	27	37	42	44	56	71	89	109
	CC	$P_{tC.20}$	33	35	37	35	39	40	95	137	185	202	222
224	---	$Pt_{0.40}$	32	35	42	49	63	69	66	84	98	129	152
	FAN	$P_{tF.40}$	19	21	25	28	37	40	42	54	67	87	105
	CC	$P_{tC.20}$	33	33	36	37	40	38	91	131	175	198	214
250	---	$Pt_{0.40}$	31	36	41	44	61	71	64	80	96	121	147
	FAN	$P_{tF.40}$	18	21	24	25	36	41	40	52	65	81	101
	CC	$P_{tC.20}$	32	34	35	33	38	39	88	126	170	184	206
280	---	$Pt_{0.40}$	30	34	40	47	58	68	61	77	91	119	139
	FAN	$P_{tF.40}$	18	20	23	27	34	39	38	49	62	80	95
	CC	$P_{tC.20}$	31	32	34	35	36	38	83	120	162	180	194
315	---	$Pt_{0.40}$	29	34	39	41	56	65	59	74	88	109	134
	FAN	$P_{tF.40}$	17	20	23	24	33	38	37	47	60	74	92
	CC	$P_{tC.20}$	30	32	33	31	35	36	81	115	158	169	188
355	---	$Pt_{0.40}$	28	32	39	44	55	62	57	71	84	107	130
	FAN	$P_{tF.40}$	17	19	23	25	32	36	35	46	57	73	89
	CC	$P_{tC.20}$	29	30	33	33	34	34	77	111	149	165	181
400	---	$Pt_{0.40}$	27	32	38	40	53	61	55	69	82	107	125
	FAN	$P_{tF.40}$	16	18	22	23	31	35	34	44	56	73	86
	CC	$P_{tC.20}$	28	30	32	30	33	34	74	106	145	165	175
450	---	$Pt_{0.40}$	---	30	---	42	---	59	---	---	---	---	---
	FAN	$P_{tF.40}$	---	18	---	24	---	34	---	---	---	---	---
	CC	$P_{tC.20}$	---	28	---	32	---	32	---	---	---	---	---

Thermal Rating
M1/M3 Mounting - 1200 rpm
@ 20°C = 68°F



Nom. Ratio	Cooling Type		SK 5407/ SK 5507	SK 6407/ SK 6507	SK 7407/ SK 7507	SK 8407/ SK 8507	SK 9407/ SK 9507	SK 10407/ SK 10507	SK 11407/ SK 11507	SK 12407/ SK 12507	SK 13407/ SK 13507	SK 14407/ SK 14507	SK 15407/ SK 15507
			Thermal Power										
i_N			P_N [kW]	P_N [kW]	P_N [kW]	P_N [kW]	P_N [kW]	P_N [kW]	P_N [kW]	P_N [kW]	P_N [kW]	P_N [kW]	P_N [kW]
12,5	---	$Pt_{0.20}$	---	---	---	---	---	---	177	147	235	---	131
	FAN	$P_{tF.20}$	---	---	---	---	---	---	178	236	321	---	493
	CC	$P_{tC.20}$	---	---	---	---	---	---	330	485	699	---	832
14	---	$Pt_{0.20}$	---	---	---	---	---	---	172	142	230	253	136
	FAN	$P_{tF.20}$	---	---	---	---	---	---	171	223	306	353	467
	CC	$P_{tC.20}$	---	---	---	---	---	---	316	458	668	676	790
16	---	$Pt_{0.20}$	---	---	---	---	---	---	181	165	259	252	230
	FAN	$P_{tF.20}$	---	---	---	---	---	---	165	217	297	343	438
	CC	$P_{tC.20}$	---	---	---	---	---	---	305	447	651	657	750
18	---	$Pt_{0.20}$	97	---	111	---	160	---	174	158	251	284	225
	FAN	$P_{tF.20}$	62	---	81	---	122	---	157	205	284	317	416
	CC	$P_{tC.20}$	92	---	99	---	110	---	292	421	622	610	712
20	---	$Pt_{0.20}$	93	110	108	117	153	184	178	171	267	303	273
	FAN	$P_{tF.20}$	59	69	79	82	116	135	153	200	272	304	396
	CC	$P_{tC.20}$	88	94	96	90	105	109	283	413	597	587	682
22,4	---	$Pt_{0.20}$	93	104	107	125	157	176	171	163	258	296	264
	FAN	$P_{tF.20}$	59	66	77	88	115	128	146	189	260	295	376
	CC	$P_{tC.20}$	87	89	93	97	104	104	270	390	571	570	648
25	---	$Pt_{0.20}$	89	104	104	113	150	180	169	169	261	302	292
	FAN	$P_{tF.20}$	56	65	74	77	110	127	139	181	242	279	353
	CC	$P_{tC.20}$	83	89	91	85	99	103	258	375	534	540	611
28	---	$Pt_{0.20}$	80	99	95	121	145	172	163	161	252	295	281
	FAN	$P_{tF.20}$	49	62	64	82	98	121	133	171	232	271	336
	CC	$P_{tC.20}$	73	84	79	91	88	98	246	354	512	524	582
31,5	---	$Pt_{0.20}$	77	90	93	101	140	165	162	170	280	289	369
	FAN	$P_{tF.20}$	47	55	63	65	93	108	119	146	204	250	293
	CC	$P_{tC.20}$	70	75	76	72	84	87	222	305	452	485	510
35,5	---	$Pt_{0.20}$	77	86	91	107	139	158	156	163	270	282	354
	FAN	$P_{tF.20}$	47	52	61	70	92	103	114	139	196	243	280
	CC	$P_{tC.20}$	69	71	74	77	83	83	213	290	435	471	488
40	---	$Pt_{0.20}$	74	86	89	96	134	158	152	162	262	312	353
	FAN	$P_{tF.20}$	45	52	59	62	88	102	110	135	186	220	268
	CC	$P_{tC.20}$	67	71	72	68	79	82	204	282	412	428	467
45	---	$Pt_{0.20}$	71	82	86	102	131	151	147	155	253	298	339
	FAN	$P_{tF.20}$	43	49	57	66	85	97	105	129	179	205	256
	CC	$P_{tC.20}$	64	67	69	72	77	79	196	268	397	400	447
50	---	$Pt_{0.20}$	69	80	84	90	125	148	138	162	190	291	325
	FAN	$P_{tF.20}$	42	48	55	57	82	94	89	113	136	200	222
	CC	$P_{tC.20}$	62	66	67	63	73	76	166	237	306	389	388
56	---	$Pt_{0.20}$	62	76	87	96	124	141	134	156	185	270	314
	FAN	$P_{tF.20}$	37	46	52	61	74	90	86	108	132	175	214
	CC	$P_{tC.20}$	55	62	64	67	67	73	160	226	297	341	373
63	---	$Pt_{0.20}$	60	70	85	90	119	139	130	153	179	264	306
	FAN	$P_{tF.20}$	36	41	51	53	71	82	83	106	127	171	206
	CC	$P_{tC.20}$	53	56	62	58	64	66	155	221	285	333	360
71	---	$Pt_{0.20}$	59	67	82	96	116	133	126	147	174	250	295
	FAN	$P_{tF.20}$	35	39	49	56	69	78	80	101	123	161	198
	CC	$P_{tC.20}$	51	53	59	62	62	63	149	211	276	314	346
80	---	$Pt_{0.20}$	57	65	80	85	111	130	101	125	145	245	222
	FAN	$P_{tF.20}$	33	38	47	49	66	76	68	88	111	157	172
	CC	$P_{tC.20}$	50	52	58	54	60	62	126	183	248	306	299
90	---	$Pt_{0.20}$	55	62	76	90	107	124	98	122	141	189	216
	FAN	$P_{tF.20}$	33	37	45	53	64	73	65	85	106	140	166
	CC	$P_{tC.20}$	48	50	55	58	57	59	121	176	236	272	289
100	---	$Pt_{0.20}$	53	62	74	78	103	120	95	118	137	179	209
	FAN	$P_{tF.20}$	31	36	44	45	61	70	63	82	103	132	160
	CC	$P_{tC.20}$	47	49	53	50	55	57	117	169	230	255	279

Nom. Ratio	Cooling Type		SK 5407/ SK 5507	SK 6407/ SK 6507	SK 7407/ SK 7507	SK 8407/ SK 8507	SK 9407/ SK 9507	SK 10407/ SK 10507	SK 11407/ SK 11507	SK 12407/ SK 12507	SK 13407/ SK 13507	SK 14407/ SK 14507	SK 15407/ SK 15507
			Thermal Power										
i_N			P_N [kW]	P_N [kW]	P_N [kW]	P_N [kW]	P_N [kW]	P_N [kW]	P_N [kW]	P_N [kW]	P_N [kW]	P_N [kW]	P_N [kW]
112	---	$Pt_{0.20}$	45	59	59	83	89	115	96	120	138	176	215
	FAN	$P_{tF.20}$	27	34	35	48	54	67	63	82	102	129	159
	CC	$P_{tC.20}$	40	47	43	53	48	54	117	171	227	250	277
125	---	$Pt_{0.20}$	44	50	57	61	86	100	93	116	135	175	208
	FAN	$P_{tF.20}$	26	29	34	36	52	59	61	79	99	126	154
	CC	$P_{tC.20}$	38	40	42	40	46	48	113	164	221	244	268
140	---	$Pt_{0.20}$	43	48	55	65	83	96	90	113	129	171	202
	FAN	$P_{tF.20}$	25	28	33	38	49	57	58	76	94	123	148
	CC	$P_{tC.20}$	37	39	40	42	44	46	108	157	209	238	258
160	---	$Pt_{0.20}$	41	47	54	58	79	92	87	108	126	161	195
	FAN	$P_{tF.20}$	24	28	32	34	48	54	56	73	92	115	143
	CC	$P_{tC.20}$	36	38	39	37	43	44	105	151	204	223	249
180	---	$Pt_{0.20}$	40	45	54	61	78	89	85	107	124	158	191
	FAN	$P_{tF.20}$	24	27	32	36	47	52	55	71	89	112	137
	CC	$P_{tC.20}$	35	36	39	39	42	42	102	148	198	218	239
200	---	$Pt_{0.20}$	39	45	52	56	75	87	82	103	121	155	184
	FAN	$P_{tF.20}$	23	26	31	33	45	51	53	68	86	109	132
	CC	$P_{tC.20}$	34	36	38	36	40	41	99	142	192	211	231
224	---	$Pt_{0.20}$	39	43	51	59	76	84	79	99	116	151	178
	FAN	$P_{tF.20}$	23	25	30	35	46	49	51	66	82	106	128
	CC	$P_{tC.20}$	34	34	37	38	41	40	94	136	182	206	223
250	---	$Pt_{0.20}$	38	44	50	53	73	85	77	96	112	142	172
	FAN	$P_{tF.20}$	22	26	30	31	44	50	49	63	80	99	123
	CC	$P_{tC.20}$	33	35	36	34	39	41	91	131	177	192	215
280	---	$Pt_{0.20}$	37	42	48	57	70	82	73	91	107	139	163
	FAN	$P_{tF.20}$	22	24	28	33	42	48	46	60	76	97	116
	CC	$P_{tC.20}$	32	33	35	36	37	39	86	125	169	188	203
315	---	$Pt_{0.20}$	36	41	47	50	67	78	71	88	104	128	157
	FAN	$P_{tF.20}$	21	24	28	29	40	46	45	58	74	90	112
	CC	$P_{tC.20}$	31	33	34	32	36	37	84	120	164	176	196
355	---	$Pt_{0.20}$	34	39	47	53	66	75	68	85	100	126	152
	FAN	$P_{tF.20}$	20	23	28	31	39	44	43	55	70	89	108
	CC	$P_{tC.20}$	30	31	34	34	35	36	80	115	155	172	189
400	---	$Pt_{0.20}$	33	38	45	48	63	74	66	82	97	126	147
	FAN	$P_{tF.20}$	19	22	27	28	37	43	42	53	68	89	104
	CC	$P_{tC.20}$	29	31	33	31	34	35	77	110	151	172	182
450	---	$Pt_{0.20}$	---	37	---	51	---	71	---	---	---	---	---
	FAN	$P_{tF.20}$	---	21	---	30	---	41	---	---	---	---	---
	CC	$P_{tC.20}$	---	29	---	33	---	33	---	---	---	---	---

Thermal Rating
M1/M3 Mounting - 1200 rpm
@ 40°C = 104°F



Nom. Ratio	Cooling Type		SK 5407/ SK 5507	SK 6407/ SK 6507	SK 7407/ SK 7507	SK 8407/ SK 8507	SK 9407/ SK 9507	SK 10407/ SK 10507	SK 11407/ SK 11507	SK 12407/ SK 12507	SK 13407/ SK 13507	SK 14407/ SK 14507	SK 15407/ SK 15507
			Thermal Power										
i_N			P_N [kW]	P_N [kW]	P_N [kW]	P_N [kW]	P_N [kW]	P_N [kW]	P_N [kW]	P_N [kW]	P_N [kW]	P_N [kW]	P_N [kW]
12,5	---	$Pt_{0.40}$	---	---	---	---	---	---	133	87	153	---	*
	FAN	$P_{tF.40}$	---	---	---	---	---	---	156	210	286	---	451
	CC	$P_{tC.20}$	---	---	---	---	---	---	337	498	719	---	871
14	---	$Pt_{0.40}$	---	---	---	---	---	---	130	85	152	162	*
	FAN	$P_{tF.40}$	---	---	---	---	---	---	149	198	273	316	438
	CC	$P_{tC.20}$	---	---	---	---	---	---	322	470	687	699	838
16	---	$Pt_{0.40}$	---	---	---	---	---	---	140	111	184	163	111
	FAN	$P_{tF.40}$	---	---	---	---	---	---	144	191	264	307	399
	CC	$P_{tC.20}$	---	---	---	---	---	---	312	457	668	679	783
18	---	$Pt_{0.40}$	82	---	91	---	130	---	135	107	180	204	113
	FAN	$P_{tF.40}$	54	---	70	---	106	---	137	180	252	281	379
	CC	$P_{tC.20}$	94	---	101	---	112	---	298	431	639	628	744
20	---	$Pt_{0.40}$	79	93	89	97	125	151	140	121	200	226	171
	FAN	$P_{tF.40}$	51	60	68	71	101	117	133	175	240	269	354
	CC	$P_{tC.20}$	90	96	98	92	107	112	289	422	612	603	705
22,4	---	$Pt_{0.40}$	78	88	88	104	129	145	135	116	193	222	167
	FAN	$P_{tF.40}$	51	57	66	76	100	111	127	166	229	261	337
	CC	$P_{tC.20}$	89	91	95	99	106	106	276	398	585	586	671
25	---	$Pt_{0.40}$	75	89	86	94	123	149	135	125	201	233	203
	FAN	$P_{tF.40}$	48	56	64	67	95	110	121	159	213	246	314
	CC	$P_{tC.20}$	85	90	92	86	101	105	263	383	546	553	630
28	---	$Pt_{0.40}$	68	84	80	100	122	142	130	119	194	228	196
	FAN	$P_{tF.40}$	42	53	56	71	85	105	115	150	204	239	299
	CC	$P_{tC.20}$	74	86	80	93	90	100	251	362	523	537	600
31,5	---	$Pt_{0.40}$	66	77	78	85	117	139	133	134	230	227	297
	FAN	$P_{tF.40}$	41	47	54	56	81	93	103	127	178	220	257
	CC	$P_{tC.20}$	72	76	78	73	86	89	226	310	461	497	522
35,5	---	$Pt_{0.40}$	65	73	77	90	117	133	128	129	222	222	286
	FAN	$P_{tF.40}$	40	45	53	60	80	89	99	121	172	214	246
	CC	$P_{tC.20}$	71	72	76	78	85	85	216	295	444	483	499
40	---	$Pt_{0.40}$	63	73	75	81	112	133	126	129	217	258	288
	FAN	$P_{tF.40}$	39	45	51	53	76	88	95	117	162	192	235
	CC	$P_{tC.20}$	68	72	73	69	81	84	208	287	420	437	478
45	---	$Pt_{0.40}$	61	70	72	86	110	128	121	124	209	248	277
	FAN	$P_{tF.40}$	37	43	49	57	74	84	91	112	156	179	224
	CC	$P_{tC.20}$	65	68	71	74	78	80	199	273	404	408	457
50	---	$Pt_{0.40}$	59	68	71	76	106	125	117	135	157	242	272
	FAN	$P_{tF.40}$	36	42	48	50	71	82	77	98	118	175	194
	CC	$P_{tC.20}$	63	67	69	64	75	78	168	241	310	397	396
56	---	$Pt_{0.40}$	53	65	75	81	106	120	113	130	153	227	262
	FAN	$P_{tF.40}$	32	39	45	53	64	78	74	94	114	153	187
	CC	$P_{tC.20}$	56	63	65	69	68	74	162	230	301	348	381
63	---	$Pt_{0.40}$	52	60	73	77	102	119	110	128	149	222	256
	FAN	$P_{tF.40}$	31	35	44	46	62	71	72	91	110	149	180
	CC	$P_{tC.20}$	54	57	63	59	65	68	157	224	289	339	368
71	---	$Pt_{0.40}$	50	57	70	83	99	114	106	123	145	211	247
	FAN	$P_{tF.40}$	30	34	42	49	60	68	69	87	106	140	173
	CC	$P_{tC.20}$	52	54	61	63	64	65	151	214	280	320	354
80	---	$Pt_{0.40}$	48	56	68	73	95	111	84	104	119	207	180
	FAN	$P_{tF.40}$	29	33	41	43	57	66	59	76	97	137	151
	CC	$P_{tC.20}$	50	53	59	55	61	63	128	186	252	312	306
90	---	$Pt_{0.40}$	47	54	65	77	92	107	82	102	115	154	176
	FAN	$P_{tF.40}$	28	32	39	45	55	63	56	74	93	123	146
	CC	$P_{tC.20}$	49	51	56	59	58	60	123	179	241	278	296
100	---	$Pt_{0.40}$	46	53	63	67	88	103	79	98	112	147	170
	FAN	$P_{tF.40}$	27	31	38	39	53	61	55	71	90	116	141
	CC	$P_{tC.20}$	47	50	54	51	56	58	119	173	234	261	286

*** Additional Cooling Necessary - Consult Factory**

Nom. Ratio	Cooling Type		SK 5407/ SK 5507	SK 6407/ SK 6507	SK 7407/ SK 7507	SK 8407/ SK 8507	SK 9407/ SK 9507	SK 10407/ SK 10507	SK 11407/ SK 11507	SK 12407/ SK 12507	SK 13407/ SK 13507	SK 14407/ SK 14507	SK 15407/ SK 15507
			Thermal Power										
i_N			P_N [kW]	P_N [kW]	P_N [kW]	P_N [kW]	P_N [kW]	P_N [kW]	P_N [kW]	P_N [kW]	P_N [kW]	P_N [kW]	P_N [kW]
112	---	$Pt_{0.40}$	39	51	50	72	76	99	80	101	114	144	176
	FAN	$P_{tF.40}$	23	30	30	42	46	58	55	71	89	113	139
	CC	$P_{tC.20}$	40	48	44	54	49	55	119	174	231	256	283
125	---	$Pt_{0.40}$	37	43	49	53	73	85	78	97	111	144	170
	FAN	$P_{tF.40}$	22	25	30	31	45	51	53	68	86	110	134
	CC	$P_{tC.20}$	39	41	43	40	47	49	115	167	225	249	274
140	---	$Pt_{0.40}$	36	41	47	55	71	82	75	94	107	141	166
	FAN	$P_{tF.40}$	22	24	28	33	43	49	51	66	82	108	130
	CC	$P_{tC.20}$	38	39	41	43	45	47	110	160	213	244	264
160	---	$Pt_{0.40}$	35	41	46	49	68	79	73	91	104	133	160
	FAN	$P_{tF.40}$	21	24	28	29	41	47	49	63	80	101	125
	CC	$P_{tC.20}$	37	39	40	38	44	45	107	154	207	228	255
180	---	$Pt_{0.40}$	34	39	46	52	67	76	72	89	103	130	157
	FAN	$P_{tF.40}$	20	23	28	31	40	45	48	62	77	99	120
	CC	$P_{tC.20}$	36	37	40	40	43	43	104	151	202	223	245
200	---	$Pt_{0.40}$	33	38	45	48	64	75	69	86	100	128	152
	FAN	$P_{tF.40}$	20	23	27	28	39	44	46	59	75	95	116
	CC	$P_{tC.20}$	35	36	39	37	41	42	100	144	196	216	236
224	---	$Pt_{0.40}$	34	37	44	51	65	72	67	84	96	125	147
	FAN	$P_{tF.40}$	20	22	26	30	39	43	44	57	71	93	112
	CC	$P_{tC.20}$	35	35	38	39	42	41	96	139	186	211	228
250	---	$Pt_{0.40}$	32	37	43	46	63	73	65	80	93	118	142
	FAN	$P_{tF.40}$	19	22	26	27	38	43	43	55	69	87	108
	CC	$P_{tC.20}$	34	35	37	35	40	41	93	133	180	197	220
280	---	$Pt_{0.40}$	32	36	41	49	60	70	61	77	89	115	135
	FAN	$P_{tF.40}$	19	21	25	28	36	42	40	52	66	85	101
	CC	$P_{tC.20}$	33	34	35	37	38	40	88	127	171	193	207
315	---	$Pt_{0.40}$	30	35	40	43	58	67	60	74	86	106	130
	FAN	$P_{tF.40}$	18	21	24	25	35	40	39	50	64	79	98
	CC	$P_{tC.20}$	32	33	34	32	37	38	85	122	167	180	200
355	---	$Pt_{0.40}$	30	34	40	45	57	65	57	72	83	104	126
	FAN	$P_{tF.40}$	17	20	24	26	34	38	37	48	61	78	94
	CC	$P_{tC.20}$	31	32	34	34	36	36	81	117	158	176	193
400	---	$Pt_{0.40}$	29	33	39	42	54	63	56	69	80	104	122
	FAN	$P_{tF.40}$	17	19	23	24	32	37	36	46	59	78	91
	CC	$P_{tC.20}$	29	31	33	31	34	36	78	113	154	176	186
450	---	$Pt_{0.40}$	---	32	---	44	---	61	---	---	---	---	---
	FAN	$P_{tF.40}$	---	18	---	26	---	36	---	---	---	---	---
	CC	$P_{tC.20}$	---	30	---	33	---	34	---	---	---	---	---

Thermal Rating
M1/M3 Mounting - 1500 rpm
@ 20°C = 68°F



Nom. Ratio	Cooling Type		SK 5407/ SK 5507	SK 6407/ SK 6507	SK 7407/ SK 7507	SK 8407/ SK 8507	SK 9407/ SK 9507	SK 10407/ SK 10507	SK 11407/ SK 11507	SK 12407/ SK 12507	SK 13407/ SK 13507	SK 14407/ SK 14507	SK 15407/ SK 15507
			Thermal Power										
i_N			P_N [kW]	P_N [kW]	P_N [kW]	P_N [kW]	P_N [kW]	P_N [kW]	P_N [kW]	P_N [kW]	P_N [kW]	P_N [kW]	P_N [kW]
12,5	---	$Pt_{0.20}$	---	---	---	---	---	---	121	12	62	---	*
	FAN	$P_{tF.20}$	---	---	---	---	---	---	196	277	382	---	335
	CC	$P_{tC.20}$	---	---	---	---	---	---	359	549	799	---	730
14	---	$Pt_{0.20}$	---	---	---	---	---	---	119	17	69	52	*
	FAN	$P_{tF.20}$	---	---	---	---	---	---	187	262	363	426	335
	CC	$P_{tC.20}$	---	---	---	---	---	---	344	519	762	787	710
16	---	$Pt_{0.20}$	---	---	---	---	---	---	138	67	134	61	*
	FAN	$P_{tF.20}$	---	---	---	---	---	---	179	245	340	412	466
	CC	$P_{tC.20}$	---	---	---	---	---	---	330	495	728	762	819
18	---	$Pt_{0.20}$	97	---	103	---	143	---	135	67	134	152	*
	FAN	$P_{tF.20}$	66	---	87	---	132	---	171	231	324	363	453
	CC	$P_{tC.20}$	99	---	106	---	118	---	316	467	695	686	788
20	---	$Pt_{0.20}$	93	110	101	111	138	169	144	94	175	197	39
	FAN	$P_{tF.20}$	64	74	85	88	125	145	165	222	305	343	480
	CC	$P_{tC.20}$	94	100	103	97	113	117	306	453	660	654	799
22,4	---	$Pt_{0.20}$	93	105	101	119	145	162	140	91	171	195	45
	FAN	$P_{tF.20}$	62	70	82	94	124	138	158	210	292	333	455
	CC	$P_{tC.20}$	93	95	100	103	111	112	292	428	631	635	758
25	---	$Pt_{0.20}$	89	106	98	108	139	169	144	108	193	222	130
	FAN	$P_{tF.20}$	60	70	80	82	118	136	150	200	269	311	407
	CC	$P_{tC.20}$	89	95	97	91	106	111	278	409	586	596	692
28	---	$Pt_{0.20}$	82	101	94	116	143	162	139	104	187	218	127
	FAN	$P_{tF.20}$	52	66	69	88	104	130	144	189	258	302	388
	CC	$P_{tC.20}$	78	90	84	97	94	105	266	387	561	579	659
31,5	---	$Pt_{0.20}$	79	93	92	100	137	164	150	142	258	228	318
	FAN	$P_{tF.20}$	50	58	67	70	100	115	127	157	222	277	320
	CC	$P_{tC.20}$	75	79	81	77	90	93	237	326	489	532	555
35,5	---	$Pt_{0.20}$	79	88	90	106	138	157	145	137	250	224	307
	FAN	$P_{tF.20}$	50	55	65	74	98	110	122	150	213	269	306
	CC	$P_{tC.20}$	74	75	79	81	89	89	227	311	470	517	531
40	---	$Pt_{0.20}$	76	88	88	96	133	158	143	139	247	293	316
	FAN	$P_{tF.20}$	48	55	63	66	94	109	117	145	201	239	292
	CC	$P_{tC.20}$	71	75	77	72	84	88	218	301	445	463	507
45	---	$Pt_{0.20}$	74	85	85	102	130	151	138	134	238	285	304
	FAN	$P_{tF.20}$	46	52	60	70	91	103	113	138	194	222	279
	CC	$P_{tC.20}$	68	71	74	77	82	84	209	287	428	432	485
50	---	$Pt_{0.20}$	71	83	83	90	125	149	138	157	181	278	312
	FAN	$P_{tF.20}$	44	51	59	61	87	101	94	120	144	216	240
	CC	$P_{tC.20}$	66	70	72	67	78	81	176	252	324	421	418
56	---	$Pt_{0.20}$	65	79	91	96	128	142	134	151	177	267	301
	FAN	$P_{tF.20}$	39	49	56	65	79	96	91	115	140	189	231
	CC	$P_{tC.20}$	58	66	68	72	71	78	170	240	315	367	403
63	---	$Pt_{0.20}$	63	73	88	94	123	144	131	149	173	261	297
	FAN	$P_{tF.20}$	38	44	54	56	76	87	88	112	134	184	223
	CC	$P_{tC.20}$	56	59	66	62	68	71	164	235	302	358	388
71	---	$Pt_{0.20}$	61	70	85	100	121	138	127	143	168	249	287
	FAN	$P_{tF.20}$	37	42	52	60	74	84	85	107	130	173	214
	CC	$P_{tC.20}$	55	57	63	66	66	68	158	224	293	338	373
80	---	$Pt_{0.20}$	59	68	83	88	116	135	98	120	132	244	195
	FAN	$P_{tF.20}$	35	41	51	52	71	81	73	94	120	169	188
	CC	$P_{tC.20}$	53	56	62	58	63	66	135	195	266	330	326
90	---	$Pt_{0.20}$	58	65	79	94	112	130	95	117	128	171	191
	FAN	$P_{tF.20}$	35	39	48	56	68	78	70	91	114	153	182
	CC	$P_{tC.20}$	51	53	58	62	61	63	129	189	254	296	315
100	---	$Pt_{0.20}$	56	64	77	82	107	125	92	113	125	163	185
	FAN	$P_{tF.20}$	33	38	47	48	65	75	68	88	111	144	176
	CC	$P_{tC.20}$	49	52	57	53	58	61	125	182	247	278	304

*** Additional Cooling Necessary - Consult Factory**

Nom. Ratio	Cooling Type		SK 5407/ SK 5507	SK 6407/ SK 6507	SK 7407/ SK 7507	SK 8407/ SK 8507	SK 9407/ SK 9507	SK 10407/ SK 10507	SK 11407/ SK 11507	SK 12407/ SK 12507	SK 13407/ SK 13507	SK 14407/ SK 14507	SK 15407/ SK 15507
			Thermal Power										
i_N			P_N [kW]	P_N [kW]	P_N [kW]	P_N [kW]	P_N [kW]	P_N [kW]	P_N [kW]	P_N [kW]	P_N [kW]	P_N [kW]	P_N [kW]
112	---	$Pt_{0.20}$	47	62	61	87	92	120	94	117	128	160	196
	FAN	$P_{tF.20}$	28	37	37	52	57	72	67	88	109	141	173
	CC	$P_{tC.20}$	42	50	46	57	52	58	125	182	243	273	301
125	---	$Pt_{0.20}$	45	52	60	64	89	103	92	112	125	161	190
	FAN	$P_{tF.20}$	27	31	37	38	55	63	65	84	106	137	167
	CC	$P_{tC.20}$	41	43	45	42	50	51	121	175	237	265	291
140	---	$Pt_{0.20}$	44	50	57	67	85	100	88	109	120	158	184
	FAN	$P_{tF.20}$	27	30	35	40	53	61	62	81	101	134	161
	CC	$P_{tC.20}$	40	41	43	44	48	49	116	168	225	259	280
160	---	$Pt_{0.20}$	43	49	56	60	82	96	86	105	117	149	178
	FAN	$P_{tF.20}$	26	30	34	36	51	58	60	78	99	126	156
	CC	$P_{tC.20}$	39	40	42	40	46	47	112	162	219	242	271
180	---	$Pt_{0.20}$	42	48	56	63	81	92	84	104	117	146	177
	FAN	$P_{tF.20}$	25	28	34	38	50	56	59	76	96	123	149
	CC	$P_{tC.20}$	37	39	42	42	45	45	109	158	212	237	259
200	---	$Pt_{0.20}$	41	47	54	58	78	91	82	100	114	145	171
	FAN	$P_{tF.20}$	24	28	33	35	48	55	57	73	93	118	144
	CC	$P_{tC.20}$	36	38	41	38	43	44	105	152	206	229	250
224	---	$Pt_{0.20}$	41	45	54	62	79	87	79	98	109	142	166
	FAN	$P_{tF.20}$	24	27	32	37	49	53	54	70	88	116	139
	CC	$P_{tC.20}$	36	36	40	41	44	43	100	146	196	224	242
250	---	$Pt_{0.20}$	40	46	52	56	76	89	76	94	106	134	160
	FAN	$P_{tF.20}$	24	27	32	33	47	54	52	68	86	108	134
	CC	$P_{tC.20}$	35	37	39	36	42	43	97	140	190	209	233
280	---	$Pt_{0.20}$	38	44	50	59	73	85	73	90	102	131	153
	FAN	$P_{tF.20}$	23	26	30	35	45	51	50	64	81	106	126
	CC	$P_{tC.20}$	34	35	37	39	40	42	92	134	181	205	219
315	---	$Pt_{0.20}$	37	43	49	52	70	82	70	86	99	120	148
	FAN	$P_{tF.20}$	22	26	29	31	43	49	48	62	79	99	121
	CC	$P_{tC.20}$	33	35	36	34	38	40	89	128	176	191	212
355	---	$Pt_{0.20}$	36	41	49	55	69	78	68	84	95	118	144
	FAN	$P_{tF.20}$	22	24	29	33	42	47	46	60	75	97	117
	CC	$P_{tC.20}$	32	33	36	36	37	38	85	123	167	187	204
400	---	$Pt_{0.20}$	35	40	47	51	66	77	66	81	92	118	139
	FAN	$P_{tF.20}$	21	24	29	30	40	46	45	57	73	97	113
	CC	$P_{tC.20}$	31	33	35	33	36	37	82	119	162	187	197
450	---	$Pt_{0.20}$	---	39	---	54	---	74	---	---	---	---	---
	FAN	$P_{tF.20}$	---	23	---	32	---	44	---	---	---	---	---
	CC	$P_{tC.20}$	---	31	---	35	---	36	---	---	---	---	---

Thermal Rating
M1/M3 Mounting - 1500 rpm
@ 40°C = 104°F



Nom. Ratio	Cooling Type		SK 5407/ SK 5507	SK 6407/ SK 6507	SK 7407/ SK 7507	SK 8407/ SK 8507	SK 9407/ SK 9507	SK 10407/ SK 10507	SK 11407/ SK 11507	SK 12407/ SK 12507	SK 13407/ SK 13507	SK 14407/ SK 14507	SK 15407/ SK 15507
			Thermal Power										
i_N			P_N [kW]	P_N [kW]	P_N [kW]	P_N [kW]	P_N [kW]	P_N [kW]	P_N [kW]	P_N [kW]	P_N [kW]	P_N [kW]	P_N [kW]
12,5	---	$Pt_{0.40}$	---	---	---	---	---	---	69	*	*	---	*
	FAN	$P_{tF.40}$	---	---	---	---	---	---	174	192	311	---	111
	CC	$P_{tC.20}$	---	---	---	---	---	---	371	510	794	---	625
14	---	$Pt_{0.40}$	---	---	---	---	---	---	70	*	*	*	*
	FAN	$P_{tF.40}$	---	---	---	---	---	---	166	187	306	332	125
	CC	$P_{tC.20}$	---	---	---	---	---	---	354	487	767	763	610
16	---	$Pt_{0.40}$	---	---	---	---	---	---	93	*	35	*	*
	FAN	$P_{tF.40}$	---	---	---	---	---	---	158	224	317	331	282
	CC	$P_{tC.20}$	---	---	---	---	---	---	339	515	764	749	724
18	---	$Pt_{0.40}$	80	---	81	---	111	---	91	1	40	46	*
	FAN	$P_{tF.40}$	57	---	76	---	115	---	151	214	302	339	278
	CC	$P_{tC.20}$	100	---	109	---	122	---	324	489	729	723	697
20	---	$Pt_{0.40}$	78	92	80	90	107	133	103	33	94	105	*
	FAN	$P_{tF.40}$	55	64	74	76	109	126	145	202	275	312	356
	CC	$P_{tC.20}$	96	102	106	99	116	121	313	470	683	680	751
22,4	---	$Pt_{0.40}$	78	88	81	96	114	128	100	34	93	105	*
	FAN	$P_{tF.40}$	54	61	71	82	108	120	139	191	263	302	345
	CC	$P_{tC.20}$	95	97	102	106	114	115	299	444	653	660	721
25	---	$Pt_{0.40}$	75	89	79	88	110	135	106	56	124	141	7
	FAN	$P_{tF.40}$	52	60	69	72	103	119	131	178	240	279	386
	CC	$P_{tC.20}$	91	96	99	93	109	113	284	421	603	616	737
28	---	$Pt_{0.40}$	69	84	77	94	118	130	103	55	121	140	11
	FAN	$P_{tF.40}$	45	57	59	77	90	113	126	169	230	271	367
	CC	$P_{tC.20}$	79	91	85	99	96	108	271	399	578	598	702
31,5	---	$Pt_{0.40}$	67	78	76	83	113	136	119	104	203	158	238
	FAN	$P_{tF.40}$	43	50	58	60	86	100	111	137	195	246	283
	CC	$P_{tC.20}$	76	81	83	78	92	95	241	333	499	548	570
35,5	---	$Pt_{0.40}$	67	75	75	88	114	130	115	100	197	155	231
	FAN	$P_{tF.40}$	43	48	56	64	85	95	106	131	187	239	271
	CC	$P_{tC.20}$	75	77	80	83	90	91	231	317	480	533	546
40	---	$Pt_{0.40}$	64	75	73	80	110	131	114	104	197	234	244
	FAN	$P_{tF.40}$	41	48	54	57	81	94	102	126	176	210	257
	CC	$P_{tC.20}$	72	76	78	74	86	90	222	307	454	474	520
45	---	$Pt_{0.40}$	62	72	71	85	109	126	111	100	191	230	235
	FAN	$P_{tF.40}$	40	45	52	60	79	90	98	121	170	195	246
	CC	$P_{tC.20}$	70	73	75	78	84	86	213	292	437	442	498
50	---	$Pt_{0.40}$	60	70	69	75	104	124	116	128	147	225	254
	FAN	$P_{tF.40}$	38	44	51	53	75	87	81	104	125	190	211
	CC	$P_{tC.20}$	67	71	73	69	80	83	178	255	329	430	428
56	---	$Pt_{0.40}$	55	67	77	80	109	119	112	123	143	221	245
	FAN	$P_{tF.40}$	34	42	48	56	69	83	79	100	121	165	203
	CC	$P_{tC.20}$	59	67	69	73	73	79	172	244	319	375	412
63	---	$Pt_{0.40}$	54	62	75	80	105	123	110	122	141	216	243
	FAN	$P_{tF.40}$	33	38	47	49	66	76	76	97	116	161	195
	CC	$P_{tC.20}$	57	60	67	63	70	72	167	238	306	366	397
71	---	$Pt_{0.40}$	52	59	73	86	103	118	106	118	137	207	234
	FAN	$P_{tF.40}$	32	36	45	52	64	72	73	93	113	152	188
	CC	$P_{tC.20}$	56	58	65	67	68	69	161	228	297	345	382
80	---	$Pt_{0.40}$	50	58	71	76	99	116	80	97	103	202	148
	FAN	$P_{tF.40}$	30	35	44	45	61	70	63	82	104	148	166
	CC	$P_{tC.20}$	54	56	63	59	65	67	137	199	271	337	335
90	---	$Pt_{0.40}$	49	56	67	80	95	111	78	95	100	132	146
	FAN	$P_{tF.40}$	30	34	41	48	59	67	61	79	100	136	160
	CC	$P_{tC.20}$	52	54	60	63	62	64	132	192	259	304	323
100	---	$Pt_{0.40}$	48	55	66	70	92	107	76	92	98	127	142
	FAN	$P_{tF.40}$	29	33	40	42	56	65	59	76	97	128	155
	CC	$P_{tC.20}$	50	53	58	54	60	62	128	185	252	286	313

*** Additional Cooling Necessary - Consult Factory**

Nom. Ratio	Cooling Type		SK 5407/ SK 5507	SK 6407/ SK 6507	SK 7407/ SK 7507	SK 8407/ SK 8507	SK 9407/ SK 9507	SK 10407/ SK 10507	SK 11407/ SK 11507	SK 12407/ SK 12507	SK 13407/ SK 13507	SK 14407/ SK 14507	SK 15407/ SK 15507
			Thermal Power										
i_N			P_N [kW]	P_N [kW]	P_N [kW]	P_N [kW]	P_N [kW]	P_N [kW]	P_N [kW]	P_N [kW]	P_N [kW]	P_N [kW]	P_N [kW]
112	---	$Pt_{0.40}$	40	53	52	75	78	103	78	95	102	124	153
	FAN	$P_{tF.40}$	24	32	32	45	50	62	58	76	96	125	152
	CC	$P_{tC.20}$	43	51	46	58	53	59	127	186	248	280	309
125	---	$Pt_{0.40}$	39	45	51	55	75	88	76	92	99	127	148
	FAN	$P_{tF.40}$	24	27	32	33	48	55	57	73	93	121	147
	CC	$P_{tC.20}$	42	43	45	43	51	52	123	178	241	272	298
140	---	$Pt_{0.40}$	38	43	49	58	73	85	73	90	96	125	145
	FAN	$P_{tF.40}$	23	26	30	35	46	53	54	71	89	118	142
	CC	$P_{tC.20}$	41	42	44	45	49	50	118	172	229	266	288
160	---	$Pt_{0.40}$	37	42	48	51	70	82	71	86	93	118	140
	FAN	$P_{tF.40}$	22	26	30	31	44	50	53	68	86	111	137
	CC	$P_{tC.20}$	39	41	43	40	47	48	114	165	223	249	278
180	---	$Pt_{0.40}$	36	41	48	54	69	79	70	86	94	116	141
	FAN	$P_{tF.40}$	22	25	30	33	43	48	51	66	83	109	131
	CC	$P_{tC.20}$	38	39	42	43	46	46	111	161	216	244	266
200	---	$Pt_{0.40}$	35	40	46	50	66	77	68	83	91	116	136
	FAN	$P_{tF.40}$	21	24	29	30	41	47	49	64	81	104	126
	CC	$P_{tC.20}$	37	39	41	39	44	45	107	155	210	235	257
224	---	$Pt_{0.40}$	35	38	46	53	68	74	65	80	88	113	132
	FAN	$P_{tF.40}$	21	23	28	32	42	46	47	61	77	102	122
	CC	$P_{tC.20}$	37	37	40	41	45	44	102	149	200	230	247
250	---	$Pt_{0.40}$	34	39	45	48	65	76	63	77	85	107	128
	FAN	$P_{tF.40}$	20	23	27	29	40	46	46	59	75	96	118
	CC	$P_{tC.20}$	36	38	39	37	43	44	99	143	194	215	239
280	---	$Pt_{0.40}$	33	37	43	51	62	73	60	74	82	105	122
	FAN	$P_{tF.40}$	20	22	26	30	39	44	43	56	71	94	110
	CC	$P_{tC.20}$	35	36	38	39	41	42	94	136	184	210	224
315	---	$Pt_{0.40}$	32	37	42	45	60	70	59	71	80	96	118
	FAN	$P_{tF.40}$	19	22	25	27	37	42	42	54	69	87	107
	CC	$P_{tC.20}$	34	35	37	35	39	41	91	131	179	196	216
355	---	$Pt_{0.40}$	31	35	42	47	59	67	56	69	77	94	115
	FAN	$P_{tF.40}$	19	21	25	28	36	41	40	52	66	85	103
	CC	$P_{tC.20}$	33	34	37	37	38	39	87	126	170	192	209
400	---	$Pt_{0.40}$	30	34	41	43	56	66	55	67	75	94	111
	FAN	$P_{tF.40}$	18	21	25	26	35	40	39	50	64	85	99
	CC	$P_{tC.20}$	31	33	36	34	37	38	84	121	165	192	202
450	---	$Pt_{0.40}$	---	33	---	46	---	63	---	---	---	---	---
	FAN	$P_{tF.40}$	---	20	---	27	---	38	---	---	---	---	---
	CC	$P_{tC.20}$	---	32	---	36	---	36	---	---	---	---	---

Thermal Rating
M1/M3 Mounting - 1800 rpm
@ 20°C = 68°F



Nom. Ratio	Cooling Type		SK 5407/ SK 5507	SK 6407/ SK 6507	SK 7407/ SK 7507	SK 8407/ SK 8507	SK 9407/ SK 9507	SK 10407/ SK 10507	SK 11407/ SK 11507	SK 12407/ SK 12507	SK 13407/ SK 13507	SK 14407/ SK 14507	SK 15407/ SK 15507
			Thermal Power										
i_N			P_N [kW]	P_N [kW]	P_N [kW]	P_N [kW]	P_N [kW]	P_N [kW]	P_N [kW]	P_N [kW]	P_N [kW]	P_N [kW]	P_N [kW]
12,5	---	$Pt_{0.20}$	---	---	---	---	---	---	33	*	*	---	*
	FAN	$P_{tF.20}$	---	---	---	---	---	---	222	150	266	---	*
	CC	$P_{tC.20}$	---	---	---	---	---	---	398	451	734	---	359
14	---	$Pt_{0.20}$	---	---	---	---	---	---	36	*	*	*	*
	FAN	$P_{tF.20}$	---	---	---	---	---	---	212	150	267	275	*
	CC	$P_{tC.20}$	---	---	---	---	---	---	380	434	713	683	366
16	---	$Pt_{0.20}$	---	---	---	---	---	---	75	*	*	*	*
	FAN	$P_{tF.20}$	---	---	---	---	---	---	197	208	341	279	136
	CC	$P_{tC.20}$	---	---	---	---	---	---	359	480	768	675	561
18	---	$Pt_{0.20}$	94	---	89	---	118	---	75	*	*	*	*
	FAN	$P_{tF.20}$	70	---	93	---	141	---	189	201	334	376	146
	CC	$P_{tC.20}$	104	---	113	---	127	---	343	458	742	734	547
20	---	$Pt_{0.20}$	91	108	88	100	114	145	95	*	18	16	*
	FAN	$P_{tF.20}$	67	78	90	93	135	155	179	233	363	412	284
	CC	$P_{tC.20}$	100	106	110	103	121	126	329	483	750	753	647
22,4	---	$Pt_{0.20}$	91	103	90	107	125	140	93	*	23	22	*
	FAN	$P_{tF.20}$	66	74	87	100	133	147	172	224	346	399	279
	CC	$P_{tC.20}$	98	101	106	110	119	120	315	460	717	730	625
25	---	$Pt_{0.20}$	88	104	88	100	120	150	105	14	85	92	*
	FAN	$P_{tF.20}$	63	73	85	88	126	145	162	229	305	356	366
	CC	$P_{tC.20}$	94	100	103	96	114	118	298	455	648	666	683
28	---	$Pt_{0.20}$	83	100	90	107	136	145	102	15	85	93	*
	FAN	$P_{tF.20}$	55	70	72	94	110	138	155	217	292	345	354
	CC	$P_{tC.20}$	82	95	88	103	99	112	285	430	621	647	656
31,5	---	$Pt_{0.20}$	80	94	88	97	131	158	132	103	221	133	237
	FAN	$P_{tF.20}$	53	61	70	73	105	121	135	168	239	309	350
	CC	$P_{tC.20}$	79	83	86	81	95	98	250	347	524	586	603
35,5	---	$Pt_{0.20}$	80	90	87	103	133	152	128	100	215	132	231
	FAN	$P_{tF.20}$	52	58	68	78	104	116	130	160	230	300	335
	CC	$P_{tC.20}$	78	79	83	86	94	94	241	331	504	570	577
40	---	$Pt_{0.20}$	77	90	85	93	128	154	128	106	219	259	256
	FAN	$P_{tF.20}$	50	58	66	69	99	115	124	155	216	257	317
	CC	$P_{tC.20}$	75	79	81	76	89	93	231	320	476	497	547
45	---	$Pt_{0.20}$	75	86	83	99	127	148	124	103	212	258	247
	FAN	$P_{tF.20}$	48	55	64	74	96	109	119	148	208	239	303
	CC	$P_{tC.20}$	72	75	78	81	87	89	222	305	458	462	524
50	---	$Pt_{0.20}$	72	84	81	89	122	146	136	147	167	253	286
	FAN	$P_{tF.20}$	47	54	62	64	92	106	99	127	152	232	258
	CC	$P_{tC.20}$	69	73	76	71	83	86	184	264	340	450	448
56	---	$Pt_{0.20}$	67	80	93	94	131	140	132	142	163	255	276
	FAN	$P_{tF.20}$	41	51	59	69	83	101	95	121	147	202	248
	CC	$P_{tC.20}$	61	70	72	76	75	82	178	253	330	391	431
63	---	$Pt_{0.20}$	65	75	90	97	126	148	129	141	161	250	276
	FAN	$P_{tF.20}$	40	46	57	59	80	92	92	118	141	197	238
	CC	$P_{tC.20}$	59	62	70	65	72	75	172	247	317	382	415
71	---	$Pt_{0.20}$	63	72	87	103	124	142	125	136	157	240	267
	FAN	$P_{tF.20}$	39	44	55	63	78	88	89	113	137	185	229
	CC	$P_{tC.20}$	57	60	67	70	70	71	166	236	307	360	399
80	---	$Pt_{0.20}$	61	70	85	91	119	139	92	109	110	235	151
	FAN	$P_{tF.20}$	37	43	53	55	74	86	77	100	128	181	205
	CC	$P_{tC.20}$	55	58	65	61	67	69	143	207	283	351	354
90	---	$Pt_{0.20}$	59	67	81	97	115	133	89	107	108	140	151
	FAN	$P_{tF.20}$	36	41	51	59	72	82	74	97	122	168	198
	CC	$P_{tC.20}$	54	56	62	65	64	66	137	200	270	321	342
100	---	$Pt_{0.20}$	57	66	79	84	110	129	87	104	105	135	146
	FAN	$P_{tF.20}$	35	40	49	51	69	79	72	93	119	158	192
	CC	$P_{tC.20}$	52	55	60	56	62	64	133	193	263	302	330

*** Additional Cooling Necessary - Consult Factory**

Nom. Ratio	Cooling Type		SK 5407/ SK 5507	SK 6407/ SK 6507	SK 7407/ SK 7507	SK 8407/ SK 8507	SK 9407/ SK 9507	SK 10407/ SK 10507	SK 11407/ SK 11507	SK 12407/ SK 12507	SK 13407/ SK 13507	SK 14407/ SK 14507	SK 15407/ SK 15507
			Thermal Power										
i_N			P_N [kW]	P_N [kW]	P_N [kW]	P_N [kW]	P_N [kW]	P_N [kW]	P_N [kW]	P_N [kW]	P_N [kW]	P_N [kW]	P_N [kW]
112	---	$Pt_{0.20}$	48	64	62	90	93	124	90	109	112	132	164
	FAN	$P_{tF.20}$	30	38	39	55	61	75	71	93	117	154	188
	CC	$P_{tC.20}$	44	52	48	60	55	61	132	193	258	296	325
125	---	$Pt_{0.20}$	47	54	61	66	90	105	87	105	109	138	159
	FAN	$P_{tF.20}$	29	33	38	40	58	67	69	90	114	149	181
	CC	$P_{tC.20}$	43	45	47	45	52	54	128	185	251	286	314
140	---	$Pt_{0.20}$	46	52	59	69	87	102	85	103	106	135	155
	FAN	$P_{tF.20}$	28	32	37	43	56	64	66	86	108	146	175
	CC	$P_{tC.20}$	42	43	45	47	50	52	122	179	239	280	303
160	---	$Pt_{0.20}$	44	51	57	62	84	98	82	99	103	128	150
	FAN	$P_{tF.20}$	27	31	36	38	54	62	64	83	105	137	169
	CC	$P_{tC.20}$	41	42	44	42	48	50	119	172	233	262	292
180	---	$Pt_{0.20}$	43	49	57	65	82	94	81	99	104	126	154
	FAN	$P_{tF.20}$	27	30	36	40	53	59	62	81	102	134	161
	CC	$P_{tC.20}$	39	41	44	44	47	48	115	168	226	257	279
200	---	$Pt_{0.20}$	42	48	56	60	79	93	79	95	102	127	149
	FAN	$P_{tF.20}$	26	29	35	37	51	58	60	78	99	128	155
	CC	$P_{tC.20}$	38	40	43	40	46	47	111	161	220	247	269
224	---	$Pt_{0.20}$	42	46	55	63	81	89	76	93	98	125	145
	FAN	$P_{tF.20}$	26	28	34	39	51	56	57	75	94	126	150
	CC	$P_{tC.20}$	38	38	42	43	46	45	106	155	208	242	260
250	---	$Pt_{0.20}$	41	47	54	58	78	91	74	89	95	118	140
	FAN	$P_{tF.20}$	25	29	33	35	49	57	56	72	92	118	145
	CC	$P_{tC.20}$	37	39	41	38	44	46	103	149	203	226	251
280	---	$Pt_{0.20}$	40	45	52	61	74	87	71	86	92	115	136
	FAN	$P_{tF.20}$	24	27	32	37	47	54	53	68	87	115	135
	CC	$P_{tC.20}$	36	37	39	41	42	44	98	142	192	221	235
315	---	$Pt_{0.20}$	38	44	50	54	71	84	69	83	90	106	131
	FAN	$P_{tF.20}$	23	27	31	33	45	52	51	66	84	107	131
	CC	$P_{tC.20}$	35	37	38	36	41	42	95	136	187	205	227
355	---	$Pt_{0.20}$	37	42	50	57	70	80	66	80	86	104	127
	FAN	$P_{tF.20}$	23	26	31	34	44	50	49	63	80	104	126
	CC	$P_{tC.20}$	34	35	38	38	40	40	90	131	177	201	219
400	---	$Pt_{0.20}$	36	42	49	52	67	79	64	77	84	104	123
	FAN	$P_{tF.20}$	22	25	30	32	42	48	47	61	78	104	122
	CC	$P_{tC.20}$	33	34	37	35	38	39	87	126	172	201	212
450	---	$Pt_{0.20}$	---	40	---	55	---	76	---	---	---	---	---
	FAN	$P_{tF.20}$	---	24	---	33	---	46	---	---	---	---	---
	CC	$P_{tC.20}$	---	33	---	37	---	38	---	---	---	---	---

Thermal Rating
M1/M3 Mounting - 1800 rpm
@ 40°C = 104°F



Nom. Ratio	Cooling Type		SK 5407/ SK 5507	SK 6407/ SK 6507	SK 7407/ SK 7507	SK 8407/ SK 8507	SK 9407/ SK 9507	SK 10407/ SK 10507	SK 11407/ SK 11507	SK 12407/ SK 12507	SK 13407/ SK 13507	SK 14407/ SK 14507	SK 15407/ SK 15507
			Thermal Power										
i_N			P_N [kW]	P_N [kW]	P_N [kW]	P_N [kW]	P_N [kW]	P_N [kW]	P_N [kW]	P_N [kW]	P_N [kW]	P_N [kW]	P_N [kW]
12,5	---	$Pt_{0.40}$	---	---	---	---	---	---	*	*	*	---	*
	FAN	$P_{tF.40}$	---	---	---	---	---	---	175	31	104	---	*
	CC	$P_{tC.20}$	---	---	---	---	---	---	387	396	660	---	227
14	---	$Pt_{0.40}$	---	---	---	---	---	---	*	*	*	*	*
	FAN	$P_{tF.40}$	---	---	---	---	---	---	173	37	114	89	*
	CC	$P_{tC.20}$	---	---	---	---	---	---	376	382	642	598	242
16	---	$Pt_{0.40}$	---	---	---	---	---	---	20	*	*	*	*
	FAN	$P_{tF.40}$	---	---	---	---	---	---	180	107	202	101	*
	CC	$P_{tC.20}$	---	---	---	---	---	---	374	429	700	593	451
18	---	$Pt_{0.40}$	77	---	66	---	83	---	23	*	*	*	*
	FAN	$P_{tF.40}$	61	---	81	---	124	---	172	106	201	227	*
	CC	$P_{tC.20}$	106	---	116	---	131	---	358	410	677	659	443
20	---	$Pt_{0.40}$	74	89	66	77	81	106	47	*	*	*	*
	FAN	$P_{tF.40}$	58	67	79	81	118	136	161	143	258	289	75
	CC	$P_{tC.20}$	102	108	113	105	125	130	340	436	706	698	551
22,4	---	$Pt_{0.40}$	75	85	69	82	92	103	47	*	*	*	*
	FAN	$P_{tF.40}$	57	64	76	87	116	129	154	139	251	286	82
	CC	$P_{tC.20}$	100	103	109	113	123	124	326	416	680	682	533
25	---	$Pt_{0.40}$	72	86	67	78	89	114	63	*	*	*	*
	FAN	$P_{tF.40}$	55	64	74	76	111	127	144	163	282	323	198
	CC	$P_{tC.20}$	96	102	106	99	117	122	306	426	678	693	597
28	---	$Pt_{0.40}$	69	82	72	83	110	110	62	*	*	*	*
	FAN	$P_{tF.40}$	47	60	62	82	96	121	138	156	273	317	194
	CC	$P_{tC.20}$	83	97	90	106	101	116	293	406	652	676	575
31,5	---	$Pt_{0.40}$	67	79	71	79	106	128	98	61	161	45	147
	FAN	$P_{tF.40}$	46	53	61	64	92	105	118	148	212	287	314
	CC	$P_{tC.20}$	80	85	87	82	97	101	255	356	537	616	624
35,5	---	$Pt_{0.40}$	67	75	70	84	108	124	95	59	157	46	144
	FAN	$P_{tF.40}$	45	50	59	67	90	101	113	142	204	278	300
	CC	$P_{tC.20}$	79	81	85	88	96	96	246	339	517	598	597
40	---	$Pt_{0.40}$	65	76	69	76	104	126	97	68	165	194	176
	FAN	$P_{tF.40}$	43	50	57	60	86	99	108	136	191	228	282
	CC	$P_{tC.20}$	76	80	83	78	91	95	235	328	487	510	564
45	---	$Pt_{0.40}$	63	72	67	81	104	121	94	66	160	199	170
	FAN	$P_{tF.40}$	42	48	55	64	84	95	104	130	184	210	270
	CC	$P_{tC.20}$	73	77	79	83	89	91	226	312	469	474	540
50	---	$Pt_{0.40}$	61	71	66	73	100	120	112	116	130	195	222
	FAN	$P_{tF.40}$	40	46	54	56	80	92	85	110	132	205	227
	CC	$P_{tC.20}$	70	75	77	72	85	88	187	269	345	462	459
56	---	$Pt_{0.40}$	57	68	79	77	111	115	109	112	128	205	215
	FAN	$P_{tF.40}$	36	44	51	59	72	88	83	105	128	177	218
	CC	$P_{tC.20}$	62	71	73	77	77	84	181	257	335	400	442
63	---	$Pt_{0.40}$	55	64	77	82	107	126	107	113	127	201	218
	FAN	$P_{tF.40}$	34	39	49	51	69	80	80	102	123	173	210
	CC	$P_{tC.20}$	60	63	71	67	73	76	175	251	322	391	425
71	---	$Pt_{0.40}$	53	61	74	88	105	121	104	108	124	195	210
	FAN	$P_{tF.40}$	33	38	47	55	67	76	77	98	119	162	202
	CC	$P_{tC.20}$	58	61	68	71	71	73	169	240	312	368	409
80	---	$Pt_{0.40}$	52	60	72	77	101	118	73	84	78	191	98
	FAN	$P_{tF.40}$	32	37	46	48	64	74	67	87	112	159	184
	CC	$P_{tC.20}$	56	59	66	62	68	71	145	211	289	359	366
90	---	$Pt_{0.40}$	51	57	69	82	98	114	71	83	78	97	100
	FAN	$P_{tF.40}$	31	35	44	51	62	71	64	85	108	150	177
	CC	$P_{tC.20}$	55	57	63	66	66	68	140	204	276	332	353
100	---	$Pt_{0.40}$	49	57	67	72	94	110	69	81	76	94	97
	FAN	$P_{tF.40}$	30	35	43	44	59	68	62	82	105	141	172
	CC	$P_{tC.20}$	53	56	61	57	63	65	135	197	269	312	342

*** Additional Cooling Necessary - Consult Factory**

Nom. Ratio	Cooling Type		SK 5407/ SK 5507	SK 6407/ SK 6507	SK 7407/ SK 7507	SK 8407/ SK 8507	SK 9407/ SK 9507	SK 10407/ SK 10507	SK 11407/ SK 11507	SK 12407/ SK 12507	SK 13407/ SK 13507	SK 14407/ SK 14507	SK 15407/ SK 15507
			Thermal Power										
i_N			P_N [kW]	P_N [kW]	P_N [kW]	P_N [kW]	P_N [kW]	P_N [kW]	P_N [kW]	P_N [kW]	P_N [kW]	P_N [kW]	P_N [kW]
112	---	$Pt_{0.40}$	41	54	53	77	79	105	72	86	83	93	117
	FAN	$P_{tF.40}$	26	33	34	47	53	65	62	81	102	138	167
	CC	$P_{tC.20}$	45	53	49	61	56	62	135	197	264	305	335
125	---	$Pt_{0.40}$	40	46	52	56	76	89	70	83	81	100	113
	FAN	$P_{tF.40}$	25	28	33	35	51	58	60	78	100	133	161
	CC	$P_{tC.20}$	44	46	48	45	54	55	131	189	257	295	323
140	---	$Pt_{0.40}$	39	44	50	59	73	86	68	81	79	98	111
	FAN	$P_{tF.40}$	24	27	32	37	49	56	58	75	95	130	155
	CC	$P_{tC.20}$	43	44	46	48	51	53	125	182	244	289	312
160	---	$Pt_{0.40}$	38	43	49	53	71	83	66	78	77	94	108
	FAN	$P_{tF.40}$	24	27	31	33	47	53	56	73	93	122	150
	CC	$P_{tC.20}$	41	43	45	43	49	51	121	175	238	270	301
180	---	$Pt_{0.40}$	37	42	48	55	70	80	66	79	79	92	114
	FAN	$P_{tF.40}$	23	26	31	35	46	51	54	71	89	119	142
	CC	$P_{tC.20}$	40	42	45	45	48	49	117	171	231	265	287
200	---	$Pt_{0.40}$	35	41	47	51	67	79	64	76	77	95	110
	FAN	$P_{tF.40}$	22	25	30	32	44	50	52	68	87	114	138
	CC	$P_{tC.20}$	39	41	44	41	47	48	114	164	224	254	277
224	---	$Pt_{0.40}$	36	39	47	54	68	76	62	74	75	93	107
	FAN	$P_{tF.40}$	22	24	30	34	45	48	50	65	83	112	133
	CC	$P_{tC.20}$	39	39	43	44	47	46	109	158	213	249	267
250	---	$Pt_{0.40}$	35	40	46	49	66	77	60	72	73	88	104
	FAN	$P_{tF.40}$	21	25	29	30	43	49	49	63	81	105	128
	CC	$P_{tC.20}$	38	40	41	39	45	47	105	152	207	233	258
280	---	$Pt_{0.40}$	34	39	44	52	63	74	58	69	71	86	102
	FAN	$P_{tF.40}$	21	24	28	32	41	47	46	60	76	102	119
	CC	$P_{tC.20}$	37	38	40	41	43	45	100	144	196	228	241
315	---	$Pt_{0.40}$	33	38	43	46	61	71	56	67	69	79	99
	FAN	$P_{tF.40}$	20	23	27	28	39	45	44	57	74	94	115
	CC	$P_{tC.20}$	35	37	39	36	42	43	96	139	191	211	233
355	---	$Pt_{0.40}$	32	36	43	49	59	68	54	65	66	78	96
	FAN	$P_{tF.40}$	20	22	27	30	38	43	42	55	70	93	111
	CC	$P_{tC.20}$	34	36	39	39	41	41	92	134	181	207	225
400	---	$Pt_{0.40}$	31	35	42	45	57	67	52	62	65	78	93
	FAN	$P_{tF.40}$	19	22	26	27	37	42	41	53	69	93	108
	CC	$P_{tC.20}$	33	35	38	35	39	40	89	128	176	207	217
450	---	$Pt_{0.40}$	---	34	---	47	---	64	---	---	---	---	---
	FAN	$P_{tF.40}$	---	21	---	29	---	40	---	---	---	---	---
	CC	$P_{tC.20}$	---	33	---	38	---	39	---	---	---	---	---

Thermal Rating
M5 Mounting - 1000 rpm
@ 20°C = 68°F



Nom. Ratio	Cooling Type		SK 5407/ SK 5507	SK 6407/ SK 6507	SK 7407/ SK 7507	SK 8407/ SK 8507	SK 9407/ SK 9507	SK 10407/ SK 10507	SK 11407/ SK 11507	SK 12407/ SK 12507	SK 13407/ SK 13507	SK 14407/ SK 14507	SK 15407/ SK 15507
			Thermal Power										
i_N			P_N [kW]	P_N [kW]	P_N [kW]	P_N [kW]	P_N [kW]	P_N [kW]	P_N [kW]	P_N [kW]	P_N [kW]	P_N [kW]	P_N [kW]
12,5	---	$Pt_{0.20}$	---	---	---	---	---	---	*	*	*	---	*
	FAN	$P_{tF.20}$	---	---	---	---	---	---	186	123	92	---	*
	CC	$P_{tC.20}$	---	---	---	---	---	---	341	385	517	---	*
14	---	$Pt_{0.20}$	---	---	---	---	---	---	*	*	*	*	*
	FAN	$P_{tF.20}$	---	---	---	---	---	---	182	123	101	69	*
	CC	$P_{tC.20}$	---	---	---	---	---	---	330	370	504	449	*
16	---	$Pt_{0.20}$	---	---	---	---	---	---	25	*	*	*	*
	FAN	$P_{tF.20}$	---	---	---	---	---	---	181	168	173	84	*
	CC	$P_{tC.20}$	---	---	---	---	---	---	323	405	554	448	77
18	---	$Pt_{0.20}$	77	---	84	---	102	---	27	*	*	*	*
	FAN	$P_{tF.20}$	61	---	80	---	122	---	173	163	173	190	*
	CC	$P_{tC.20}$	90	---	97	---	110	---	308	386	535	509	92
20	---	$Pt_{0.20}$	74	88	82	92	99	125	48	*	*	*	*
	FAN	$P_{tF.20}$	58	68	78	80	116	134	163	188	220	242	*
	CC	$P_{tC.20}$	86	91	94	88	104	108	293	405	561	542	220
22,4	---	$Pt_{0.20}$	74	84	83	98	106	121	48	*	*	*	*
	FAN	$P_{tF.20}$	57	64	75	86	115	127	155	180	215	240	*
	CC	$P_{tC.20}$	84	87	91	94	103	103	279	384	541	531	219
25	---	$Pt_{0.20}$	71	85	81	90	102	128	62	*	*	*	*
	FAN	$P_{tF.20}$	55	64	73	75	109	126	145	195	240	271	*
	CC	$P_{tC.20}$	81	86	88	82	98	102	263	390	541	542	297
28	---	$Pt_{0.20}$	71	81	86	96	125	123	60	*	*	*	*
	FAN	$P_{tF.20}$	47	60	62	81	95	119	139	186	232	266	*
	CC	$P_{tC.20}$	70	81	76	88	85	96	252	370	520	530	289
31,5	---	$Pt_{0.20}$	69	81	84	91	120	144	117	125	196	*	166
	FAN	$P_{tF.20}$	46	53	60	63	90	104	118	145	203	277	306
	CC	$P_{tC.20}$	67	72	74	69	81	84	217	298	442	519	520
35,5	---	$Pt_{0.20}$	68	77	83	97	122	138	113	120	190	0	162
	FAN	$P_{tF.20}$	45	50	59	67	89	99	113	138	195	272	292
	CC	$P_{tC.20}$	67	68	71	74	80	80	208	283	425	506	496
40	---	$Pt_{0.20}$	66	77	80	87	117	139	113	124	193	229	187
	FAN	$P_{tF.20}$	43	50	57	59	85	98	108	133	184	218	276
	CC	$P_{tC.20}$	64	68	69	65	76	79	200	275	401	417	470
45	---	$Pt_{0.20}$	64	73	78	93	115	133	109	119	187	227	181
	FAN	$P_{tF.20}$	42	48	55	63	83	94	104	127	177	203	264
	CC	$P_{tC.20}$	62	64	66	69	74	76	191	261	386	389	450
50	---	$Pt_{0.20}$	62	72	76	82	110	131	121	141	159	222	247
	FAN	$P_{tF.20}$	40	46	53	55	79	91	86	110	133	197	219
	CC	$P_{tC.20}$	59	63	65	60	70	73	160	229	297	378	378
56	---	$Pt_{0.20}$	58	69	81	88	114	125	117	135	155	228	239
	FAN	$P_{tF.20}$	36	44	50	59	71	87	83	105	129	170	211
	CC	$P_{tC.20}$	53	60	61	65	64	70	154	218	287	327	363
63	---	$Pt_{0.20}$	56	64	79	84	109	128	115	134	152	223	238
	FAN	$P_{tF.20}$	34	39	48	50	68	79	80	103	124	166	203
	CC	$P_{tC.20}$	51	54	59	55	61	63	149	213	275	320	350
71	---	$Pt_{0.20}$	54	62	76	90	107	122	111	129	148	214	230
	FAN	$P_{tF.20}$	33	38	47	54	66	75	77	98	120	156	195
	CC	$P_{tC.20}$	49	51	57	59	60	61	143	203	267	301	336
80	---	$Pt_{0.20}$	52	60	74	79	102	120	98	120	140	209	211
	FAN	$P_{tF.20}$	32	37	45	47	64	73	65	84	107	153	164
	CC	$P_{tC.20}$	47	50	55	51	57	59	120	174	236	294	283
90	---	$Pt_{0.20}$	51	58	71	84	99	115	95	118	136	180	208
	FAN	$P_{tF.20}$	31	35	43	50	61	70	62	81	102	134	158
	CC	$P_{tC.20}$	46	48	52	55	55	56	115	168	225	257	273
100	---	$Pt_{0.20}$	49	57	69	73	95	111	92	113	133	172	201
	FAN	$P_{tF.20}$	30	35	42	43	58	67	60	78	99	126	153
	CC	$P_{tC.20}$	44	47	51	47	52	54	111	161	219	241	264

*** Additional Cooling Necessary - Consult Factory**

Nom. Ratio	Cooling Type		SK 5407/ SK 5507	SK 6407/ SK 6507	SK 7407/ SK 7507	SK 8407/ SK 8507	SK 9407/ SK 9507	SK 10407/ SK 10507	SK 11407/ SK 11507	SK 12407/ SK 12507	SK 13407/ SK 13507	SK 14407/ SK 14507	SK 15407/ SK 15507
			Thermal Power										
i_N			P_N [kW]	P_N [kW]	P_N [kW]	P_N [kW]	P_N [kW]	P_N [kW]	P_N [kW]	P_N [kW]	P_N [kW]	P_N [kW]	P_N [kW]
112	---	$Pt_{0.20}$	43	54	56	78	85	106	93	116	135	168	208
	FAN	$P_{tF.20}$	25	33	33	46	51	64	60	79	98	123	152
	CC	$P_{tC.20}$	38	45	41	51	46	52	111	162	216	236	262
125	---	$Pt_{0.20}$	41	47	55	58	81	95	90	112	131	168	201
	FAN	$P_{tF.20}$	25	28	33	34	49	56	58	75	95	120	146
	CC	$P_{tC.20}$	36	38	40	38	44	45	108	156	210	230	253
140	---	$Pt_{0.20}$	40	46	53	62	78	91	87	109	126	164	196
	FAN	$P_{tF.20}$	24	27	31	36	47	54	56	73	90	117	141
	CC	$P_{tC.20}$	36	37	38	40	42	44	103	149	199	225	244
160	---	$Pt_{0.20}$	39	45	51	55	75	88	84	104	123	155	189
	FAN	$P_{tF.20}$	23	27	31	32	45	52	54	70	88	110	136
	CC	$P_{tC.20}$	34	36	37	35	41	42	99	143	193	210	236
180	---	$Pt_{0.20}$	38	43	51	58	74	84	83	103	121	152	185
	FAN	$P_{tF.20}$	23	26	31	34	44	50	52	68	85	107	131
	CC	$P_{tC.20}$	33	35	37	37	40	40	97	141	188	206	226
200	---	$Pt_{0.20}$	37	42	50	53	71	83	80	99	117	149	179
	FAN	$P_{tF.20}$	22	25	30	31	43	49	51	65	83	103	126
	CC	$P_{tC.20}$	32	34	36	34	38	39	94	135	183	199	218
224	---	$Pt_{0.20}$	37	41	49	56	73	80	77	96	112	146	173
	FAN	$P_{tF.20}$	22	24	29	33	43	47	48	63	78	101	122
	CC	$P_{tC.20}$	33	33	35	36	39	38	89	129	173	195	211
250	---	$Pt_{0.20}$	36	41	48	51	70	81	74	92	109	137	167
	FAN	$P_{tF.20}$	21	24	28	30	42	48	47	60	76	94	117
	CC	$P_{tC.20}$	31	33	34	32	37	39	86	124	168	181	203
280	---	$Pt_{0.20}$	35	40	46	54	67	78	71	88	104	134	158
	FAN	$P_{tF.20}$	21	23	27	31	40	46	44	57	72	92	111
	CC	$P_{tC.20}$	31	32	33	34	36	37	82	119	160	177	192
315	---	$Pt_{0.20}$	34	39	45	47	64	74	68	84	101	124	153
	FAN	$P_{tF.20}$	20	23	26	27	38	44	43	55	70	86	107
	CC	$P_{tC.20}$	29	31	32	30	34	35	79	114	156	166	185
355	---	$Pt_{0.20}$	33	37	45	50	63	71	66	82	97	121	148
	FAN	$P_{tF.20}$	19	22	26	29	37	42	41	53	67	85	103
	CC	$P_{tC.20}$	29	30	32	32	33	34	75	109	147	163	178
400	---	$Pt_{0.20}$	32	36	43	46	60	70	64	79	94	121	143
	FAN	$P_{tF.20}$	19	21	26	27	36	41	40	51	65	85	99
	CC	$P_{tC.20}$	28	29	31	29	32	33	73	105	143	163	172
450	---	$Pt_{0.20}$	---	35	---	49	---	67	---	---	---	---	---
	FAN	$P_{tF.20}$	---	20	---	28	---	39	---	---	---	---	---
	CC	$P_{tC.20}$	---	28	---	31	---	32	---	---	---	---	---

Thermal Rating
M5 Mounting - 1000 rpm
@ 40°C = 104°F



Nom. Ratio	Cooling Type		SK 5407/ SK 5507	SK 6407/ SK 6507	SK 7407/ SK 7507	SK 8407/ SK 8507	SK 9407/ SK 9507	SK 10407/ SK 10507	SK 11407/ SK 11507	SK 12407/ SK 12507	SK 13407/ SK 13507	SK 14407/ SK 14507	SK 15407/ SK 15507
			Thermal Power										
i_N			P_N [kW]	P_N [kW]	P_N [kW]	P_N [kW]	P_N [kW]	P_N [kW]	P_N [kW]	P_N [kW]	P_N [kW]	P_N [kW]	P_N [kW]
12,5	---	$Pt_{0.40}$	---	---	---	---	---	---	*	*	*	---	*
	FAN	$P_{tF.40}$	---	---	---	---	---	---	115	16	*	---	*
	CC	$P_{tC.20}$	---	---	---	---	---	---	304	337	453	---	*
14	---	$Pt_{0.40}$	---	---	---	---	---	---	*	*	*	*	*
	FAN	$P_{tF.40}$	---	---	---	---	---	---	115	23	*	*	*
	CC	$P_{tC.20}$	---	---	---	---	---	---	295	325	443	375	*
16	---	$Pt_{0.40}$	---	---	---	---	---	---	*	*	*	*	*
	FAN	$P_{tF.40}$	---	---	---	---	---	---	142	80	33	*	*
	CC	$P_{tC.20}$	---	---	---	---	---	---	313	361	495	376	*
18	---	$Pt_{0.40}$	62	---	64	---	72	---	*	*	*	*	*
	FAN	$P_{tF.40}$	53	---	70	---	107	---	138	80	41	41	*
	CC	$P_{tC.20}$	92	---	100	---	113	---	302	345	479	444	*
20	---	$Pt_{0.40}$	60	72	63	72	70	92	1	*	*	*	*
	FAN	$P_{tF.40}$	50	59	68	70	102	117	151	109	105	112	*
	CC	$P_{tC.20}$	88	93	97	90	108	112	308	365	508	481	121
22,4	---	$Pt_{0.40}$	60	68	65	77	78	90	3	*	*	*	*
	FAN	$P_{tF.40}$	50	55	65	75	100	111	144	105	105	114	*
	CC	$P_{tC.20}$	86	88	93	97	106	106	294	347	490	472	126
25	---	$Pt_{0.40}$	58	70	63	71	76	98	22	*	*	*	*
	FAN	$P_{tF.40}$	47	55	63	65	95	110	132	124	141	156	*
	CC	$P_{tC.20}$	83	88	91	84	101	105	274	354	494	486	216
28	---	$Pt_{0.40}$	60	66	71	77	103	94	23	*	*	*	*
	FAN	$P_{tF.40}$	41	52	54	70	82	104	126	119	138	155	*
	CC	$P_{tC.20}$	72	83	77	91	87	99	262	336	475	475	211
31,5	---	$Pt_{0.40}$	58	68	69	76	99	119	88	90	147	*	87
	FAN	$P_{tF.40}$	39	46	52	54	78	90	103	126	179	177	277
	CC	$P_{tC.20}$	69	73	75	70	83	86	222	304	453	469	541
35,5	---	$Pt_{0.40}$	58	65	69	81	100	114	86	87	143	0	87
	FAN	$P_{tF.40}$	39	43	51	58	77	86	98	120	172	174	264
	CC	$P_{tC.20}$	68	69	73	75	82	82	213	289	436	457	517
40	---	$Pt_{0.40}$	55	65	67	73	96	116	87	92	149	176	118
	FAN	$P_{tF.40}$	37	43	49	51	74	85	94	116	161	192	246
	CC	$P_{tC.20}$	65	69	71	66	78	81	204	280	411	428	487
45	---	$Pt_{0.40}$	54	62	65	77	95	111	84	88	144	179	115
	FAN	$P_{tF.40}$	36	41	47	55	71	81	90	110	155	178	235
	CC	$P_{tC.20}$	63	66	68	71	76	77	195	266	395	398	465
50	---	$Pt_{0.40}$	52	61	63	69	91	109	101	115	128	175	195
	FAN	$P_{tF.40}$	34	40	46	48	68	79	74	95	115	173	192
	CC	$P_{tC.20}$	60	64	66	62	72	75	162	232	301	387	387
56	---	$Pt_{0.40}$	49	58	69	73	97	105	97	111	125	188	188
	FAN	$P_{tF.40}$	31	38	43	51	62	75	72	91	112	149	185
	CC	$P_{tC.20}$	54	61	62	66	65	71	157	222	292	335	372
63	---	$Pt_{0.40}$	47	55	67	72	93	109	96	110	123	184	190
	FAN	$P_{tF.40}$	29	34	42	44	59	68	69	89	107	145	178
	CC	$P_{tC.20}$	52	54	60	56	62	65	151	216	280	327	358
71	---	$Pt_{0.40}$	46	52	65	77	91	104	93	106	120	177	183
	FAN	$P_{tF.40}$	29	32	40	46	57	65	67	85	104	137	171
	CC	$P_{tC.20}$	50	52	58	60	61	62	146	206	271	308	344
80	---	$Pt_{0.40}$	44	51	63	67	87	102	82	100	115	173	172
	FAN	$P_{tF.40}$	28	32	39	41	55	63	56	73	93	133	143
	CC	$P_{tC.20}$	48	51	56	53	58	60	122	177	240	300	290
90	---	$Pt_{0.40}$	43	49	60	72	84	98	80	98	112	148	170
	FAN	$P_{tF.40}$	27	30	37	43	53	60	54	71	88	117	138
	CC	$P_{tC.20}$	47	49	53	56	56	58	117	171	229	263	280
100	---	$Pt_{0.40}$	42	49	59	62	81	95	77	95	110	142	165
	FAN	$P_{tF.40}$	26	30	36	37	50	58	52	68	86	110	134
	CC	$P_{tC.20}$	45	48	52	48	53	55	113	164	223	247	270

*** Additional Cooling Necessary - Consult Factory**

Nom. Ratio	Cooling Type		SK 5407/ SK 5507	SK 6407/ SK 6507	SK 7407/ SK 7507	SK 8407/ SK 8507	SK 9407/ SK 9507	SK 10407/ SK 10507	SK 11407/ SK 11507	SK 12407/ SK 12507	SK 13407/ SK 13507	SK 14407/ SK 14507	SK 15407/ SK 15507
			Thermal Power										
i_N			P_N [kW]	P_N [kW]	P_N [kW]	P_N [kW]	P_N [kW]	P_N [kW]	P_N [kW]	P_N [kW]	P_N [kW]	P_N [kW]	P_N [kW]
112	---	$Pt_{0.40}$	37	46	48	67	73	91	79	98	112	139	172
	FAN	$P_{tF.40}$	22	28	29	40	44	56	52	68	85	108	132
	CC	$P_{tC.20}$	38	46	41	52	47	53	113	165	220	242	268
125	---	$Pt_{0.40}$	35	41	47	50	70	81	76	94	109	139	167
	FAN	$P_{tF.40}$	21	24	28	30	42	49	50	65	82	105	128
	CC	$P_{tC.20}$	37	39	40	38	45	46	110	158	214	235	259
140	---	$Pt_{0.40}$	35	39	45	53	67	78	74	92	105	137	162
	FAN	$P_{tF.40}$	21	23	27	31	41	47	48	63	78	103	123
	CC	$P_{tC.20}$	36	37	39	40	43	45	105	152	203	230	249
160	---	$Pt_{0.40}$	34	38	44	47	65	75	71	88	102	129	157
	FAN	$P_{tF.40}$	20	23	26	28	39	45	47	60	76	96	119
	CC	$P_{tC.20}$	35	37	38	36	41	43	101	146	197	215	241
180	---	$Pt_{0.40}$	33	37	44	50	64	72	70	87	101	126	154
	FAN	$P_{tF.40}$	19	22	26	29	38	43	45	59	74	94	114
	CC	$P_{tC.20}$	34	35	38	38	41	41	99	143	192	211	231
200	---	$Pt_{0.40}$	32	36	43	46	61	71	68	83	98	124	149
	FAN	$P_{tF.40}$	19	22	26	27	37	42	44	57	72	90	110
	CC	$P_{tC.20}$	33	35	37	35	39	40	95	137	186	203	223
224	---	$Pt_{0.40}$	32	35	42	48	62	68	65	81	94	122	145
	FAN	$P_{tF.40}$	19	21	25	28	38	40	42	54	68	89	106
	CC	$P_{tC.20}$	33	33	36	37	40	39	91	132	176	199	215
250	---	$Pt_{0.40}$	31	35	41	44	60	70	63	78	91	114	140
	FAN	$P_{tF.40}$	18	21	24	25	36	41	40	52	66	83	102
	CC	$P_{tC.20}$	32	34	35	33	38	39	88	126	171	185	207
280	---	$Pt_{0.40}$	30	34	39	46	57	67	60	74	87	112	133
	FAN	$P_{tF.40}$	18	20	23	27	34	40	38	50	63	81	96
	CC	$P_{tC.20}$	31	32	34	35	36	38	83	121	163	182	195
315	---	$Pt_{0.40}$	29	33	38	41	55	64	58	71	85	103	128
	FAN	$P_{tF.40}$	17	20	23	24	33	38	37	48	61	75	93
	CC	$P_{tC.20}$	30	32	33	31	35	36	81	116	158	170	189
355	---	$Pt_{0.40}$	28	32	38	43	54	61	56	69	81	101	124
	FAN	$P_{tF.40}$	17	19	23	25	32	36	35	46	58	74	90
	CC	$P_{tC.20}$	29	30	33	33	34	34	77	111	150	166	182
400	---	$Pt_{0.40}$	27	31	37	40	52	60	54	67	79	101	120
	FAN	$P_{tF.40}$	16	18	22	23	31	35	34	44	56	74	87
	CC	$P_{tC.20}$	28	30	32	30	33	34	74	107	146	166	176
450	---	$Pt_{0.40}$	---	30	---	42	---	58	---	---	---	---	---
	FAN	$P_{tF.40}$	---	18	---	24	---	34	---	---	---	---	---
	CC	$P_{tC.20}$	---	28	---	32	---	32	---	---	---	---	---

Thermal Rating
M5 Mounting - 1200 rpm
@ 20°C = 68°F



Nom. Ratio	Cooling Type		SK 5407/ SK 5507	SK 6407/ SK 6507	SK 7407/ SK 7507	SK 8407/ SK 8507	SK 9407/ SK 9507	SK 10407/ SK 10507	SK 11407/ SK 11507	SK 12407/ SK 12507	SK 13407/ SK 13507	SK 14407/ SK 14507	SK 15407/ SK 15507
			Thermal Power										
i_N			P_N [kW]	P_N [kW]	P_N [kW]	P_N [kW]	P_N [kW]	P_N [kW]	P_N [kW]	P_N [kW]	P_N [kW]	P_N [kW]	P_N [kW]
12,5	---	$Pt_{0.20}$	---	---	---	---	---	---	*	*	*	---	*
	FAN	$P_{tF.20}$	---	---	---	---	---	---	64	*	*	---	*
	CC	$P_{tC.20}$	---	---	---	---	---	---	242	206	237	---	*
14	---	$Pt_{0.20}$	---	---	---	---	---	---	*	*	*	*	*
	FAN	$P_{tF.20}$	---	---	---	---	---	---	69	*	*	*	*
	CC	$P_{tC.20}$	---	---	---	---	---	---	238	205	242	89	*
16	---	$Pt_{0.20}$	---	---	---	---	---	---	*	*	*	*	*
	FAN	$P_{tF.20}$	---	---	---	---	---	---	115	*	*	*	*
	CC	$P_{tC.20}$	---	---	---	---	---	---	273	268	336	109	*
18	---	$Pt_{0.20}$	69	---	66	---	62	---	*	*	*	*	*
	FAN	$P_{tF.20}$	65	---	86	---	134	---	114	*	*	*	*
	CC	$P_{tC.20}$	96	---	104	---	121	---	264	258	332	262	*
20	---	$Pt_{0.20}$	66	80	65	76	61	87	*	*	*	*	*
	FAN	$P_{tF.20}$	62	72	84	86	128	146	138	42	0	0	*
	CC	$P_{tC.20}$	92	97	101	94	115	118	282	293	392	337	*
22,4	---	$Pt_{0.20}$	67	77	68	82	74	85	*	*	*	*	*
	FAN	$P_{tF.20}$	61	68	81	92	125	139	135	44	*	*	*
	CC	$P_{tC.20}$	90	92	98	101	112	112	272	281	381	334	*
25	---	$Pt_{0.20}$	65	78	67	77	71	97	*	*	*	*	*
	FAN	$P_{tF.20}$	58	68	78	81	119	136	149	80	53	44	*
	CC	$P_{tC.20}$	86	92	95	88	107	110	278	301	411	379	*
28	---	$Pt_{0.20}$	71	75	82	83	117	94	*	*	*	*	*
	FAN	$P_{tF.20}$	50	64	66	86	101	129	144	78	55	49	*
	CC	$P_{tC.20}$	74	87	80	95	90	105	267	286	397	372	*
31,5	---	$Pt_{0.20}$	68	80	80	88	113	136	89	84	142	*	*
	FAN	$P_{tF.20}$	48	56	64	67	96	111	127	156	223	106	369
	CC	$P_{tC.20}$	71	76	78	73	86	89	232	319	480	389	604
35,5	---	$Pt_{0.20}$	68	76	79	94	115	131	86	82	139	*	3
	FAN	$P_{tF.20}$	47	53	62	71	95	106	122	149	214	106	355
	CC	$P_{tC.20}$	70	72	75	78	85	85	223	303	462	381	579
40	---	$Pt_{0.20}$	65	77	78	85	111	134	90	90	152	179	68
	FAN	$P_{tF.20}$	46	53	60	63	90	104	116	143	200	239	317
	CC	$P_{tC.20}$	67	72	73	69	81	84	213	293	434	453	529
45	---	$Pt_{0.20}$	64	73	76	90	110	128	87	87	148	189	68
	FAN	$P_{tF.20}$	44	50	58	67	88	99	111	136	193	220	302
	CC	$P_{tC.20}$	65	68	70	73	78	80	204	279	417	420	506
50	---	$Pt_{0.20}$	61	72	74	81	105	127	117	131	142	185	206
	FAN	$P_{tF.20}$	42	49	56	58	84	96	91	117	141	214	238
	CC	$P_{tC.20}$	63	66	68	64	75	78	168	241	313	408	408
56	---	$Pt_{0.20}$	59	69	83	86	115	122	113	126	139	213	200
	FAN	$P_{tF.20}$	37	46	53	62	75	92	88	111	137	183	229
	CC	$P_{tC.20}$	55	63	64	68	67	74	162	230	303	350	392
63	---	$Pt_{0.20}$	57	66	81	86	111	130	111	126	138	208	206
	FAN	$P_{tF.20}$	36	42	51	53	72	83	85	109	131	178	219
	CC	$P_{tC.20}$	53	56	62	58	65	67	157	225	290	342	377
71	---	$Pt_{0.20}$	55	63	78	92	109	125	108	121	135	202	199
	FAN	$P_{tF.20}$	35	40	49	57	70	79	82	104	127	168	211
	CC	$P_{tC.20}$	52	54	60	62	63	64	151	214	281	322	362
80	---	$Pt_{0.20}$	53	62	76	81	104	123	96	116	131	198	192
	FAN	$P_{tF.20}$	34	39	48	50	67	77	69	89	113	164	176
	CC	$P_{tC.20}$	50	53	58	54	60	62	127	184	250	314	304
90	---	$Pt_{0.20}$	52	59	72	86	101	117	94	115	128	168	191
	FAN	$P_{tF.20}$	33	37	45	53	65	74	66	86	108	144	170
	CC	$P_{tC.20}$	49	50	55	58	58	60	121	177	238	275	293
100	---	$Pt_{0.20}$	50	58	70	75	97	114	91	110	125	161	185
	FAN	$P_{tF.20}$	32	37	44	46	62	71	64	83	105	135	165
	CC	$P_{tC.20}$	47	50	54	50	55	57	118	171	232	258	283

*** Additional Cooling Necessary - Consult Factory**

Nom. Ratio	Cooling Type		SK 5407/ SK 5507	SK 6407/ SK 6507	SK 7407/ SK 7507	SK 8407/ SK 8507	SK 9407/ SK 9507	SK 10407/ SK 10507	SK 11407/ SK 11507	SK 12407/ SK 12507	SK 13407/ SK 13507	SK 14407/ SK 14507	SK 15407/ SK 15507
			Thermal Power										
i_N			P_N [kW]	P_N [kW]	P_N [kW]	P_N [kW]	P_N [kW]	P_N [kW]	P_N [kW]	P_N [kW]	P_N [kW]	P_N [kW]	P_N [kW]
112	---	$Pt_{0.20}$	44	56	58	80	87	109	93	114	129	158	197
	FAN	$P_{tF.20}$	27	35	35	49	54	68	64	83	103	132	162
	CC	$P_{tC.20}$	40	47	43	54	48	55	117	171	229	253	280
125	---	$Pt_{0.20}$	43	49	56	61	84	98	90	110	125	160	191
	FAN	$P_{tF.20}$	26	30	34	36	52	60	62	80	101	128	157
	CC	$P_{tC.20}$	38	40	42	40	47	48	114	164	222	246	270
140	---	$Pt_{0.20}$	42	47	54	64	81	94	87	107	121	157	186
	FAN	$P_{tF.20}$	25	28	33	38	50	57	59	77	96	126	151
	CC	$P_{tC.20}$	37	39	40	42	45	46	108	158	211	241	261
160	---	$Pt_{0.20}$	40	46	53	57	78	91	84	103	118	148	180
	FAN	$P_{tF.20}$	24	28	32	34	48	55	57	74	93	118	146
	CC	$P_{tC.20}$	36	38	39	37	43	44	105	152	205	225	252
180	---	$Pt_{0.20}$	39	45	53	60	77	87	83	102	117	145	178
	FAN	$P_{tF.20}$	24	27	32	36	47	53	55	72	90	115	140
	CC	$P_{tC.20}$	35	36	39	39	42	42	102	149	199	220	241
200	---	$Pt_{0.20}$	38	44	52	55	74	86	80	98	114	143	172
	FAN	$P_{tF.20}$	23	26	31	33	45	52	53	69	88	111	135
	CC	$P_{tC.20}$	34	36	38	36	40	42	99	143	194	213	233
224	---	$Pt_{0.20}$	38	42	51	58	75	82	77	95	109	141	167
	FAN	$P_{tF.20}$	23	25	31	35	46	49	51	66	83	109	130
	CC	$P_{tC.20}$	34	34	37	38	41	40	94	137	183	208	224
250	---	$Pt_{0.20}$	37	43	49	53	72	84	75	92	106	132	162
	FAN	$P_{tF.20}$	22	26	30	31	44	50	49	64	81	101	125
	CC	$P_{tC.20}$	33	35	36	34	39	41	91	131	178	194	217
280	---	$Pt_{0.20}$	36	41	48	56	69	81	71	88	101	130	154
	FAN	$P_{tF.20}$	22	25	29	33	42	48	47	61	77	99	118
	CC	$P_{tC.20}$	32	33	35	36	38	39	87	125	169	190	204
315	---	$Pt_{0.20}$	35	40	46	49	66	77	69	84	99	119	149
	FAN	$P_{tF.20}$	21	24	28	29	40	46	45	58	75	92	114
	CC	$P_{tC.20}$	31	33	34	32	36	37	84	120	165	177	197
355	---	$Pt_{0.20}$	34	39	46	52	65	74	66	82	94	117	144
	FAN	$P_{tF.20}$	20	23	28	31	39	44	43	56	71	90	110
	CC	$P_{tC.20}$	30	31	34	34	35	36	80	116	156	174	190
400	---	$Pt_{0.20}$	33	38	45	48	62	73	64	79	92	117	139
	FAN	$P_{tF.20}$	20	23	27	28	38	43	42	54	69	90	106
	CC	$P_{tC.20}$	29	31	33	31	34	35	77	111	152	174	183
450	---	$Pt_{0.20}$	---	36	---	51	---	70	---	---	---	---	---
	FAN	$P_{tF.20}$	---	22	---	30	---	41	---	---	---	---	---
	CC	$P_{tC.20}$	---	29	---	33	---	33	---	---	---	---	---

Thermal Rating
M5 Mounting - 1200 rpm
@ 40°C = 104°F



Nom. Ratio	Cooling Type		SK 5407/ SK 5507	SK 6407/ SK 6507	SK 7407/ SK 7507	SK 8407/ SK 8507	SK 9407/ SK 9507	SK 10407/ SK 10507	SK 11407/ SK 11507	SK 12407/ SK 12507	SK 13407/ SK 13507	SK 14407/ SK 14507	SK 15407/ SK 15507
			Thermal Power										
i_N			P_N [kW]	P_N [kW]	P_N [kW]	P_N [kW]	P_N [kW]	P_N [kW]	P_N [kW]	P_N [kW]	P_N [kW]	P_N [kW]	P_N [kW]
12,5	---	$Pt_{0.40}$	---	---	---	---	---	---	*	*	*	---	*
	FAN	$P_{tF.40}$	---	---	---	---	---	---	*	*	*	---	*
	CC	$P_{tC.20}$	---	---	---	---	---	---	201	151	156	---	*
14	---	$Pt_{0.40}$	---	---	---	---	---	---	*	*	*	*	*
	FAN	$P_{tF.40}$	---	---	---	---	---	---	*	*	*	*	*
	CC	$P_{tC.20}$	---	---	---	---	---	---	198	152	166	*	*
16	---	$Pt_{0.40}$	---	---	---	---	---	---	*	*	*	*	*
	FAN	$P_{tF.40}$	---	---	---	---	---	---	37	*	*	*	*
	CC	$P_{tC.20}$	---	---	---	---	---	---	235	219	267	*	*
18	---	$Pt_{0.40}$	53	---	44	---	26	---	*	*	*	*	*
	FAN	$P_{tF.40}$	56	---	76	---	121	---	41	*	*	*	*
	CC	$P_{tC.20}$	98	---	108	---	128	---	229	212	266	183	*
20	---	$Pt_{0.40}$	51	62	44	55	27	49	*	*	*	*	*
	FAN	$P_{tF.40}$	54	63	73	76	115	130	71	*	*	*	*
	CC	$P_{tC.20}$	94	100	104	97	121	124	247	249	331	264	*
22,4	---	$Pt_{0.40}$	52	60	48	59	42	49	*	*	*	*	*
	FAN	$P_{tF.40}$	53	59	71	81	111	123	70	*	*	*	*
	CC	$P_{tC.20}$	92	95	101	104	117	118	239	239	323	264	*
25	---	$Pt_{0.40}$	51	62	47	57	41	63	*	*	*	*	*
	FAN	$P_{tF.40}$	51	59	68	70	106	120	89	*	*	*	*
	CC	$P_{tC.20}$	88	94	98	91	112	115	247	261	357	314	*
28	---	$Pt_{0.40}$	58	59	66	61	93	62	*	*	*	*	*
	FAN	$P_{tF.40}$	43	56	57	75	87	114	87	*	*	*	*
	CC	$P_{tC.20}$	76	89	82	97	92	109	238	249	346	310	*
31,5	---	$Pt_{0.40}$	57	67	65	72	90	110	57	45	86	*	*
	FAN	$P_{tF.40}$	42	48	55	58	83	96	111	138	200	*	247
	CC	$P_{tC.20}$	73	77	79	74	88	92	238	327	496	333	542
35,5	---	$Pt_{0.40}$	56	64	65	77	93	106	56	45	85	*	*
	FAN	$P_{tF.40}$	41	46	54	61	82	92	107	132	192	*	241
	CC	$P_{tC.20}$	72	73	77	79	87	87	229	311	476	326	523
40	---	$Pt_{0.40}$	54	64	63	70	89	109	61	55	102	120	*
	FAN	$P_{tF.40}$	39	46	52	54	78	90	102	126	178	213	275
	CC	$P_{tC.20}$	69	73	75	70	83	86	218	300	446	467	540
45	---	$Pt_{0.40}$	53	61	62	74	89	104	60	54	100	135	*
	FAN	$P_{tF.40}$	38	43	50	58	76	86	98	120	171	195	266
	CC	$P_{tC.20}$	66	69	72	75	80	82	210	286	429	432	519
50	---	$Pt_{0.40}$	51	60	60	66	86	104	95	103	109	132	148
	FAN	$P_{tF.40}$	36	42	49	50	72	84	79	101	122	190	211
	CC	$P_{tC.20}$	64	68	70	65	77	80	171	245	318	420	420
56	---	$Pt_{0.40}$	50	58	70	71	98	100	92	99	106	169	144
	FAN	$P_{tF.40}$	32	40	45	54	65	80	76	97	119	160	203
	CC	$P_{tC.20}$	56	64	65	70	69	76	165	234	308	359	404
63	---	$Pt_{0.40}$	48	56	69	73	94	110	91	100	107	166	152
	FAN	$P_{tF.40}$	31	36	44	46	62	72	73	94	113	156	194
	CC	$P_{tC.20}$	54	57	63	60	66	68	159	228	295	350	387
71	---	$Pt_{0.40}$	47	53	66	78	92	106	88	96	105	162	148
	FAN	$P_{tF.40}$	30	34	42	49	61	69	71	90	110	147	186
	CC	$P_{tC.20}$	53	55	61	64	64	65	154	218	286	329	372
80	---	$Pt_{0.40}$	45	52	65	69	88	104	80	95	104	159	150
	FAN	$P_{tF.40}$	29	33	41	43	58	67	59	77	99	143	155
	CC	$P_{tC.20}$	51	54	59	56	61	64	129	187	255	321	311
90	---	$Pt_{0.40}$	44	50	62	74	86	100	78	94	103	134	151
	FAN	$P_{tF.40}$	28	32	39	46	56	64	57	75	94	127	149
	CC	$P_{tC.20}$	50	51	56	59	59	61	124	181	243	282	300
100	---	$Pt_{0.40}$	43	50	60	64	82	97	76	91	100	129	146
	FAN	$P_{tF.40}$	27	31	38	40	53	61	55	72	92	119	144
	CC	$P_{tC.20}$	48	50	55	51	56	59	120	174	236	265	290

*** Additional Cooling Necessary - Consult Factory**

Nom. Ratio	Cooling Type		SK 5407/ SK 5507	SK 6407/ SK 6507	SK 7407/ SK 7507	SK 8407/ SK 8507	SK 9407/ SK 9507	SK 10407/ SK 10507	SK 11407/ SK 11507	SK 12407/ SK 12507	SK 13407/ SK 13507	SK 14407/ SK 14507	SK 15407/ SK 15507
			Thermal Power										
i_N			P_N [kW]	P_N [kW]	P_N [kW]	P_N [kW]	P_N [kW]	P_N [kW]	P_N [kW]	P_N [kW]	P_N [kW]	P_N [kW]	P_N [kW]
112	---	$Pt_{0.40}$	38	47	49	68	74	93	78	95	104	126	159
	FAN	$P_{tF.40}$	23	30	30	42	47	59	55	72	90	116	142
	CC	$P_{tC.20}$	40	48	44	55	49	56	120	174	233	260	287
125	---	$Pt_{0.40}$	37	42	48	52	72	83	75	91	102	129	153
	FAN	$P_{tF.40}$	22	26	30	31	45	51	53	69	87	113	137
	CC	$P_{tC.20}$	39	41	43	40	48	49	116	167	226	252	277
140	---	$Pt_{0.40}$	36	40	46	55	69	80	73	89	98	127	150
	FAN	$P_{tF.40}$	22	25	29	33	43	49	51	67	83	110	132
	CC	$P_{tC.20}$	38	39	41	43	46	47	110	161	215	247	267
160	---	$Pt_{0.40}$	35	40	45	49	66	77	71	86	96	120	145
	FAN	$P_{tF.40}$	21	24	28	29	41	47	49	64	81	103	128
	CC	$P_{tC.20}$	37	39	40	38	44	45	107	155	209	231	258
180	---	$Pt_{0.40}$	34	38	45	51	65	74	70	85	96	118	145
	FAN	$P_{tF.40}$	20	23	28	31	41	46	48	63	78	101	122
	CC	$P_{tC.20}$	36	37	40	40	43	43	104	151	203	226	247
200	---	$Pt_{0.40}$	33	37	44	47	63	73	68	82	93	117	141
	FAN	$P_{tF.40}$	20	23	27	28	39	45	46	60	76	97	118
	CC	$P_{tC.20}$	35	36	39	37	41	42	101	145	197	218	238
224	---	$Pt_{0.40}$	33	36	44	50	64	71	65	80	90	115	137
	FAN	$P_{tF.40}$	20	22	26	30	40	43	44	58	72	95	114
	CC	$P_{tC.20}$	35	35	38	39	42	41	96	139	187	213	230
250	---	$Pt_{0.40}$	32	37	42	45	62	72	63	77	87	108	132
	FAN	$P_{tF.40}$	19	22	26	27	38	44	43	55	70	89	110
	CC	$P_{tC.20}$	34	35	37	35	40	42	93	134	181	199	222
280	---	$Pt_{0.40}$	31	35	41	48	59	69	60	73	83	106	126
	FAN	$P_{tF.40}$	19	21	25	28	36	42	41	53	67	87	103
	CC	$P_{tC.20}$	33	34	35	37	38	40	88	128	172	195	208
315	---	$Pt_{0.40}$	30	34	40	42	57	66	58	71	81	97	122
	FAN	$P_{tF.40}$	18	21	24	25	35	40	39	51	65	81	99
	CC	$P_{tC.20}$	32	33	34	32	37	38	85	123	168	181	201
355	---	$Pt_{0.40}$	29	33	40	45	56	63	56	69	78	96	118
	FAN	$P_{tF.40}$	17	20	24	27	34	38	37	49	62	79	96
	CC	$P_{tC.20}$	31	32	34	34	36	36	81	118	159	178	194
400	---	$Pt_{0.40}$	28	32	39	41	53	62	54	66	76	96	114
	FAN	$P_{tF.40}$	17	19	23	24	33	37	36	47	60	79	93
	CC	$P_{tC.20}$	30	31	33	31	34	36	79	113	154	178	187
450	---	$Pt_{0.40}$	---	31	---	44	---	60	---	---	---	---	---
	FAN	$P_{tF.40}$	---	19	---	26	---	36	---	---	---	---	---
	CC	$P_{tC.20}$	---	30	---	33	---	34	---	---	---	---	---

Thermal Rating
M5 Mounting - 1500 rpm
@ 20°C = 68°F



Nom. Ratio	Cooling Type		SK 5407/ SK 5507	SK 6407/ SK 6507	SK 7407/ SK 7507	SK 8407/ SK 8507	SK 9407/ SK 9507	SK 10407/ SK 10507	SK 11407/ SK 11507	SK 12407/ SK 12507	SK 13407/ SK 13507	SK 14407/ SK 14507	SK 15407/ SK 15507
			Thermal Power										
i_N			P_N [kW]	P_N [kW]	P_N [kW]	P_N [kW]	P_N [kW]	P_N [kW]	P_N [kW]	P_N [kW]	P_N [kW]	P_N [kW]	P_N [kW]
12,5	---	$Pt_{0.20}$	---	---	---	---	---	---	*	*	*	---	*
	FAN	$P_{tF.20}$	---	---	---	---	---	---	*	*	*	---	*
	CC	$P_{tC.20}$	---	---	---	---	---	---	*	*	*	---	*
14	---	$Pt_{0.20}$	---	---	---	---	---	---	*	*	*	*	*
	FAN	$P_{tF.20}$	---	---	---	---	---	---	*	*	*	*	*
	CC	$P_{tC.20}$	---	---	---	---	---	---	11	*	*	*	*
16	---	$Pt_{0.20}$	---	---	---	---	---	---	*	*	*	*	*
	FAN	$P_{tF.20}$	---	---	---	---	---	---	*	*	*	*	*
	CC	$P_{tC.20}$	---	---	---	---	---	---	98	*	*	*	*
18	---	$Pt_{0.20}$	49	---	23	---	*	---	*	*	*	*	*
	FAN	$P_{tF.20}$	71	---	98	---	128	---	*	*	*	*	*
	CC	$P_{tC.20}$	105	---	118	---	113	---	100	*	*	*	*
20	---	$Pt_{0.20}$	47	60	24	40	*	*	*	*	*	*	*
	FAN	$P_{tF.20}$	68	79	95	97	125	168	*	*	*	*	*
	CC	$P_{tC.20}$	101	107	115	106	111	137	142	22	*	*	*
22,4	---	$Pt_{0.20}$	51	58	33	44	*	*	*	*	*	*	*
	FAN	$P_{tF.20}$	67	75	91	103	144	164	*	*	*	*	*
	CC	$P_{tC.20}$	98	101	109	113	130	134	140	28	*	*	*
25	---	$Pt_{0.20}$	49	62	34	48	*	23	*	*	*	*	*
	FAN	$P_{tF.20}$	64	74	88	90	139	159	6	*	*	*	*
	CC	$P_{tC.20}$	94	100	106	98	126	131	167	90	82	*	*
28	---	$Pt_{0.20}$	67	59	72	52	96	24	*	*	*	*	*
	FAN	$P_{tF.20}$	54	70	71	96	109	151	9	*	*	*	*
	CC	$P_{tC.20}$	79	95	86	105	98	124	162	89	85	*	*
31,5	---	$Pt_{0.20}$	64	76	71	80	93	117	23	*	3	*	*
	FAN	$P_{tF.20}$	52	60	69	71	104	120	145	174	277	*	117
	CC	$P_{tC.20}$	76	81	83	78	94	97	260	351	563	53	404
35,5	---	$Pt_{0.20}$	65	73	71	85	98	113	24	*	8	*	*
	FAN	$P_{tF.20}$	51	57	67	76	103	114	139	168	264	*	120
	CC	$P_{tC.20}$	75	77	81	83	92	92	250	337	539	57	394
40	---	$Pt_{0.20}$	62	74	70	78	95	118	37	14	54	57	*
	FAN	$P_{tF.20}$	49	57	65	67	98	113	131	165	234	282	196
	CC	$P_{tC.20}$	72	77	79	74	88	91	236	328	491	521	445
45	---	$Pt_{0.20}$	61	71	69	83	96	113	37	15	54	96	*
	FAN	$P_{tF.20}$	47	54	62	72	95	107	126	157	225	253	192
	CC	$P_{tC.20}$	70	73	75	79	85	87	227	313	472	473	430
50	---	$Pt_{0.20}$	59	70	67	75	93	115	104	106	104	95	108
	FAN	$P_{tF.20}$	45	52	60	63	90	104	97	126	152	246	273
	CC	$P_{tC.20}$	67	71	73	69	81	84	180	259	336	460	460
56	---	$Pt_{0.20}$	59	67	84	80	115	110	101	102	102	173	106
	FAN	$P_{tF.20}$	40	50	56	67	81	99	94	120	148	202	262
	CC	$P_{tC.20}$	59	67	69	73	72	80	174	247	326	384	442
63	---	$Pt_{0.20}$	57	66	82	88	111	131	101	105	106	170	127
	FAN	$P_{tF.20}$	38	44	55	57	77	89	91	117	141	197	248
	CC	$P_{tC.20}$	57	60	67	62	69	72	168	241	311	375	421
71	---	$Pt_{0.20}$	56	64	79	93	109	126	98	101	104	170	124
	FAN	$P_{tF.20}$	37	42	53	61	75	85	87	112	137	184	238
	CC	$P_{tC.20}$	55	57	64	67	67	69	162	230	302	352	404
80	---	$Pt_{0.20}$	54	63	77	83	105	124	91	105	108	167	145
	FAN	$P_{tF.20}$	36	41	51	53	72	83	74	96	123	180	196
	CC	$P_{tC.20}$	53	56	62	58	64	67	136	198	270	343	335
90	---	$Pt_{0.20}$	53	60	74	88	102	119	89	105	108	136	149
	FAN	$P_{tF.20}$	35	39	49	57	69	79	71	93	117	160	189
	CC	$P_{tC.20}$	52	54	59	62	62	64	130	191	257	303	323
100	---	$Pt_{0.20}$	51	59	72	77	98	115	87	101	105	133	145
	FAN	$P_{tF.20}$	34	39	47	49	66	76	68	89	114	150	183
	CC	$P_{tC.20}$	50	53	57	54	59	61	126	183	250	284	312

*** Additional Cooling Necessary - Consult Factory**

Nom. Ratio	Cooling Type		SK 5407/ SK 5507	SK 6407/ SK 6507	SK 7407/ SK 7507	SK 8407/ SK 8507	SK 9407/ SK 9507	SK 10407/ SK 10507	SK 11407/ SK 11507	SK 12407/ SK 12507	SK 13407/ SK 13507	SK 14407/ SK 14507	SK 15407/ SK 15507
			Thermal Power										
i_N			P_N [kW]	P_N [kW]	P_N [kW]	P_N [kW]	P_N [kW]	P_N [kW]	P_N [kW]	P_N [kW]	P_N [kW]	P_N [kW]	P_N [kW]
112	---	$Pt_{0.20}$	45	57	59	82	89	110	90	107	113	130	166
	FAN	$P_{tF.20}$	29	37	38	52	58	73	68	89	112	147	178
	CC	$P_{tC.20}$	42	50	46	57	52	59	126	184	246	279	306
125	---	$Pt_{0.20}$	44	51	58	63	86	100	87	103	110	137	161
	FAN	$P_{tF.20}$	28	32	37	39	56	64	66	86	109	142	172
	CC	$P_{tC.20}$	41	43	45	42	50	51	122	176	239	270	296
140	---	$Pt_{0.20}$	43	49	56	66	83	96	85	101	107	135	159
	FAN	$P_{tF.20}$	27	30	35	41	53	61	63	83	103	139	166
	CC	$P_{tC.20}$	40	41	43	45	48	49	116	170	227	264	285
160	---	$Pt_{0.20}$	42	48	55	59	80	93	82	97	104	128	154
	FAN	$P_{tF.20}$	26	30	34	36	51	59	61	79	101	130	160
	CC	$P_{tC.20}$	39	41	42	40	46	47	112	163	221	247	275
180	---	$Pt_{0.20}$	41	46	55	62	78	90	81	98	106	126	158
	FAN	$P_{tF.20}$	25	29	34	38	50	56	59	77	97	127	153
	CC	$P_{tC.20}$	38	39	42	42	45	45	109	159	214	242	263
200	---	$Pt_{0.20}$	39	45	53	57	76	88	79	94	103	127	153
	FAN	$P_{tF.20}$	25	28	33	35	48	55	57	74	95	122	147
	CC	$P_{tC.20}$	36	38	41	38	43	44	106	153	208	233	254
224	---	$Pt_{0.20}$	40	44	53	60	77	85	76	91	99	124	149
	FAN	$P_{tF.20}$	25	27	33	37	49	53	55	72	90	119	142
	CC	$P_{tC.20}$	37	37	40	41	44	43	101	147	198	228	244
250	---	$Pt_{0.20}$	39	44	51	55	74	87	74	88	96	118	144
	FAN	$P_{tF.20}$	24	27	32	33	47	54	53	69	88	111	137
	CC	$P_{tC.20}$	35	37	39	36	42	44	98	141	192	212	236
280	---	$Pt_{0.20}$	37	43	49	58	71	83	70	85	93	115	139
	FAN	$P_{tF.20}$	23	26	30	35	45	52	50	65	83	109	128
	CC	$P_{tC.20}$	34	35	37	39	40	42	93	134	182	208	221
315	---	$Pt_{0.20}$	36	42	48	51	68	80	68	81	90	106	134
	FAN	$P_{tF.20}$	22	26	30	31	43	49	49	63	81	101	124
	CC	$P_{tC.20}$	33	35	36	34	39	40	90	129	177	193	214
355	---	$Pt_{0.20}$	35	40	48	54	67	77	66	79	87	104	130
	FAN	$P_{tF.20}$	22	25	30	33	42	47	46	60	77	99	120
	CC	$P_{tC.20}$	32	33	36	36	38	38	85	124	168	190	206
400	---	$Pt_{0.20}$	34	39	47	50	64	75	64	76	84	104	126
	FAN	$P_{tF.20}$	21	24	29	30	40	46	45	58	74	99	116
	CC	$P_{tC.20}$	31	33	35	33	36	37	83	119	163	190	199
450	---	$Pt_{0.20}$	---	38	---	53	---	72	---	---	---	---	---
	FAN	$P_{tF.20}$	---	23	---	32	---	44	---	---	---	---	---
	CC	$P_{tC.20}$	---	31	---	35	---	36	---	---	---	---	---

Thermal Rating
M5 Mounting - 1500 rpm
@ 40°C = 104°F



Nom. Ratio	Cooling Type		SK 5407/ SK 5507	SK 6407/ SK 6507	SK 7407/ SK 7507	SK 8407/ SK 8507	SK 9407/ SK 9507	SK 10407/ SK 10507	SK 11407/ SK 11507	SK 12407/ SK 12507	SK 13407/ SK 13507	SK 14407/ SK 14507	SK 15407/ SK 15507
			Thermal Power										
i_N			P_N [kW]	P_N [kW]	P_N [kW]	P_N [kW]	P_N [kW]	P_N [kW]	P_N [kW]	P_N [kW]	P_N [kW]	P_N [kW]	P_N [kW]
12,5	---	$Pt_{0.40}$	---	---	---	---	---	---	*	*	*	---	*
	FAN	$P_{tF.40}$	---	---	---	---	---	---	*	*	*	---	*
	CC	$P_{tC.20}$	---	---	---	---	---	---	*	*	*	---	*
14	---	$Pt_{0.40}$	---	---	---	---	---	---	*	*	*	*	*
	FAN	$P_{tF.40}$	---	---	---	---	---	---	*	*	*	*	*
	CC	$P_{tC.20}$	---	---	---	---	---	---	*	*	*	*	*
16	---	$Pt_{0.40}$	---	---	---	---	---	---	*	*	*	*	*
	FAN	$P_{tF.40}$	---	---	---	---	---	---	*	*	*	*	*
	CC	$P_{tC.20}$	---	---	---	---	---	---	49	*	*	*	*
18	---	$Pt_{0.40}$	30	---	*	---	*	---	*	*	*	*	*
	FAN	$P_{tF.40}$	63	---	86	---	72	---	*	*	*	*	*
	CC	$P_{tC.20}$	109	---	122	---	80	---	54	*	*	*	*
20	---	$Pt_{0.40}$	30	41	*	13	*	*	*	*	*	*	*
	FAN	$P_{tF.40}$	61	70	85	88	72	107	*	*	*	*	*
	CC	$P_{tC.20}$	104	110	120	112	79	101	101	*	*	*	*
22,4	---	$Pt_{0.40}$	34	39	8	15	*	*	*	*	*	*	*
	FAN	$P_{tF.40}$	59	66	83	94	92	106	0	*	*	*	*
	CC	$P_{tC.20}$	101	104	116	119	99	99	101	*	*	*	*
25	---	$Pt_{0.40}$	33	43	9	24	*	*	*	*	*	*	*
	FAN	$P_{tF.40}$	56	65	80	80	90	126	*	*	*	*	*
	CC	$P_{tC.20}$	97	103	112	103	97	120	131	36	*	*	*
28	---	$Pt_{0.40}$	54	42	55	26	69	*	*	*	*	*	*
	FAN	$P_{tF.40}$	47	62	61	86	96	122	*	*	*	*	*
	CC	$P_{tC.20}$	81	97	88	110	101	116	128	38	2	*	*
31,5	---	$Pt_{0.40}$	52	62	54	62	68	88	*	*	*	*	*
	FAN	$P_{tF.40}$	45	52	60	62	91	105	116	110	188	*	*
	CC	$P_{tC.20}$	78	83	85	80	96	100	256	318	520	*	330
35,5	---	$Pt_{0.40}$	52	59	55	66	73	85	*	*	*	*	*
	FAN	$P_{tF.40}$	44	49	58	66	90	100	114	107	184	*	*
	CC	$P_{tC.20}$	77	79	83	85	95	95	247	305	504	*	323
40	---	$Pt_{0.40}$	51	60	54	62	71	91	*	*	*	*	*
	FAN	$P_{tF.40}$	42	49	56	58	85	98	120	121	206	242	53
	CC	$P_{tC.20}$	74	78	80	75	90	94	248	312	504	528	379
45	---	$Pt_{0.40}$	50	58	54	66	73	87	1	*	*	24	*
	FAN	$P_{tF.40}$	41	47	54	62	83	94	116	117	201	236	57
	CC	$P_{tC.20}$	71	74	77	80	87	89	238	299	487	498	368
50	---	$Pt_{0.40}$	48	57	53	60	71	89	81	76	67	26	32
	FAN	$P_{tF.40}$	39	45	52	54	79	91	84	109	133	229	253
	CC	$P_{tC.20}$	68	72	75	70	83	86	183	264	342	485	486
56	---	$Pt_{0.40}$	49	55	70	64	96	86	79	73	67	123	34
	FAN	$P_{tF.40}$	34	43	49	58	70	86	82	105	129	179	243
	CC	$P_{tC.20}$	60	69	70	75	74	82	177	252	332	396	466
63	---	$Pt_{0.40}$	48	56	68	74	92	110	80	77	73	121	62
	FAN	$P_{tF.40}$	33	38	47	49	67	77	79	102	123	175	225
	CC	$P_{tC.20}$	58	61	68	64	71	73	171	245	317	386	439
71	---	$Pt_{0.40}$	47	53	66	79	91	105	77	74	72	125	62
	FAN	$P_{tF.40}$	32	36	45	53	65	74	76	97	120	163	216
	CC	$P_{tC.20}$	56	58	65	68	69	70	165	235	308	362	422
80	---	$Pt_{0.40}$	45	53	65	70	88	104	73	82	79	123	97
	FAN	$P_{tF.40}$	31	36	44	46	62	72	64	84	108	159	175
	CC	$P_{tC.20}$	54	57	63	59	66	68	138	202	276	353	347
90	---	$Pt_{0.40}$	44	50	62	74	85	100	72	83	80	96	103
	FAN	$P_{tF.40}$	30	34	42	49	60	68	61	81	103	142	168
	CC	$P_{tC.20}$	53	55	60	63	63	65	133	195	263	313	333
100	---	$Pt_{0.40}$	43	50	60	65	82	97	70	80	78	96	100
	FAN	$P_{tF.40}$	29	34	41	42	57	66	59	78	100	133	162
	CC	$P_{tC.20}$	51	54	59	55	60	63	129	187	256	293	322

*** Additional Cooling Necessary - Consult Factory**

Nom. Ratio	Cooling Type		SK 5407/ SK 5507	SK 6407/ SK 6507	SK 7407/ SK 7507	SK 8407/ SK 8507	SK 9407/ SK 9507	SK 10407/ SK 10507	SK 11407/ SK 11507	SK 12407/ SK 12507	SK 13407/ SK 13507	SK 14407/ SK 14507	SK 15407/ SK 15507
			Thermal Power										
i_N			P_N [kW]	P_N [kW]	P_N [kW]	P_N [kW]	P_N [kW]	P_N [kW]	P_N [kW]	P_N [kW]	P_N [kW]	P_N [kW]	P_N [kW]
112	---	$Pt_{0.40}$	39	48	51	69	75	93	73	86	86	94	123
	FAN	$P_{tF.40}$	25	32	32	45	50	63	59	78	98	131	157
	CC	$P_{tC.20}$	43	51	47	59	53	60	128	187	251	287	315
125	---	$Pt_{0.40}$	37	43	49	53	72	85	71	83	84	103	120
	FAN	$P_{tF.40}$	24	27	32	33	48	55	57	75	95	125	152
	CC	$P_{tC.20}$	42	44	45	43	51	53	124	180	244	277	304
140	---	$Pt_{0.40}$	37	42	48	56	70	82	69	81	82	101	119
	FAN	$P_{tF.40}$	23	26	30	35	46	53	55	72	90	123	146
	CC	$P_{tC.20}$	41	42	44	45	49	50	118	173	232	272	293
160	---	$Pt_{0.40}$	35	41	47	50	67	79	67	78	80	97	115
	FAN	$P_{tF.40}$	22	26	30	31	44	51	53	69	88	115	141
	CC	$P_{tC.20}$	39	41	43	40	47	48	115	166	225	254	283
180	---	$Pt_{0.40}$	35	39	46	53	67	76	67	79	82	95	121
	FAN	$P_{tF.40}$	22	25	30	33	43	49	51	67	85	112	134
	CC	$P_{tC.20}$	38	40	43	43	46	47	111	162	219	249	270
200	---	$Pt_{0.40}$	33	39	45	49	64	75	65	76	80	97	117
	FAN	$P_{tF.40}$	21	24	29	30	42	48	50	65	83	108	130
	CC	$P_{tC.20}$	37	39	41	39	44	46	108	156	213	239	260
224	---	$Pt_{0.40}$	34	37	45	52	66	72	63	74	78	95	114
	FAN	$P_{tF.40}$	21	23	28	32	42	46	48	62	79	105	125
	CC	$P_{tC.20}$	37	37	40	41	45	44	103	150	202	234	251
250	---	$Pt_{0.40}$	33	38	44	47	63	74	61	72	76	90	111
	FAN	$P_{tF.40}$	21	24	27	29	41	47	46	60	76	99	121
	CC	$P_{tC.20}$	36	38	39	37	43	45	100	144	196	218	242
280	---	$Pt_{0.40}$	32	36	42	50	60	71	58	69	73	89	108
	FAN	$P_{tF.40}$	20	23	26	30	39	45	44	57	72	97	113
	CC	$P_{tC.20}$	35	36	38	39	41	43	94	137	186	214	227
315	---	$Pt_{0.40}$	31	36	41	44	58	68	56	66	71	82	104
	FAN	$P_{tF.40}$	19	22	26	27	37	43	42	55	70	89	109
	CC	$P_{tC.20}$	34	35	37	35	39	41	91	132	181	199	219
355	---	$Pt_{0.40}$	30	34	41	46	57	65	54	65	68	80	102
	FAN	$P_{tF.40}$	19	21	26	28	36	41	40	53	67	87	105
	CC	$P_{tC.20}$	33	34	37	37	38	39	87	127	172	195	212
400	---	$Pt_{0.40}$	29	33	40	43	55	64	53	62	67	80	98
	FAN	$P_{tF.40}$	18	21	25	26	35	40	39	51	65	87	101
	CC	$P_{tC.20}$	32	33	36	34	37	38	84	122	167	195	204
450	---	$Pt_{0.40}$	---	32	---	45	---	62	---	---	---	---	---
	FAN	$P_{tF.40}$	---	20	---	28	---	38	---	---	---	---	---
	CC	$P_{tC.20}$	---	32	---	36	---	37	---	---	---	---	---

Thermal Rating
M5 Mounting - 1800 rpm
@ 20°C = 68°F



Nom. Ratio	Cooling Type		SK 5407/ SK 5507	SK 6407/ SK 6507	SK 7407/ SK 7507	SK 8407/ SK 8507	SK 9407/ SK 9507	SK 10407/ SK 10507	SK 11407/ SK 11507	SK 12407/ SK 12507	SK 13407/ SK 13507	SK 14407/ SK 14507	SK 15407/ SK 15507
			Thermal Power										
i_N			P_N [kW]	P_N [kW]	P_N [kW]	P_N [kW]	P_N [kW]	P_N [kW]	P_N [kW]	P_N [kW]	P_N [kW]	P_N [kW]	P_N [kW]
12,5	---	$Pt_{0.20}$	---	---	---	---	---	---	*	*	*	---	*
	FAN	$P_{tF.20}$	---	---	---	---	---	---	*	*	*	---	*
	CC	$P_{tC.20}$	---	---	---	---	---	---	*	*	*	---	*
14	---	$Pt_{0.20}$	---	---	---	---	---	---	*	*	*	*	*
	FAN	$P_{tF.20}$	---	---	---	---	---	---	*	*	*	*	*
	CC	$P_{tC.20}$	---	---	---	---	---	---	*	*	*	*	*
16	---	$Pt_{0.20}$	---	---	---	---	---	---	*	*	*	*	*
	FAN	$P_{tF.20}$	---	---	---	---	---	---	*	*	*	*	*
	CC	$P_{tC.20}$	---	---	---	---	---	---	*	*	*	*	*
18	---	$Pt_{0.20}$	17	---	*	---	*	---	*	*	*	*	*
	FAN	$P_{tF.20}$	81	---	76	---	19	---	*	*	*	*	*
	CC	$P_{tC.20}$	117	---	99	---	*	---	*	*	*	*	*
20	---	$Pt_{0.20}$	18	30	*	*	*	*	*	*	*	*	*
	FAN	$P_{tF.20}$	78	88	76	98	23	68	*	*	*	*	*
	CC	$P_{tC.20}$	112	118	98	108	2	27	*	*	*	*	*
22,4	---	$Pt_{0.20}$	24	30	*	*	*	*	*	*	*	*	*
	FAN	$P_{tF.20}$	75	83	86	105	59	70	*	*	*	*	*
	CC	$P_{tC.20}$	109	112	107	116	41	32	*	*	*	*	*
25	---	$Pt_{0.20}$	24	36	*	*	*	*	*	*	*	*	*
	FAN	$P_{tF.20}$	72	82	85	105	60	102	*	*	*	*	*
	CC	$P_{tC.20}$	104	109	105	114	42	68	*	*	*	*	*
28	---	$Pt_{0.20}$	60	36	56	*	64	*	*	*	*	*	*
	FAN	$P_{tF.20}$	57	77	76	112	119	101	*	*	*	*	*
	CC	$P_{tC.20}$	84	104	92	122	107	68	*	*	*	*	*
31,5	---	$Pt_{0.20}$	58	69	56	66	63	86	*	*	*	*	*
	FAN	$P_{tF.20}$	55	63	74	76	114	129	99	76	142	*	*
	CC	$P_{tC.20}$	81	86	89	84	102	105	226	273	467	*	64
35,5	---	$Pt_{0.20}$	59	67	58	71	72	84	*	*	*	*	*
	FAN	$P_{tF.20}$	54	60	71	81	111	124	97	76	143	*	*
	CC	$P_{tC.20}$	80	82	86	89	100	100	219	263	454	*	76
40	---	$Pt_{0.20}$	57	68	57	67	70	93	*	*	*	*	*
	FAN	$P_{tF.20}$	52	60	69	72	106	121	111	100	185	213	*
	CC	$P_{tC.20}$	77	81	84	79	95	98	226	279	472	482	201
45	---	$Pt_{0.20}$	56	65	58	71	75	90	*	*	*	*	*
	FAN	$P_{tF.20}$	50	57	66	76	102	116	108	98	182	251	*
	CC	$P_{tC.20}$	74	77	80	84	92	94	219	268	457	495	199
50	---	$Pt_{0.20}$	54	65	56	66	72	95	85	70	49	*	*
	FAN	$P_{tF.20}$	48	56	64	67	98	112	104	135	166	247	278
	CC	$P_{tC.20}$	71	75	78	73	87	90	191	276	360	485	486
56	---	$Pt_{0.20}$	58	62	82	70	111	91	83	68	50	110	*
	FAN	$P_{tF.20}$	42	53	60	71	85	107	100	130	161	225	271
	CC	$P_{tC.20}$	62	72	73	78	77	86	184	265	350	422	471
63	---	$Pt_{0.20}$	56	66	80	87	107	128	86	75	61	109	*
	FAN	$P_{tF.20}$	41	47	58	60	82	94	96	125	153	219	293
	CC	$P_{tC.20}$	60	63	71	66	73	76	178	257	333	412	483
71	---	$Pt_{0.20}$	55	63	78	93	106	123	83	72	60	119	*
	FAN	$P_{tF.20}$	39	45	56	64	80	90	93	120	148	203	284
	CC	$P_{tC.20}$	58	60	68	71	71	73	172	246	324	384	466
80	---	$Pt_{0.20}$	53	62	76	83	102	122	81	88	74	118	70
	FAN	$P_{tF.20}$	38	44	54	56	76	88	78	103	133	199	223
	CC	$P_{tC.20}$	56	59	66	62	68	71	144	211	290	375	374
90	---	$Pt_{0.20}$	52	60	73	88	100	117	80	89	77	85	83
	FAN	$P_{tF.20}$	37	42	51	60	73	84	75	100	127	179	212
	CC	$P_{tC.20}$	55	56	62	66	65	68	138	204	276	335	358
100	---	$Pt_{0.20}$	50	59	71	77	96	114	78	86	75	87	81
	FAN	$P_{tF.20}$	36	41	50	52	70	81	73	96	124	167	205
	CC	$P_{tC.20}$	53	56	61	57	63	65	134	196	269	314	346

*** Additional Cooling Necessary - Consult Factory**

Nom. Ratio	Cooling Type		SK 5407/ SK 5507	SK 6407/ SK 6507	SK 7407/ SK 7507	SK 8407/ SK 8507	SK 9407/ SK 9507	SK 10407/ SK 10507	SK 11407/ SK 11507	SK 12407/ SK 12507	SK 13407/ SK 13507	SK 14407/ SK 14507	SK 15407/ SK 15507
			Thermal Power										
i_N			P_N [kW]	P_N [kW]	P_N [kW]	P_N [kW]	P_N [kW]	P_N [kW]	P_N [kW]	P_N [kW]	P_N [kW]	P_N [kW]	P_N [kW]
112	---	$Pt_{0.20}$	46	56	60	82	89	110	83	95	89	86	118
	FAN	$P_{tF.20}$	30	39	40	55	61	77	72	95	120	164	196
	CC	$P_{tC.20}$	45	53	48	61	55	62	133	195	263	307	334
125	---	$Pt_{0.20}$	45	52	59	64	86	101	81	92	87	101	115
	FAN	$P_{tF.20}$	29	33	39	41	59	67	70	92	117	156	190
	CC	$P_{tC.20}$	43	45	47	45	53	54	129	188	256	295	323
140	---	$Pt_{0.20}$	44	50	57	67	83	97	79	90	85	99	116
	FAN	$P_{tF.20}$	28	32	37	43	57	65	67	88	111	153	182
	CC	$P_{tC.20}$	42	43	45	47	51	52	123	181	243	289	311
160	---	$Pt_{0.20}$	42	49	56	60	80	94	77	87	83	96	112
	FAN	$P_{tF.20}$	28	31	36	38	54	62	65	85	108	143	176
	CC	$P_{tC.20}$	41	43	44	42	49	50	119	174	236	270	300
180	---	$Pt_{0.20}$	41	47	55	63	79	90	77	89	87	94	124
	FAN	$P_{tF.20}$	27	30	36	40	53	60	63	82	105	140	167
	CC	$P_{tC.20}$	40	41	44	44	48	48	116	169	229	264	285
200	---	$Pt_{0.20}$	40	46	54	58	76	89	75	86	85	100	120
	FAN	$P_{tF.20}$	26	30	35	37	51	58	61	79	102	134	161
	CC	$P_{tC.20}$	38	40	43	41	46	47	112	163	223	253	275
224	---	$Pt_{0.20}$	41	44	54	62	78	86	72	84	83	98	118
	FAN	$P_{tF.20}$	26	28	34	39	52	56	58	76	97	131	155
	CC	$P_{tC.20}$	39	39	42	43	47	45	107	156	211	248	265
250	---	$Pt_{0.20}$	39	45	52	56	75	88	70	80	81	93	114
	FAN	$P_{tF.20}$	25	29	34	35	50	57	56	73	94	123	150
	CC	$P_{tC.20}$	37	39	41	38	45	46	104	150	205	231	256
280	---	$Pt_{0.20}$	38	44	50	60	72	85	67	78	79	91	114
	FAN	$P_{tF.20}$	24	28	32	37	48	55	53	70	89	120	139
	CC	$P_{tC.20}$	36	37	39	41	43	44	98	143	194	227	239
315	---	$Pt_{0.20}$	37	43	49	53	69	81	65	75	77	84	110
	FAN	$P_{tF.20}$	24	27	31	33	46	52	52	67	86	111	135
	CC	$P_{tC.20}$	35	37	38	36	41	42	95	137	189	210	231
355	---	$Pt_{0.20}$	36	41	49	56	68	78	63	73	74	83	107
	FAN	$P_{tF.20}$	23	26	31	35	44	50	49	64	82	109	130
	CC	$P_{tC.20}$	34	35	38	38	40	40	91	132	180	206	223
400	---	$Pt_{0.20}$	35	40	48	51	65	76	61	70	72	83	104
	FAN	$P_{tF.20}$	22	25	30	32	43	49	48	62	80	109	126
	CC	$P_{tC.20}$	33	34	37	35	38	39	88	127	175	206	215
450	---	$Pt_{0.20}$	---	39	---	54	---	73	---	---	---	---	---
	FAN	$P_{tF.20}$	---	24	---	34	---	47	---	---	---	---	---
	CC	$P_{tC.20}$	---	33	---	37	---	38	---	---	---	---	---

Thermal Rating
M5 Mounting - 1800 rpm
@ 40ºC = 104ºF



Nom. Ratio	Cooling Type		SK 5407/ SK 5507	SK 6407/ SK 6507	SK 7407/ SK 7507	SK 8407/ SK 8507	SK 9407/ SK 9507	SK 10407/ SK 10507	SK 11407/ SK 11507	SK 12407/ SK 12507	SK 13407/ SK 13507	SK 14407/ SK 14507	SK 15407/ SK 15507
			Thermal Power										
i_N			P_N [kW]	P_N [kW]	P_N [kW]	P_N [kW]	P_N [kW]	P_N [kW]	P_N [kW]	P_N [kW]	P_N [kW]	P_N [kW]	P_N [kW]
12,5	---	$Pt_{0.40}$	---	---	---	---	---	---	*	*	*	---	*
	FAN	$P_{tF.40}$	---	---	---	---	---	---	*	*	*	---	*
	CC	$P_{tC.20}$	---	---	---	---	---	---	*	*	*	---	*
14	---	$Pt_{0.40}$	---	---	---	---	---	---	*	*	*	*	*
	FAN	$P_{tF.40}$	---	---	---	---	---	---	*	*	*	*	*
	CC	$P_{tC.20}$	---	---	---	---	---	---	*	*	*	*	*
16	---	$Pt_{0.40}$	---	---	---	---	---	---	*	*	*	*	*
	FAN	$P_{tF.40}$	---	---	---	---	---	---	*	*	*	*	*
	CC	$P_{tC.20}$	---	---	---	---	---	---	*	*	*	*	*
18	---	$Pt_{0.40}$	*	---	*	---	*	---	*	*	*	*	*
	FAN	$P_{tF.40}$	69	---	35	---	*	---	*	*	*	*	*
	CC	$P_{tC.20}$	119	---	76	---	*	---	*	*	*	*	*
20	---	$Pt_{0.40}$	*	5	*	*	*	*	*	*	*	*	*
	FAN	$P_{tF.40}$	67	81	36	58	*	*	*	*	*	*	*
	CC	$P_{tC.20}$	115	125	76	85	*	*	*	*	*	*	*
22,4	---	$Pt_{0.40}$	3	6	*	*	*	*	*	*	*	*	*
	FAN	$P_{tF.40}$	69	77	49	62	*	*	*	*	*	*	*
	CC	$P_{tC.20}$	115	118	86	91	*	*	*	*	*	*	*
25	---	$Pt_{0.40}$	4	14	*	*	*	*	*	*	*	*	*
	FAN	$P_{tF.40}$	66	74	49	68	*	34	*	*	*	*	*
	CC	$P_{tC.20}$	110	115	85	93	3	26	*	*	*	*	*
28	---	$Pt_{0.40}$	45	14	38	*	34	*	*	*	*	*	*
	FAN	$P_{tF.40}$	50	70	66	73	106	36	*	*	*	*	*
	CC	$P_{tC.20}$	86	109	94	100	112	28	*	*	*	*	*
31,5	---	$Pt_{0.40}$	44	54	37	47	34	54	*	*	*	*	*
	FAN	$P_{tF.40}$	48	55	64	67	101	114	38	*	21	*	*
	CC	$P_{tC.20}$	83	88	92	86	107	109	195	237	417	*	*
35,5	---	$Pt_{0.40}$	45	52	40	50	44	53	*	*	*	*	*
	FAN	$P_{tF.40}$	47	52	62	71	98	109	39	*	28	*	*
	CC	$P_{tC.20}$	82	84	89	91	103	104	190	229	406	*	*
40	---	$Pt_{0.40}$	44	54	40	49	44	63	*	*	*	*	*
	FAN	$P_{tF.40}$	45	52	60	63	94	107	57	32	89	96	*
	CC	$P_{tC.20}$	79	83	86	81	99	102	198	246	427	427	118
45	---	$Pt_{0.40}$	44	51	41	52	50	62	*	*	*	*	*
	FAN	$P_{tF.40}$	44	50	58	67	90	102	56	33	89	149	*
	CC	$P_{tC.20}$	76	79	82	86	95	97	192	237	414	445	120
50	---	$Pt_{0.40}$	42	52	41	49	48	67	60	36	5	*	*
	FAN	$P_{tF.40}$	42	48	56	58	86	98	90	120	150	148	168
	CC	$P_{tC.20}$	73	77	80	75	91	93	195	284	373	436	431
56	---	$Pt_{0.40}$	48	49	68	52	91	65	59	36	7	50	*
	FAN	$P_{tF.40}$	36	46	52	62	74	93	87	115	146	205	166
	CC	$P_{tC.20}$	63	73	74	80	78	89	188	272	362	441	418
63	---	$Pt_{0.40}$	46	54	66	73	88	105	62	44	22	51	*
	FAN	$P_{tF.40}$	35	40	50	52	71	82	84	110	136	200	194
	CC	$P_{tC.20}$	61	64	72	68	75	78	181	263	343	430	432
71	---	$Pt_{0.40}$	45	52	65	77	87	101	61	43	23	67	*
	FAN	$P_{tF.40}$	34	39	48	56	69	78	81	106	133	183	189
	CC	$P_{tC.20}$	59	62	69	72	73	74	175	252	333	399	418
80	---	$Pt_{0.40}$	44	52	63	69	84	101	62	63	41	67	3
	FAN	$P_{tF.40}$	33	38	47	49	66	76	68	90	118	179	212
	CC	$P_{tC.20}$	57	60	67	63	70	72	147	216	298	389	400
90	---	$Pt_{0.40}$	43	49	61	73	82	97	62	65	45	36	23
	FAN	$P_{tF.40}$	32	36	44	52	63	73	66	87	113	164	198
	CC	$P_{tC.20}$	56	58	64	67	67	69	141	208	284	351	379
100	---	$Pt_{0.40}$	42	49	59	64	79	95	61	63	45	43	23
	FAN	$P_{tF.40}$	31	35	43	45	61	70	64	84	110	153	191
	CC	$P_{tC.20}$	54	57	62	58	64	66	137	200	277	328	366

*** Additional Cooling Necessary - Consult Factory**

Nom. Ratio	Cooling Type		SK 5407/ SK 5507	SK 6407/ SK 6507	SK 7407/ SK 7507	SK 8407/ SK 8507	SK 9407/ SK 9507	SK 10407/ SK 10507	SK 11407/ SK 11507	SK 12407/ SK 12507	SK 13407/ SK 13507	SK 14407/ SK 14507	SK 15407/ SK 15507
			Thermal Power										
i_N			P_N [kW]	P_N [kW]	P_N [kW]	P_N [kW]	P_N [kW]	P_N [kW]	P_N [kW]	P_N [kW]	P_N [kW]	P_N [kW]	P_N [kW]
112	---	$Pt_{0.40}$	39	47	51	69	74	91	66	72	59	42	68
	FAN	$P_{tF.40}$	26	34	34	48	53	67	63	83	106	150	177
	CC	$P_{tC.20}$	45	54	49	62	56	64	136	200	269	321	347
125	---	$Pt_{0.40}$	38	44	50	54	72	85	64	70	58	61	66
	FAN	$P_{tF.40}$	25	29	33	35	51	58	61	80	103	141	171
	CC	$P_{tC.20}$	44	46	48	46	54	56	132	192	262	306	335
140	---	$Pt_{0.40}$	37	42	48	57	69	82	63	69	58	60	70
	FAN	$P_{tF.40}$	24	28	32	37	49	56	58	77	98	138	164
	CC	$P_{tC.20}$	43	44	46	48	52	53	126	185	249	299	322
160	---	$Pt_{0.40}$	36	41	47	51	67	79	61	67	57	59	68
	FAN	$P_{tF.40}$	24	27	31	33	47	54	57	74	96	129	158
	CC	$P_{tC.20}$	41	43	45	43	50	51	122	177	242	280	311
180	---	$Pt_{0.40}$	35	40	47	54	66	76	62	69	62	58	83
	FAN	$P_{tF.40}$	23	26	31	35	46	52	55	72	92	126	148
	CC	$P_{tC.20}$	40	42	45	45	49	49	118	173	234	274	294
200	---	$Pt_{0.40}$	34	39	46	50	64	75	60	67	61	66	80
	FAN	$P_{tF.40}$	22	26	30	32	44	51	53	69	89	120	143
	CC	$P_{tC.20}$	39	41	44	41	47	48	114	166	228	262	284
224	---	$Pt_{0.40}$	34	38	46	52	66	72	58	65	59	65	80
	FAN	$P_{tF.40}$	22	24	30	34	45	49	51	67	85	117	138
	CC	$P_{tC.20}$	39	39	43	44	48	46	109	160	216	256	274
250	---	$Pt_{0.40}$	33	39	44	48	63	74	56	63	58	62	77
	FAN	$P_{tF.40}$	22	25	29	30	43	49	49	64	83	110	133
	CC	$P_{tC.20}$	38	40	42	39	46	47	106	154	210	240	264
280	---	$Pt_{0.40}$	32	37	43	51	61	71	54	61	57	61	79
	FAN	$P_{tF.40}$	21	24	28	32	41	47	46	61	78	108	123
	CC	$P_{tC.20}$	37	38	40	42	44	45	100	146	199	235	246
315	---	$Pt_{0.40}$	31	36	42	45	58	69	53	59	56	57	77
	FAN	$P_{tF.40}$	20	23	27	28	39	45	45	58	76	99	119
	CC	$P_{tC.20}$	36	37	39	37	42	43	97	140	193	217	238
355	---	$Pt_{0.40}$	30	35	42	47	57	66	51	58	54	56	75
	FAN	$P_{tF.40}$	20	22	27	30	39	43	43	56	72	97	115
	CC	$P_{tC.20}$	34	36	39	39	41	41	93	135	184	212	230
400	---	$Pt_{0.40}$	29	34	40	43	55	65	49	56	53	56	73
	FAN	$P_{tF.40}$	19	22	26	27	37	42	42	54	70	97	111
	CC	$P_{tC.20}$	33	35	38	35	39	40	90	130	179	212	222
450	---	$Pt_{0.40}$	---	33	---	46	---	62	---	---	---	---	---
	FAN	$P_{tF.40}$	---	21	---	29	---	41	---	---	---	---	---
	CC	$P_{tC.20}$	---	33	---	38	---	39	---	---	---	---	---

Notes

DRIVESYSTEMS

Right-Angle Dimensions

Dimensional Overview 220
Shaft Size Dimension Overview 221
SK 5407 / 5507 222
SK 6407 / 6507 224
SK 7407 / 7507 226
SK 8407 / 8507 228
SK 9407 / 9507 230
SK 10407 / 10507 232
SK 11407 / 11507 234
SK 12407 / 12507 236
SK 13407 / 13507 238
SK 14407 / 14507 240
SK 15407 / 15507 242
Optional Shaft 244
Accessory Option 247

Overview Dimension





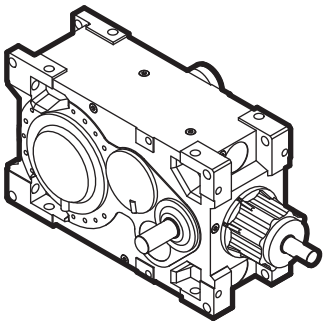

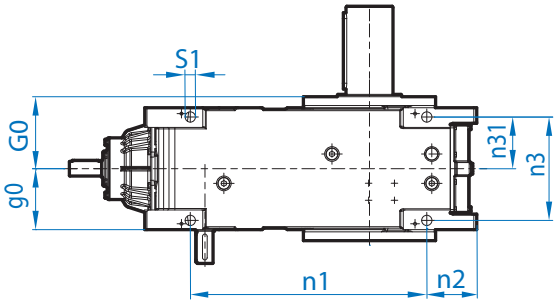

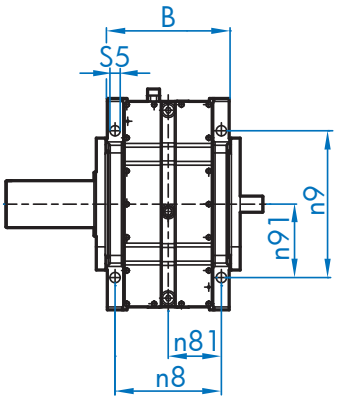

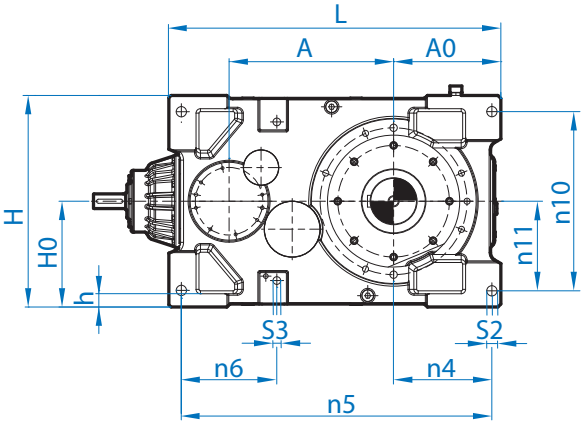

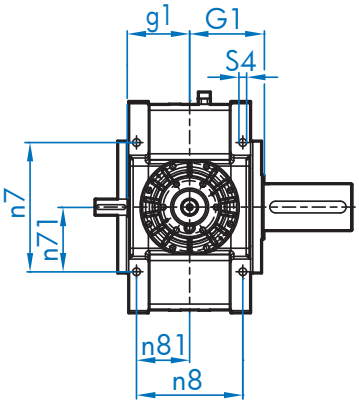

	OVERALL DIMENSIONS											MOUNTING HOLE DIM.			
	A	A0	B	g0	G0	g1	G1	h	H	H0	L	S1/S2	S4/S5	S3	⇨🕮
SK 5.07	377	230	345	172,5	172,5	182,5	192,5	30	455	227,5	730	ø 28	M24 x 40	M24 x 36	220
SK 6.07	407	255	345	172,5	172,5	182,5	192,5	30	495	247,5	780	ø 28	M24 x 40	M24 x 36	222
SK 7.07	440	295	350	175	189	179	197 (215)*	35	530	265	870	ø 28	M24 x 30	M24	226
SK 8.07	465	325	350	175	189	179	197 (215)*	35	590	295	925	ø 28	M24 x 30	M24	228
SK 9.07	530	330	415	207,5	248	212,5	253	45	650	325	1055	ø 35	M30 x 45	M30	230
SK 10.07	560	365	415	207,5	248	212,5	253	45	720	360	1130	ø 35	M30 x 45	M30	232
SK 11.07	630	370	440	254	270	260	280	52	750	375	1210	ø 42	M36 x 58	M36	234
SK 12.07	695	405	510	288,5	305	294	315	57	850	425	1345	ø 48	M42 x 65	M42	236
SK 13.07	780	475	550	323	343	328	353	60	950	475	1530	ø 55	M48 x 75	M48	238
SK 14.07	835	505	610	325	373	355	383	55	1050	525	1615	ø 55	M48 x 75	M48	240
SK 15.07	935	545	650	361	385	371	395	70	1100	550	1800	ø 65	M56 x 90	M56	242

	CENTER DISTANCE DIMENSIONS															
	n1	n2	n3	n31	n4	n41	n5	n6	n7	n71	n8	n9	n91	n10	n11	⇨🕮
SK 5.07	490	125	295	147,5	205	680	196	320	160	295	147,5	320	160	400	200	220
SK 6.07	530	130	295	147,5	230	730	196	320	160	295	147,5	320	160	400	200	222
SK 7.07	590	160	305	152,5	270	820	220	380	190	300	150	380	190	460	230	226
SK 8.07	645	160	305	152,5	300	875	220	440	220	300	150	380	190	540	270	228
SK 9.07	730	175	352	176	302,5	995	325	440	220	362	181	440	220	540	270	230
SK 10.07	805	170	352	176	335	1057	325	500	250	362	181	440	220	640	320	232
SK 11.07	850	217,5	370	185	330	1130	340	520	260	385	192,5	520	260	670	335	234
SK 12.07	930	257,5	430	215	365	1265	410	600	300	440	220	600	300	770	385	236
SK 13.07	1050	290	465	232,5	425	1430	450	700	350	475	237,5	700	350	850	425	238
SK 14.07	1100	295	525	262,5	455	1515	150	780	390	535	267,5	700	350	950	475	240
SK 15.07	1230	345	550	275	490	1690	530	800	400	560	280	800	400	990	495	242

* values in brakets at option „DRY“

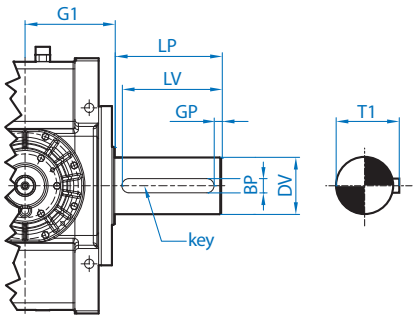

Solid Output Shaft

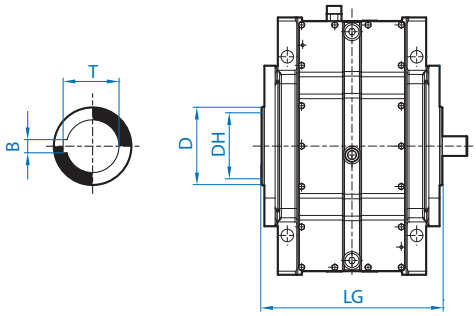

Hollow Shaft

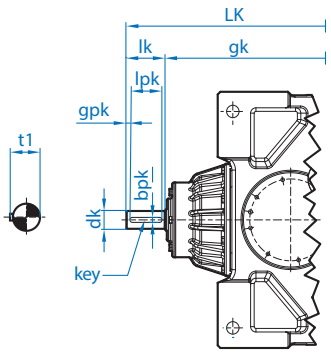

Solid Input Shaft

	SOLID OUTPUT SHAFT							HOLLOW SHAFT					
	DV	LV	LP	BP	GP	T1	Passfeder	ø D	ø DH H7	LG	B	T	⇨🕮
SK 5.07	120	210	180	32	15	127	32 x 18 x180	140	105	385	28	111,4	220
SK 6.07	120	210	180	32	15	127	32 x 18 x 180	140	105	385	28	111,4	222
SK 7.07	140	250	200	36	25	148	36 x 20 x 200	160	125	394	32	132,4	226
SK 8.07	140	250	200	36	25	148	36 x 20 x 200	160	125	394	32	132,4	228
SK 9.07	160	300	260	40	20	169	40 x 20 x 260	220	160 (145)*	506	40	169,4	230
SK 10.07	160	300	260	40	20	169	40 x 20 x 260	220	160 (145)*	506	40	169,4	232
SK 11.07	170	300	260	40	20	179	40 x 22 x 260	240	170	560	40	179,4	234
SK 12.07	200	350	300	45	25	210	45 x 25 x 300	250	190	630	45	200,4	236
SK 13.07	230	410	350	50	31	241	50 x 28 x 350	285	230	706	50	241,4	238
SK 14.07	250	410	360	56	25	262	56 x 32 x 360	285	230	766	50	241,4	240
SK 15.07	250	410	360	56	25	262	56 x 32 x 360	320	250	790	56	262,4	242

	SK..407 SOLID INPUT SHAFT										SK..507 SOLID INPUT SHAFT										
	i_N	LK	gk	dk	lk	lpk	bpk	t1	gpk	Passfeder	i_N	LK	gk	dk	lk	lpk	bpk	t1	gpk	Passfeder	⇨🕮
SK 5.07	**18 - 100**	976	896	ø 38	80	70	10	41,0	5,0	10 x 8 x 70	**112 - 400**	908	848	ø 28	60	50	8	31,0	5,0	8 x 7 x 50	220
SK 6.07	**20 - 112**	1026	946	ø 38	80	70	10	41,0	5,0	10 x 8 x 70	**125 - 450**	958	898	ø 28	60	50	8	31,0	5,0	8 x 7 x 50	222
SK 7.07	**18 - 50**	1167	1057	ø 48	110	100	14	51,5	5,0	14 x 9 x 100	**112 - 400**	1065	1005	ø 28	60	50	8	31,0	5,0	8 x 7 x 50	226
	56 - 100	1137	1057	ø 38	80	70	10	41,0	5,0	10 x 8 x 70											
SK 8.07	**20 - 56**	1222	1112	ø 48	110	100	14	51,5	5,0	14 x 9 x 100	**125 - 450**	1120	1060	ø 28	60	50	8	31,0	5,0	8 x 7 x 50	228
	63 - 112	1192	1112	ø 38	80	70	10	41,0	5,0	10 x 8 x 70											
SK 9.07	**18 - 50**	1322	1212	ø 50	110	90	14	54,5	10,0	14 x 9 x 90	**112 - 400**	1262	1182	ø 38	80	70	10	41,0	5,0	10 x 8 x 70	230
	56 - 100	1312	1212	ø 40	100	80	12	43,0	10,0	12 x 8 x 80											
SK 10.07	**20 - 56**	1387	1277	ø 50	110	90	14	54,5	10,0	14 x 9 x 90	**125 - 450**	1337	1257	ø 38	80	70	10	41,0	5,0	10 x 8 x 70	232
	63 - 112	1377	1277	ø 40	100	80	12	43,0	10,0	12 x 8 x 80											
SK 11.07	**12,6 - 45**	1564	1424	ø 70	140	125	20	74,5	7,5	20 x 12 x 125	**80 - 400**	1481	1371	ø 50	110	90	14	54,5	10,0	14 x 9 x 90	234
	50 - 71	1534	1424	ø 50	110	90	14	54,5	10,0	14 x 9 x 90											
SK 12.07	**12,6 - 45**	1782	1612	ø 80	170	140	22	85,0	15,0	22 x 14 x 140	**80 - 400**	1634	1524	ø 50	110	90	14	54,5	10,0	14 x 9 x 90	236
	50 - 71	1752	1612	ø 70	140	125	20	74,5	7,5	20 x 12 x 125											
SK 13.07	**12,6 - 45**	1997	1827	ø 80	170	140	22	85,0	15,0	22 x 14 x 140	**80 - 400**	1907	1767	ø 70	140	125	20	74,5	7,5	20 x 12 x 125	238
	50 - 71	1967	1827	ø 70	140	125	20	74,5	7,5	20 x 12 x 125											
SK 14.07	**20 - 50**	2082	1912	ø 80	170	140	22	85,0	15,0	22 x 14 x 140	**100 - 400**	2052	1912	ø 70	140	125	20	74,5	7,5	20 x 12 x 125	240
	55 - 90	2052	1912	ø 70	140	125	20	74,5	7,5	20 x 12 x 125											
SK 15.07	**12,6 - 45**	2332	2132	ø100	210	180	28	106	15,0	28 x 16 x 180	**80 - 400**	2192	2052	ø 70	140	125	20	74,5	7,5	20 x 12 x 125	242
	50 - 71	2302	2132	ø 80	170	140	22	85,0	15,0	22 x 14 x 140											

* values in brakets at option „DRY“

SK 5407 / 5507 V *

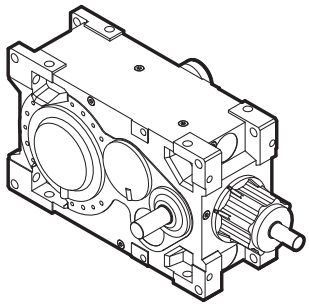

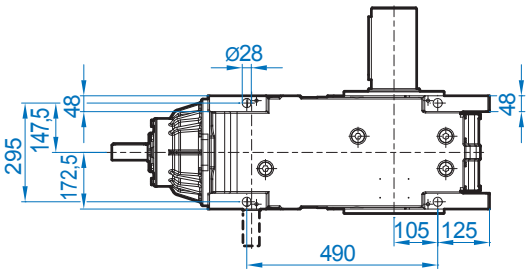

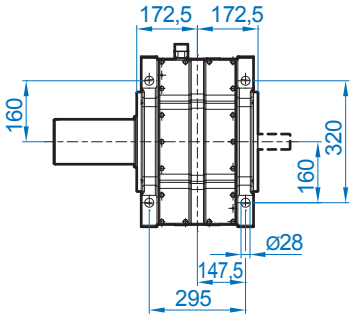

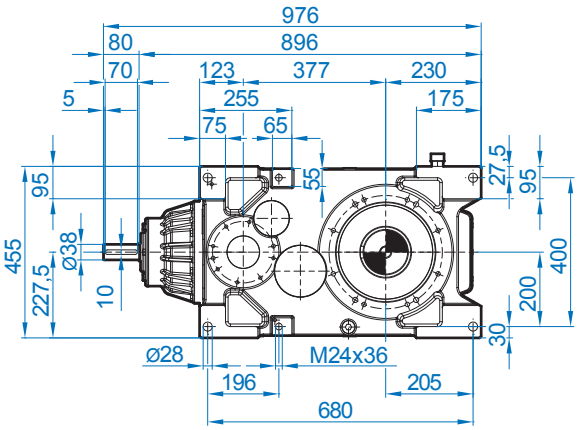

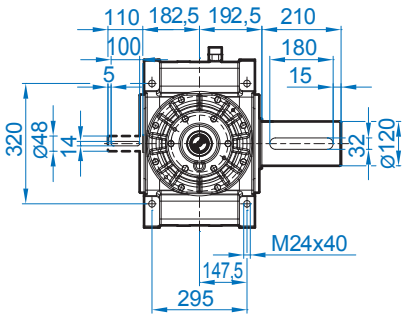

SK 5407 / 5507 A *

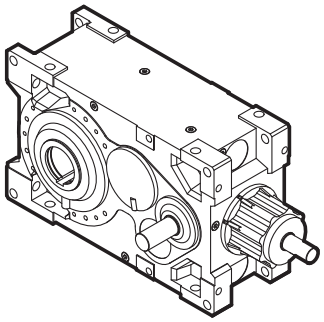

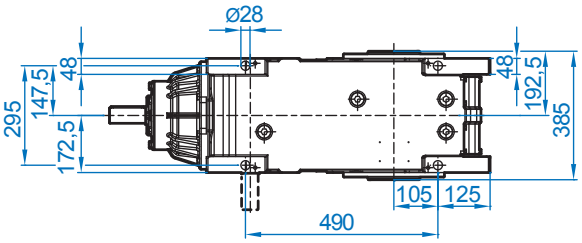

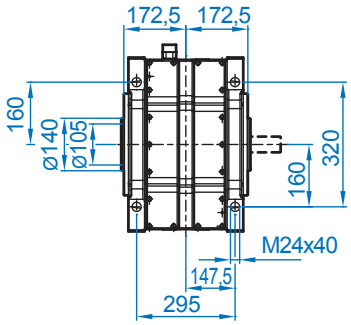

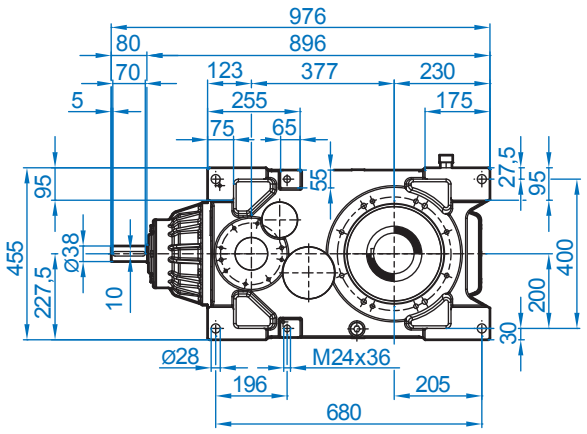

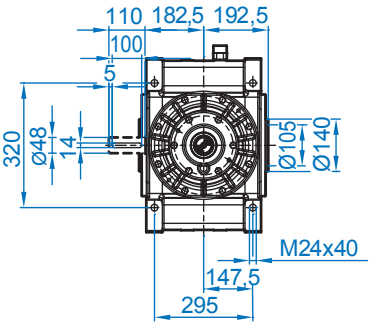

* Dimensions for option "DRY" please see 🕮 220-221

SK 5407 / SK 5507

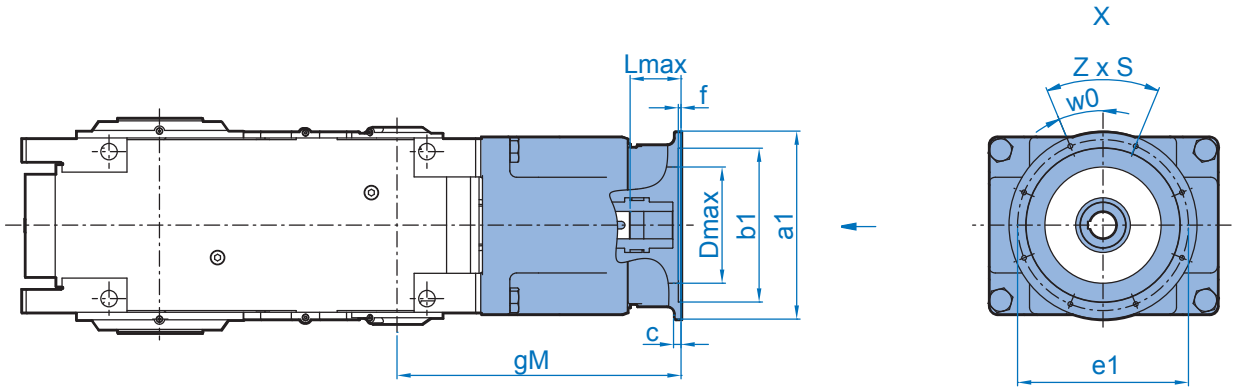

			gM	ø a1	ø b1	ø e1	c	f	z x s	w0°°	ø Dmax	Lmax
SK 5407	IEC [1]	100	381,5	250	180	215	11	4	4 x 14,5	0	160	89
		112	381,5	250	180	215	11	4	4 x 14,5	0	160	89
		132	406,5	300	230	265	12	4	4 x 14,5	0	210	114
		160	436,5	350	250	300	15	6,5	4 x 17,5	45	220	144
		180	436,5	350	250	300	15	6,5	4 x 17,5	45	220	144
		200	436,5	400	300	350	17	6,5	4 x 17,5	45	250	144
		225	466,5	450	350	400	18	6,5	8 x 17,5	22,5	250	174
		250	466,5	550	450	500	22	8	8 x M16	22,5	250	174
		280	466,5	550	450	500	22	8	8 x M16	22,5	250	174
SK 5507	IEC [1]	100	381,5	250	180	215	11	4	4 x 14,5	0	160	89
		112	381,5	250	180	215	11	4	4 x 14,5	0	160	89
		132	406,5	300	230	265	12	4	4 x 14,5	0	210	114
		160	436,5	350	250	300	15	6,5	4 x 17,5	45	220	144
		180	436,5	350	250	300	15	6,5	4 x 17,5	45	220	144
		200	436,5	400	300	350	17	6,5	4 x 17,5	45	250	144
		225	466,5	450	350	400	18	6,5	8 x 17,5	22,5	250	174
		250	466,5	550	450	500	22	8	8 x M16	22,5	250	174
		280	466,5	550	450	500	22	8	8 x M16	22,5	250	174

[1] Type designation and dimensions up to 200kW correspond to NORD motors

			gM	ø a1	ø b1	ø e1	c	f	z x s	w0°°	ø Dmax	Lmax
SK 5407	NEMA	254/256 TC	537	350	215,9	184,15	38	4	4 x 1/2-13	45	220	113
		284/286 TC	537	350	266,7	228,6	38	4	4 x 1/2-13	45	220	113
		324/326 TC	550	400	317,5	279,4	51	4	4 x 5/8-11	45	265	181
		364/365 TC	580	450	317,5	279,4	52	4	4 x 5/8-11	45	280	211
		404/405 TC	594	550	317,5	279,4	70	6	4 x 5/8-11	45	330	225
SK 5507	NEMA	254/256 TC	463	350	215,9	184,15	38	4	4 x 1/2-13	45	220	162
		284/286 TC	463	350	266,7	228,6	38	4	4 x 1/2-13	45	220	162

SK 6407/6507 V *

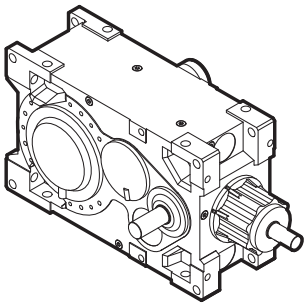

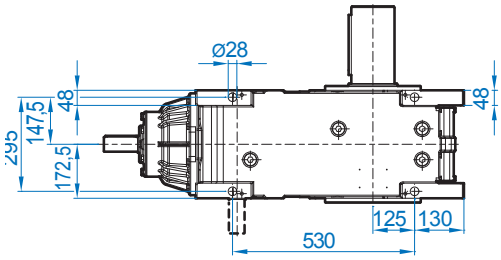

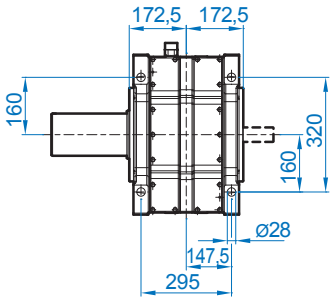

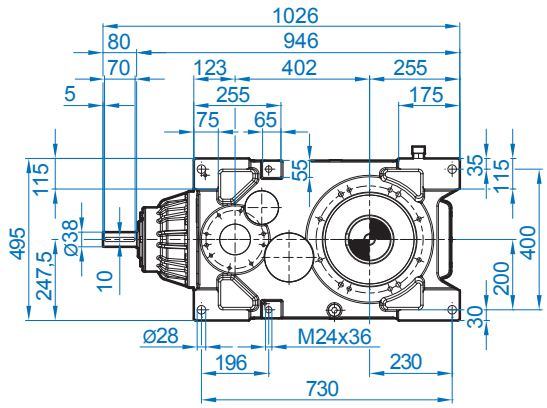

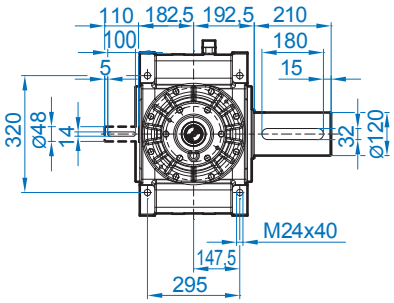

SK 6407/6507 A *

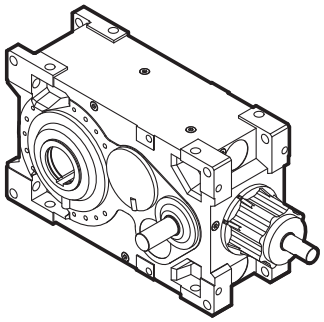

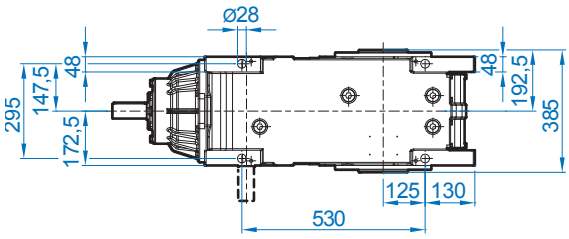

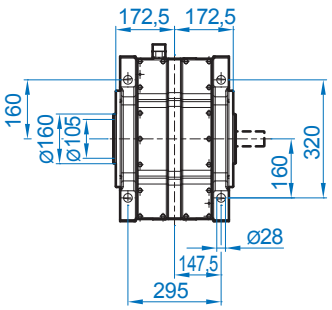

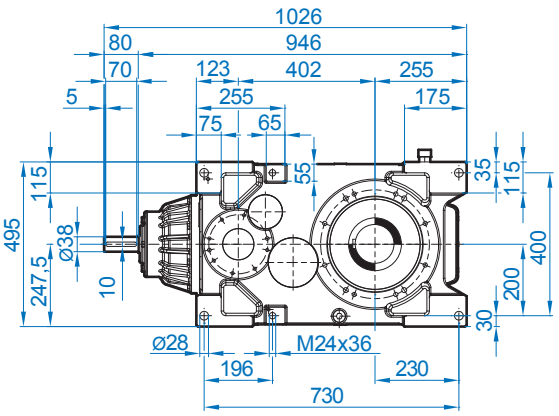

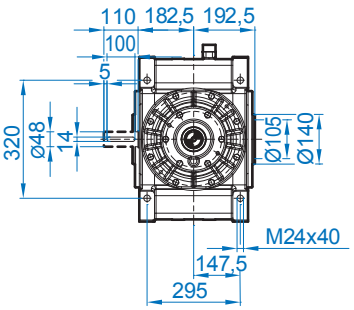

* Dimensions for option "DRY" please see 🕮 220-21

SK 6407 / SK 6507

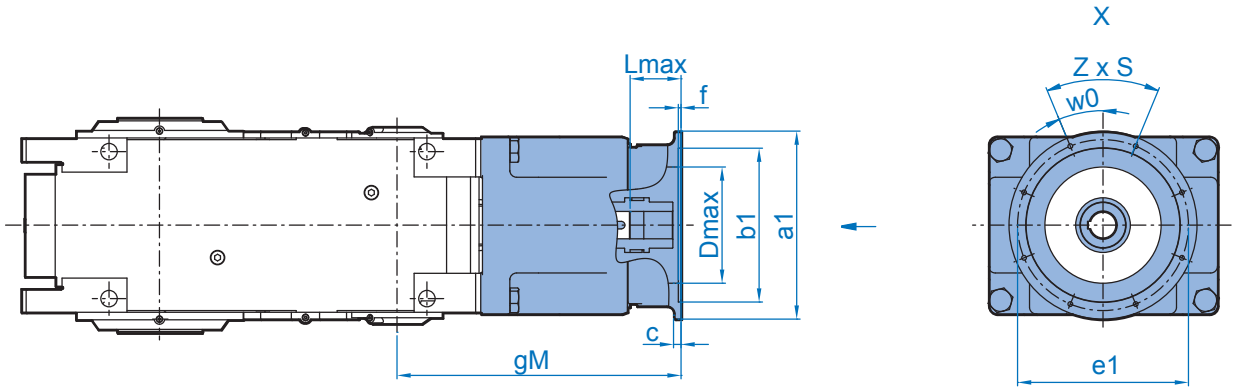

			gM	ø a1	ø b1	ø e1	c	f	z x s	w0°	ø Dmax	Lmax
SK 6407	IEC [1]	100	381,5	250	180	215	11	4	4 x 14,5	0	160	89
		112	381,5	250	180	215	11	4	4 x 14,5	0	160	89
		132	406,5	300	230	265	12	4	4 x 14,5	0	210	114
		160	436,5	350	250	300	15	6,5	4 x 17,5	45	220	144
		180	436,5	350	250	300	15	6,5	4 x 17,5	45	220	144
		200	436,5	400	300	350	17	6,5	4 x 17,5	45	250	144
		225	466,5	450	350	400	18	6,5	8 x 17,5	22,5	250	174
		250	466,5	550	450	500	22	8	8 x M16	22,5	250	174
		280	466,5	550	450	500	22	8	8 x M16	22,5	250	174
SK 6507	IEC [1]	100	381,5	250	180	215	11	4	4 x 14,5	0	160	89
		112	381,5	250	180	215	11	4	4 x 14,5	0	160	89
		132	406,5	300	230	265	12	4	4 x 14,5	0	210	114
		160	436,5	350	250	300	15	6,5	4 x 17,5	45	220	144
		180	436,5	350	250	300	15	6,5	4 x 17,5	45	220	144
		200	436,5	400	300	350	17	6,5	4 x 17,5	45	250	144
		225	466,5	450	350	400	18	6,5	8 x 17,5	22,5	250	174
		250	466,5	550	450	500	22	8	8 x M16	22,5	250	174
		280	466,5	550	450	500	22	8	8 x M16	22,5	250	174

[1] Type designation and dimensions up to 200kW correspond to NORD motors

			gM	ø a1	ø b1	ø e1	c	f	z x s	w0°	ø Dmax	Lmax
SK 6407	NEMA	254/256 TC	537	350	215,9	184,15	38	4	4 x 1/2-13	45	220	113
		284/286 TC	537	350	266,7	228,6	38	4	4 x 1/2-13	45	220	113
		324/326 TC	550	400	317,5	279,4	51	4	4 x 5/8-11	45	265	181
		364/365 TC	580	450	317,5	279,4	52	4	4 x 5/8-11	45	280	211
		404/405 TC	594	550	317,5	279,4	70	6	4 x 5/8-11	45	330	225
SK 6507	NEMA	254/256 TC	463	350	215,9	184,15	38	4	4 x 1/2-13	45	220	162
		284/286 TC	463	350	266,7	228,6	38	4	4 x 1/2-13	45	220	162

SK 7407 / 7507 V *

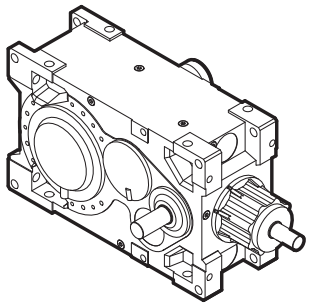

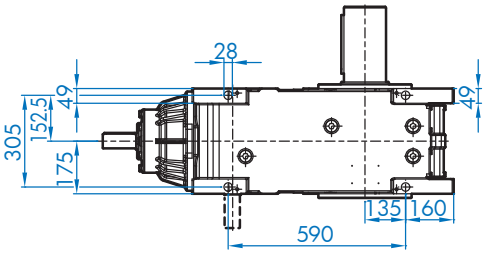

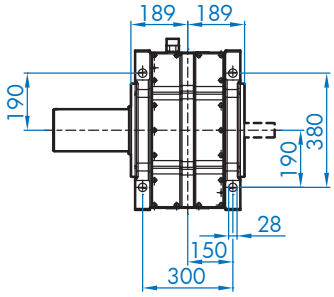

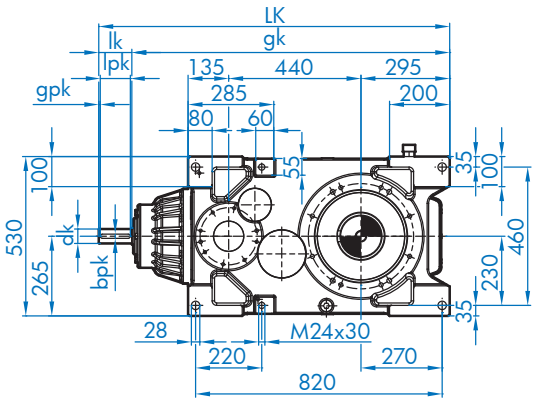

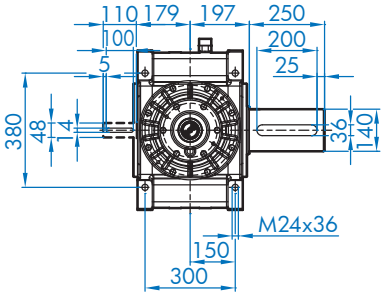

SK 7407 / 7507 A *

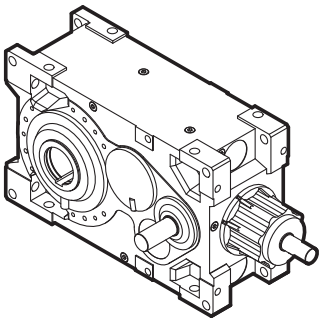

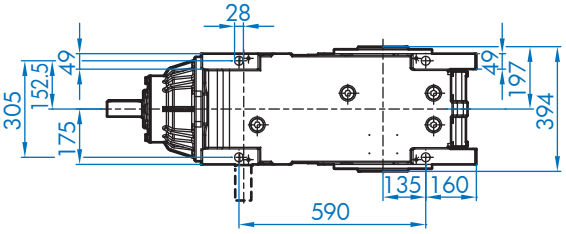

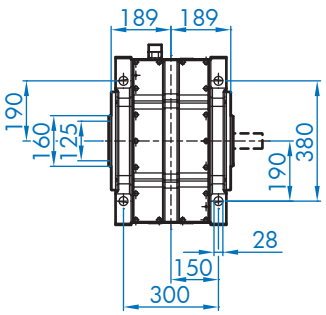

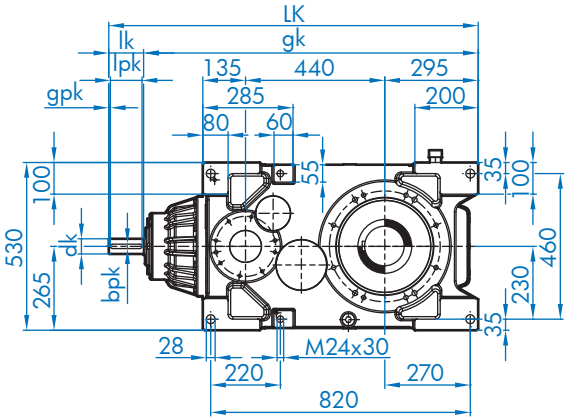

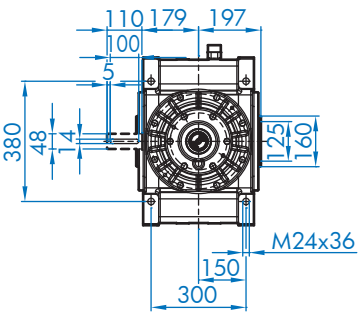

* Dimensions for option "DRY" please see 📖 220-221

SK 7407 / SK 7507

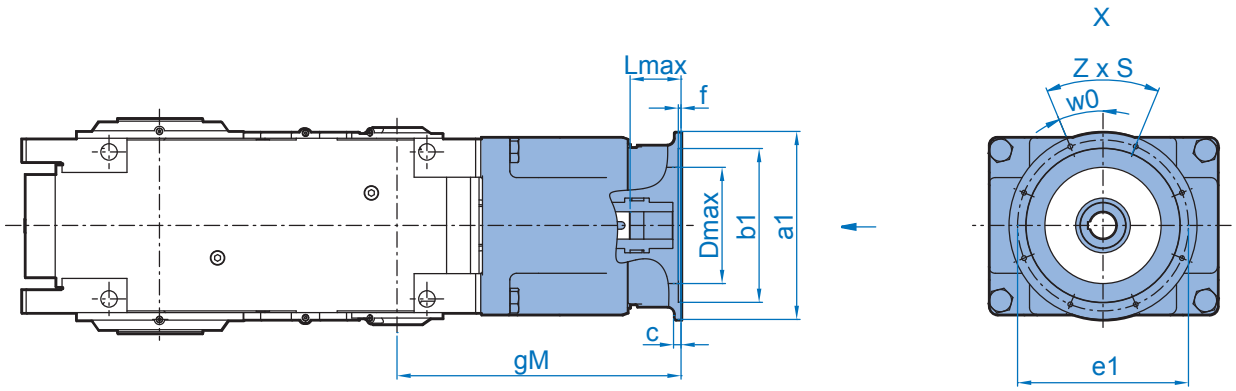

			gM	ø a1	ø b1	ø e1	c	f	z x s	w0°	ø Dmax	Lmax
SK 7407	IEC [1]	100	527	250	180	215	11	4,0	4 x 14,5	0	160	95 / 125
		112	527	250	180	215	11	4,0	4 x 14,5	0	160	95 / 125
		132	547	300	230	265	12	4,0	4 x 14,5	0	210	115 / 145
		160	577	350	250	300	15	6,5	4 x 17,5	45,0	220	145 / 175
		180	577	350	250	300	15	6,5	4 x 17,5	45,0	220	145 / 175
		200	577	400	300	350	17	6,5	4 x 17,5	45,0	250	145 / 175
		225	607	450	350	400	18	6,5	8 x 17,5	22,5	250	175 / 205
		250	607	550	450	500	22	8,0	8 x M16	22,5	250	175 / 205
		280	607	550	450	500	22	8,0	8 x M16	22,5	250	175 / 205
		315	637	660	550	600	22	8,0	8 x 22	22,5	250	205 / 235
	TN [2]	315	637	800	680	740	25	8,0	8 x 22	22,5	250	205 / 235
		355	637	900	780	840	25	8,0	8 x 22	22,5	250	205 / 235
SK 7507	IEC [1]	100	425	250	180	215	11	4,0	4 x 14,5	0	160	95
		112	425	250	180	215	11	4,0	4 x 14,5	0	160	95
		132	445	300	230	265	12	4,0	4 x 14,5	0	210	115
		160	475	350	250	300	15	6,5	4 x 17,5	45,0	220	145
		180	475	350	250	300	15	6,5	4 x 17,5	45,0	220	145
		200	475	400	300	350	17	6,5	4 x 17,5	45,0	250	145
		225	505	450	350	400	18	6,5	8 x 17,5	22,5	250	175
		250	505	550	450	500	22	8,0	8 x M16	22,5	250	175
		280	505	550	450	500	22	8,0	8 x M16	22,5	250	175
		315	535	660	550	600	22	8,0	8 x 22	22,5	250	205
	TN [2]	315	535	800	680	740	25	8,0	8 x 22	22,5	250	205
		355	535	900	780	840	25	8,0	8 x 22	22,5	250	205

[1] Type designation and dimensions up to 200kW correspond to NORD motors [2] Data for Transnorm motors available on request

			gM	ø a1	ø b1	ø e1	c	f	z x s	w0°	ø Dmax	Lmax
SK 7407	NEMA	254/256 TC	600	350	215,9	184,15	38	4	4 x 1/2-13	45	220	168 / 198
		284/286 TC	600	350	266,7	228,6	38	4	4 x 1/2-13	45	220	168 / 198
		324/326 TC	611	400	317,5	279,4	51	4	4 x 5/8-11	45	265	179 / 209
		364/365 TC	641	450	317,5	279,4	52	4	4 x 5/8-11	45	280	209 / 239
		404/405 TC	655	550	317,5	279,4	70	6	4 x 5/8-11	45	330	223 / 253
		444/445 TC	687	550	406,4	355,6	102	6	4 x 5/8-11	45	330	255 / 285
		447/449 TC	682	660	406,4	355,6	67	6	4 x 5/8-11	45	330	250 / 280
SK 7507	NEMA	254/256 TC	498	350	215,9	184,15	38	4	4 x 1/2-13	45	220	168
		284/286 TC	498	350	266,7	228,6	38	4	4 x 1/2-13	45	220	168
		324/326 TC	509	400	317,5	279,4	51	4	4 x 5/8-11	45	265	179
		364/365 TC	539	450	317,5	279,4	52	4	4 x 5/8-11	45	280	209
		404/405 TC	553	550	317,5	279,4	70	6	4 x 5/8-11	45	330	223
		444/445 TC	585	550	406,4	355,6	102	6	4 x 5/8-11	45	330	255
		447/449 TC	580	660	406.4	355,6	67	6	4 x 5/8-11	45	330	250

SK 8407 / 8507 V *

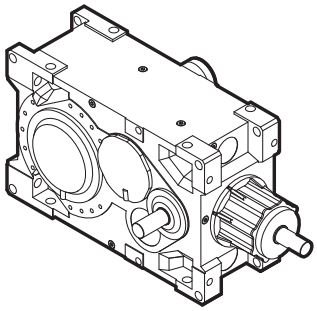

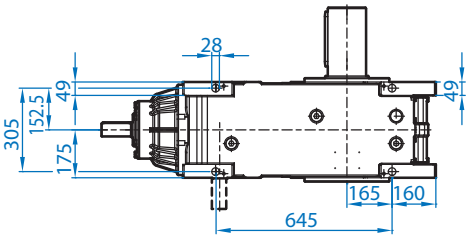

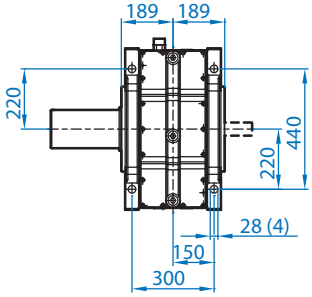

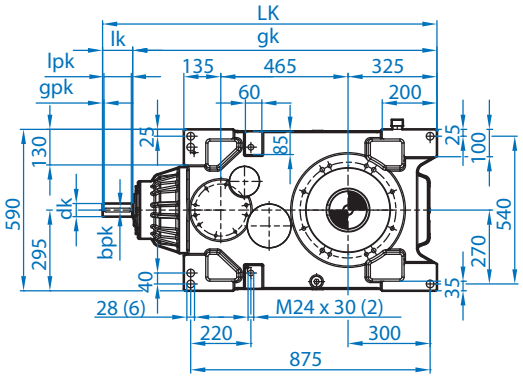

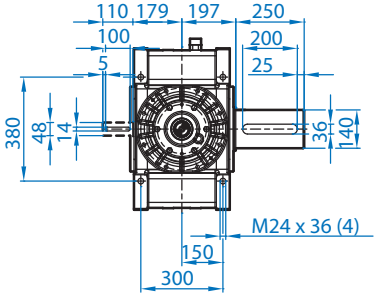

SK 8407 / 8507 A *

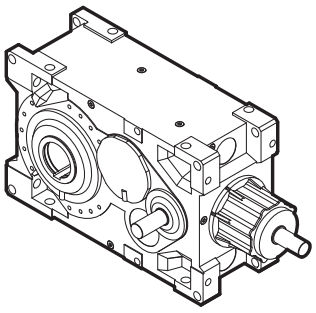

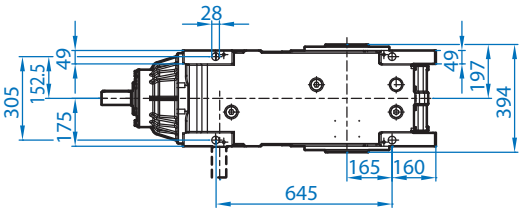

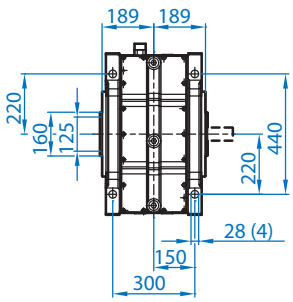

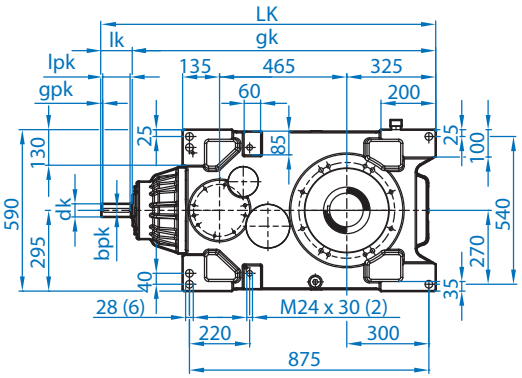

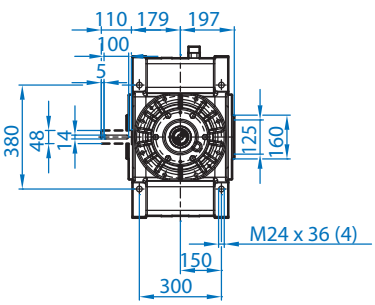

* Dimensions for option "DRY" please see 📖 220-221

SK 8407 / SK 8507

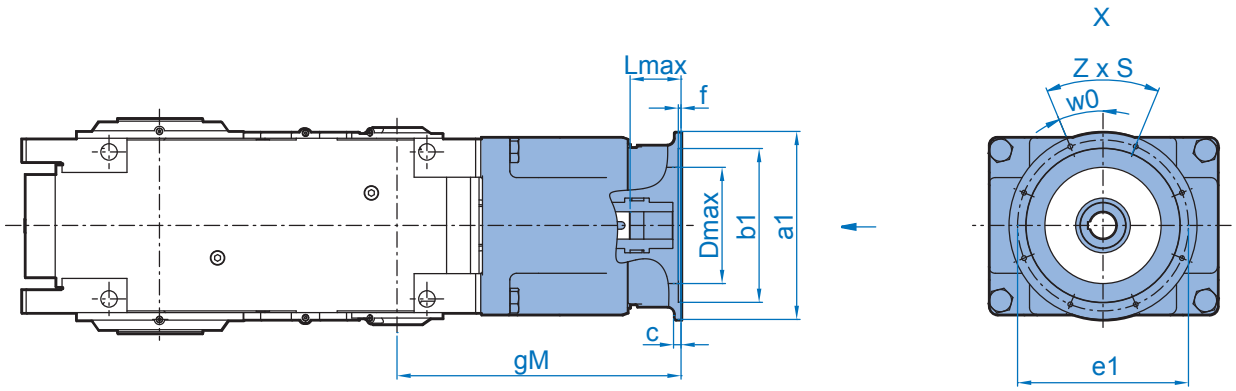

			gM	ø a1	ø b1	ø e1	c	f	z x s	w0°	ø Dmax	Lmax
SK 8407	IEC [1]	100	527	250	180	215	11	4,0	4 x 14,5	0	160	95 / 125
		112	527	250	180	215	11	4,0	4 x 14,5	0	160	95 / 125
		132	547	300	230	265	12	4,0	4 x 14,5	0	210	115 / 145
		160	577	350	250	300	15	6,5	4 x 17,5	45,0	220	145 / 175
		180	577	350	250	300	15	6,5	4 x 17,5	45,0	220	145 / 175
		200	577	400	300	350	17	6,5	4 x 17,5	45,0	250	145 / 175
		225	607	450	350	400	18	6,5	8 x 17,5	22,5	250	175 / 205
		250	607	550	450	500	22	8,0	8 x M16	22,5	250	175 / 205
		280	607	550	450	500	22	8,0	8 x M16	22,5	250	175 / 205
		315	637	660	550	600	22	8,0	8 x 22	22,5	250	205 / 235
	TN [2]	315	637	800	680	740	25	8,0	8 x 22	22,5	250	205 / 235
		355	637	900	780	840	25	8,0	8 x 22	22,5	250	205 / 235
SK 8507	IEC [1]	100	425	250	180	215	11	4,0	4 x 14,5	0	160	75
		112	425	250	180	215	11	4,0	4 x 14,5	0	160	75
		132	445	300	230	265	12	4,0	4 x 14,5	0	210	95
		160	475	350	250	300	15	6,5	4 x 17,5	45,0	220	125
		180	475	350	250	300	15	6,5	4 x 17,5	45,0	220	125
		200	475	400	300	350	17	6,5	4 x 17,5	45,0	250	125
		225	505	450	350	400	18	6,5	8 x 17,5	22,5	250	155
		250	505	550	450	500	22	8,0	8 x M16	22,5	250	155
		280	505	550	450	500	22	8,0	8 x M16	22,5	250	155
		315	535	660	550	600	22	8,0	8 x 22	22,5	250	185
	TN [2]	315	535	800	680	740	25	8,0	8 x 22	22,5	250	185
		355	535	900	780	840	25	8,0	8 x 22	22,5	250	185

[1] Type designation and dimensions up to 200kW correspond to NORD motors [2] Data for Transnorm motors available on request

			gM	ø a1	ø b1	ø e1	c	f	z x s	w0°	ø Dmax	Lmax
SK 8407	NEMA	254/256 TC	600	350	215,9	184,15	38	4	4 x 1/2-13	45	220	168 / 198
		284/286 TC	600	350	266,7	228,6	38	4	4 x 1/2-13	45	220	168 / 198
		324/326 TC	611	400	317,5	279,4	51	4	4 x 5/8-11	45	265	179 / 209
		364/365 TC	641	450	317,5	279,4	52	4	4 x 5/8-11	45	280	209 / 239
		404/405 TC	655	550	317,5	279,4	70	6	4 x 5/8-11	45	330	223 / 253
		444/445 TC	687	550	406,4	355,6	102	6	4 x 5/8-11	45	330	255 / 285
		447/449 TC	682	660	406,4	355,6	67	6	4 x 5/8-11	45	330	250 / 280
SK 8507	NEMA	254/256 TC	498	350	215,9	184,15	38	4	4 x 1/2-13	45	220	148
		284/286 TC	498	350	266,7	228,6	38	4	4 x 1/2-13	45	220	148
		324/326 TC	509	400	317,5	279,4	51	4	4 x 5/8-11	45	265	159
		364/365 TC	539	450	317,5	279,4	52	4	4 x 5/8-11	45	280	189
		404/405 TC	553	550	317,5	279,4	70	6	4 x 5/8-11	45	330	203
		444/445 TC	585	550	406,4	355,6	102	6	4 x 5/8-11	45	330	235
		447/449 TC	580	660	406,4	355,6	67	6	4 x 5/8-11	45	330	230

SK 9407 / 9507 V

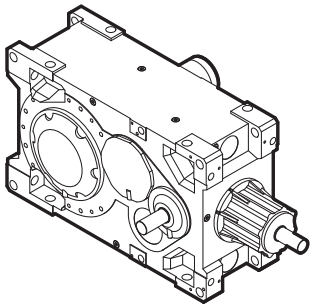

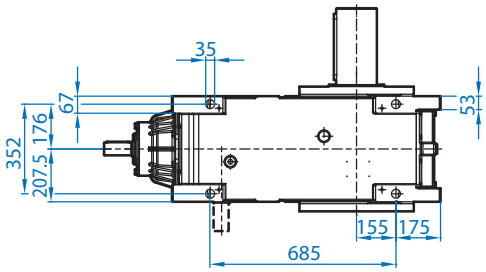

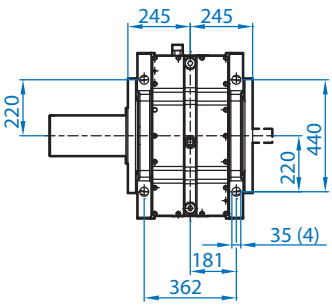

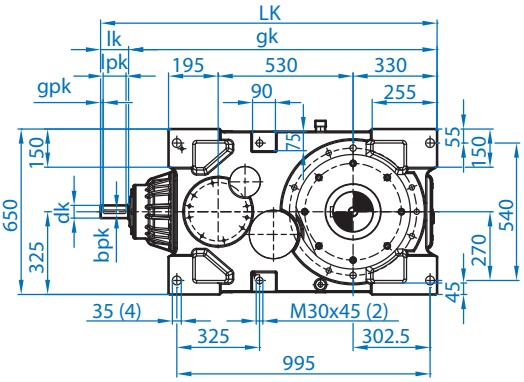

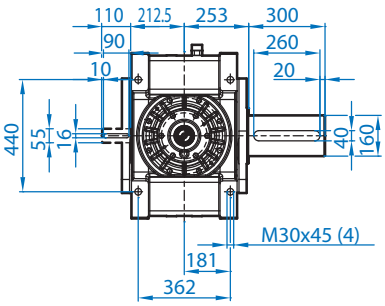

SK 9407 / 9507 A *

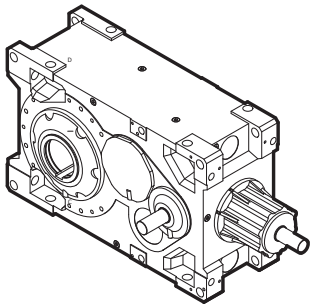

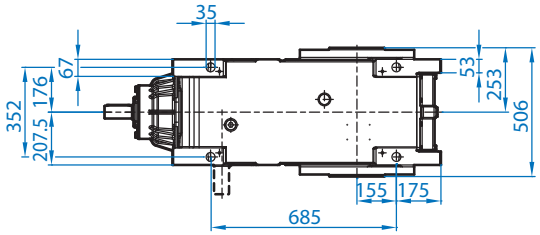

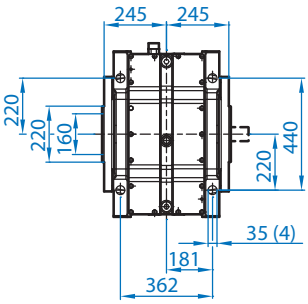

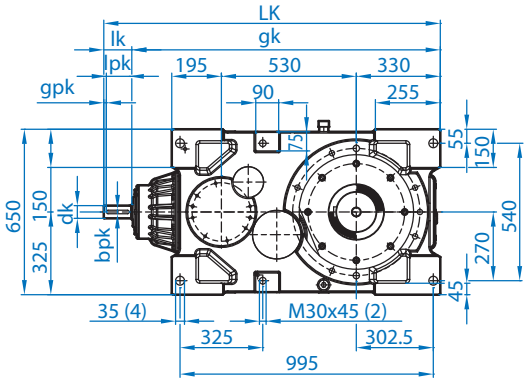

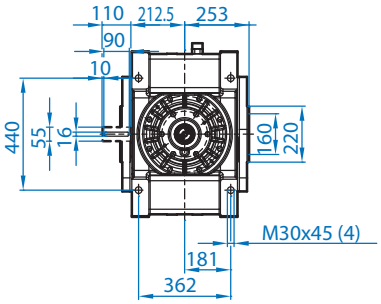

* Dimensions for option "DRY" please see 📖 220-21

SK 9407 / SK 9507

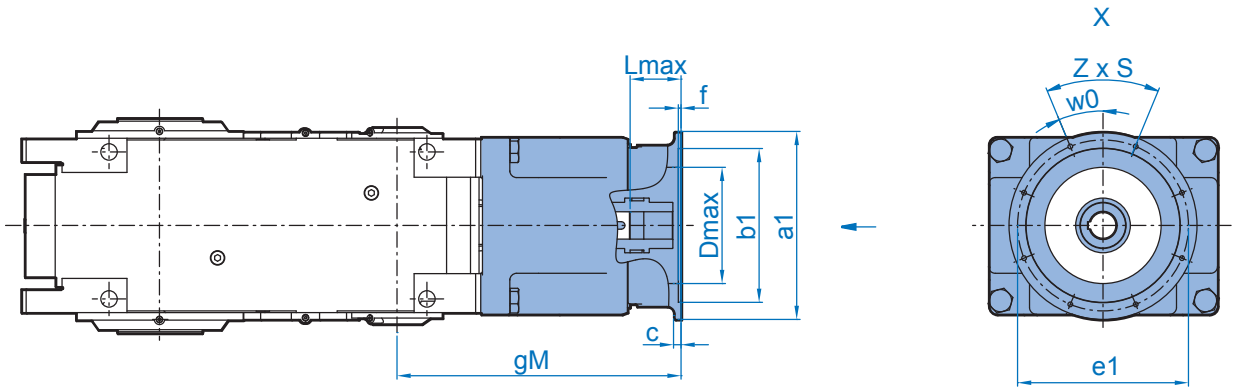

			gM	ø a1	ø b1	ø e1	c	f	z x s	w0°°	ø Dmax	Lmax
SK 9407	IEC [1]	100	587	250	180	215	11	4,0	4 x 14,5	0	160	125 / 135
		112	587	250	180	215	11	4,0	4 x 14,5	0	160	125 / 135
		132	607	300	230	265	12	4,0	4 x 14,5	0	210	145 / 155
		160	637	350	250	300	15	6,5	4 x 17,5	45,0	220	175 / 185
		180	637	350	250	300	15	6,5	4 x 17,5	45,0	220	175 / 185
		200	637	400	300	350	17	6,5	4 x 17,5	45,0	250	175 / 185
		225	667	450	350	400	18	6,5	8 x 17,5	22,5	250	205 / 215
		250	667	550	450	500	22	8,0	8 x M16	22,5	250	205 / 215
		280	667	550	450	500	22	8,0	8 x M16	22,5	250	205 / 215
		315	697	660	550	600	22	8,0	8 x 22	22,5	250	235 / 245
	TN [2]	315	697	800	680	740	25	8,0	8 x 22	22,5	250	235 / 245
		355	697	900	780	840	25	8,0	8 x 22	22,5	250	235 / 245
SK 9507	IEC [1]	100	485	250	180	215	11	4,0	4 x 14,5	0	160	83
		112	485	250	180	215	11	4,0	4 x 14,5	0	160	83
		132	505	300	230	265	12	4,0	4 x 14,5	0	210	103
		160	535	350	250	300	15	6,5	4 x 17,5	45,0	220	133
		180	535	350	250	300	15	6,5	4 x 17,5	45,0	220	133
		200	535	400	300	350	17	6,5	4 x 17,5	45,0	250	133
		225	565	450	350	400	18	6,5	8 x 17,5	22,5	250	163
		250	565	550	450	500	22	8,0	8 x M16	22,5	250	163
		280	565	550	450	500	22	8,0	8 x M16	22,5	250	163
		315	595	660	550	600	22	8,0	8 x 22	22,5	250	193
	TN [2]	315	595	800	680	740	25	8,0	8 x 22	22,5	250	193
		355	595	900	780	840	25	8,0	8 x 22	22,5	250	193

[1] Type designation and dimensions up to 200kW correspond to NORD motors [2] Data for Transnorm motors available on request

			gM	ø a1	ø b1	ø e1	c	f	z x s	w0°°	ø Dmax	Lmax
SK 9407	NEMA	254/256 TC	660	350	215,9	184,15	38	4	4 x 1/2-13	45	220	198 / 208
		284/286 TC	660	350	266,7	228,6	38	4	4 x 1/2-13	45	220	198 / 208
		324/326 TC	671	400	317,5	279,4	51	4	4 x 5/8-11	45	265	209 / 219
		364/365 TC	701	450	317,5	279,4	52	4	4 x 5/8-11	45	280	209 / 219
		404/405 TC	715	550	317,5	279,4	70	6	4 x 5/8-11	45	330	253 / 263
		444/445 TC	747	550	406,4	355,6	102	6	4 x 5/8-11	45	330	285 / 295
		447/449 TC	742	660	406,4	355,6	67	6	4 x 5/8-11	45	330	280 / 290
SK 9507	NEMA	254/256 TC	558	350	215,9	184,15	38	4	4 x 1/2-13	45	220	156
		284/286 TC	558	350	266,7	228,6	38	4	4 x 1/2-13	45	220	156
		324/326 TC	569	400	317,5	279,4	51	4	4 x 5/8-11	45	265	167
		364/365 TC	599	450	317,5	279,4	52	4	4 x 5/8-11	45	280	197
		404/405 TC	613	550	317,5	279,4	70	6	4 x 5/8-11	45	330	211
		444/445 TC	645	550	406,4	355,6	102	6	4 x 5/8-11	45	330	243
		447/449 TC	640	660	406,4	355,6	67	6	4 x 5/8-11	45	330	238

SK 10407 / 10507 V

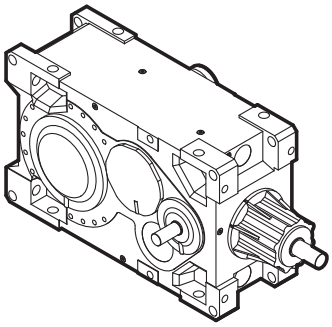

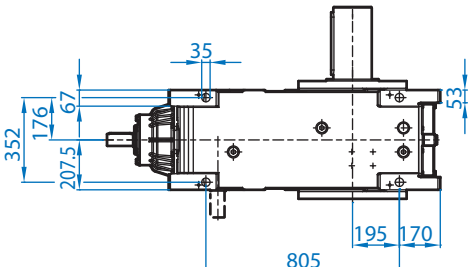

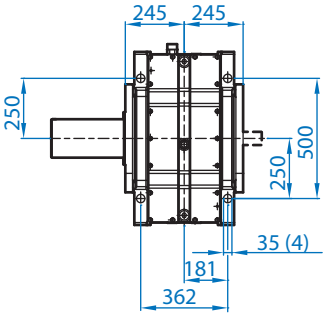

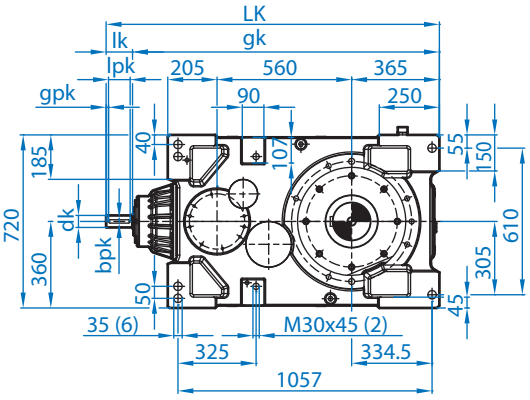

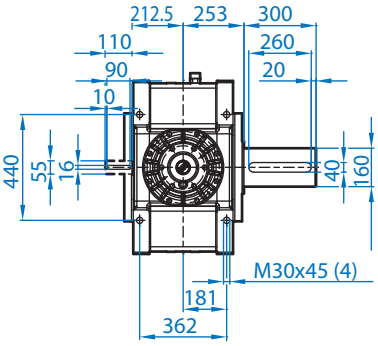

SK 10407 / 10507 A *

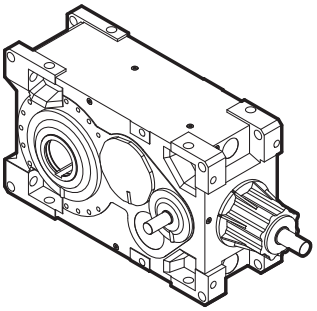

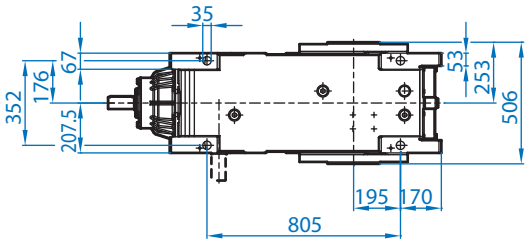

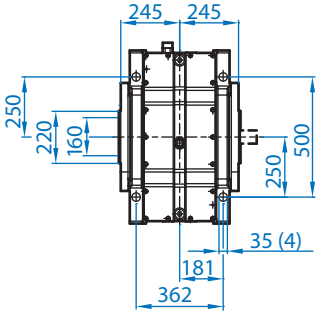

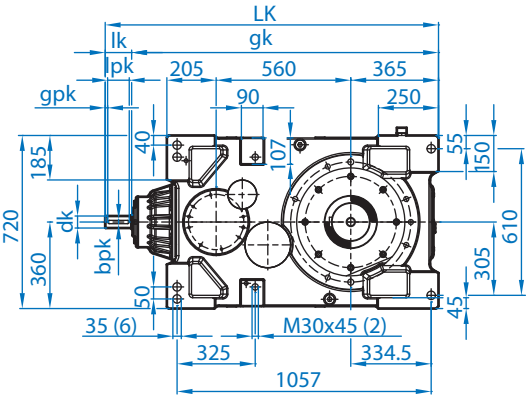

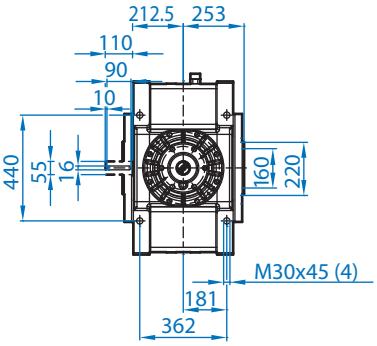

* Dimensions for option "DRY" please see 📖 220-221

SK 10407 / SK 10507

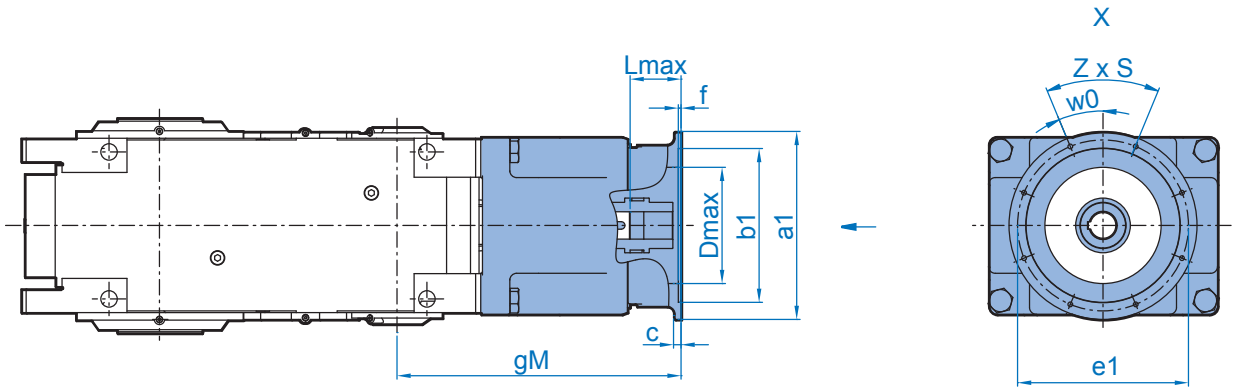

			gM	ø a1	ø b1	ø e1	c	f	z x s	w0°	ø Dmax	Lmax
SK 10407	IEC [1]	100	597	250	180	215	11	4,0	4 x 14,5	0	160	135 / 145
		112	597	250	180	215	11	4,0	4 x 14,5	0	160	135 / 145
		132	617	300	230	265	12	4,0	4 x 14,5	0	210	155 / 165
		160	647	350	250	300	15	6,5	4 x 17,5	45,0	220	185 / 195
		180	647	350	250	300	15	6,5	4 x 17,5	45,0	220	185 / 195
		200	647	400	300	350	17	6,5	4 x 17,5	45,0	250	185 / 195
		225	677	450	350	400	18	6,5	8 x 17,5	22,5	250	215 / 225
		250	677	550	450	500	22	8,0	8 x M16	22,5	250	215 / 225
		280	677	550	450	500	22	8,0	8 x M16	22,5	250	215 / 225
		315	707	660	550	600	22	8,0	8 x 22	22,5	250	245 / 255
	TN [2]	315	707	800	680	740	25	8,0	8 x 22	22,5	250	245 / 255
		355	707	900	780	840	25	8,0	8 x 22	22,5	250	245 / 255
SK 10507	IEC [1]	100	495	250	180	215	11	4,0	4 x 14,5	0	160	83
		112	495	250	180	215	11	4,0	4 x 14,5	0	160	83
		132	515	300	230	265	12	4,0	4 x 14,5	0	210	103
		160	545	350	250	300	15	6,5	4 x 17,5	45,0	220	133
		180	545	350	250	300	15	6,5	4 x 17,5	45,0	220	133
		200	545	400	300	350	17	6,5	4 x 17,5	45,0	250	133
		225	575	450	350	400	18	6,5	8 x 17,5	22,5	250	163
		250	575	550	450	500	22	8,0	8 x M16	22,5	250	163
		280	575	550	450	500	22	8,0	8 x M16	22,5	250	163
		315	605	660	550	600	22	8,0	8 x 22	22,5	250	193
	TN [2]	315	605	800	680	740	25	8,0	8 x 22	22,5	250	193
		355	605	900	780	840	25	8,0	8 x 22	22,5	250	193

[1] Type designation and dimensions up to 200kW correspond to NORD motors [2] Data for Transnorm motors available on request

			gM	ø a1	ø b1	ø e1	c	f	z x s	w0°	ø Dmax	Lmax
SK 10407	NEMA	254/256 TC	670	350	215,9	184,15	38	4	4 x 1/2-13	45	220	208 / 218
		284/286 TC	670	350	266,7	228,6	38	4	4 x 1/2-13	45	220	208 / 218
		324/326 TC	681	400	317,5	279,4	51	4	4 x 5/8-11	45	265	219 / 229
		364/365 TC	711	450	317,5	279,4	52	4	4 x 5/8-11	45	280	249 / 259
		404/405 TC	725	550	317,5	279,4	70	6	4 x 5/8-11	45	330	263 / 273
		444/445 TC	757	550	406,4	355,6	102	6	4 x 5/8-11	45	330	295 / 305
		447/449 TC	752	660	406,4	355,6	67	6	4 x 5/8-11	45	330	290 / 300
SK 10507	NEMA	254/256 TC	568	350	215,9	184,15	38	4	4 x 1/2-13	45	220	156
		284/286 TC	568	350	266,7	228,6	38	4	4 x 1/2-13	45	220	156
		324/326 TC	579	400	317,5	279,4	51	4	4 x 5/8-11	45	265	167
		364/365 TC	609	450	317,5	279,4	52	4	4 x 5/8-11	45	280	197
		404/405 TC	623	550	317,5	279,4	70	6	4 x 5/8-11	45	330	211
		444/445 TC	655	550	406,4	355,6	102	6	4 x 5/8-11	45	330	243
		447/449 TC	650	660	406,4	355,6	67	6	4 x 5/8-11	45	330	238

SK 11407 / 11507 V

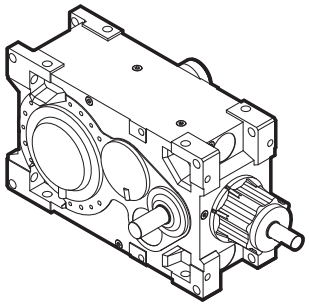

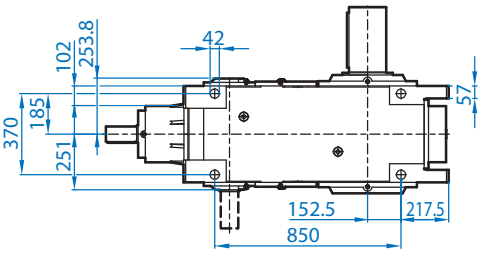

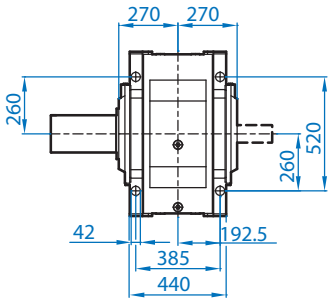

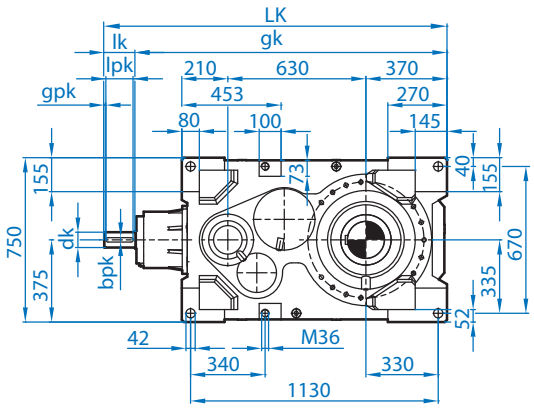

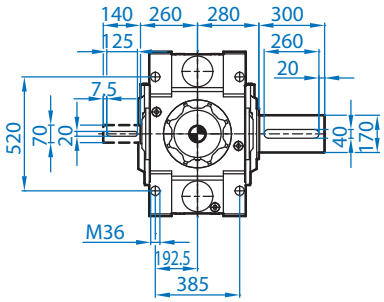

SK 11407 / 11507 A

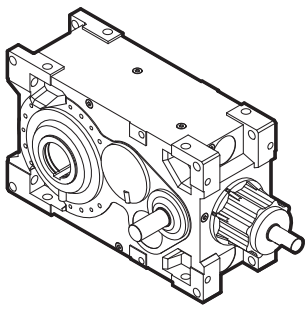

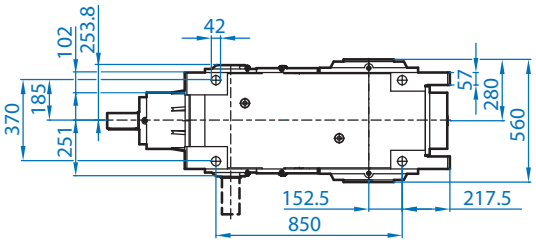

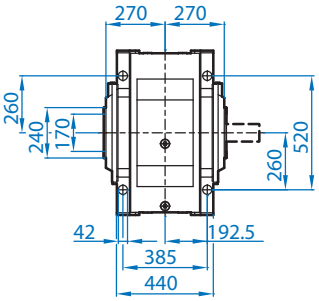

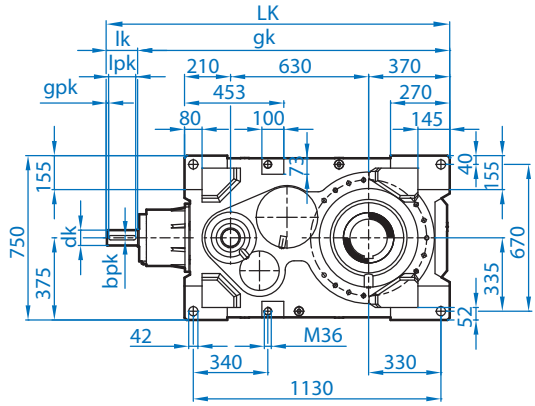

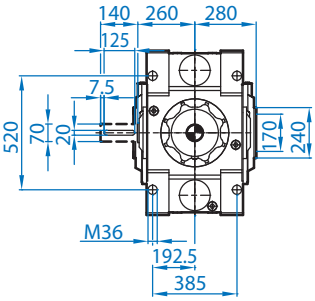

SK 11407 / SK 11507

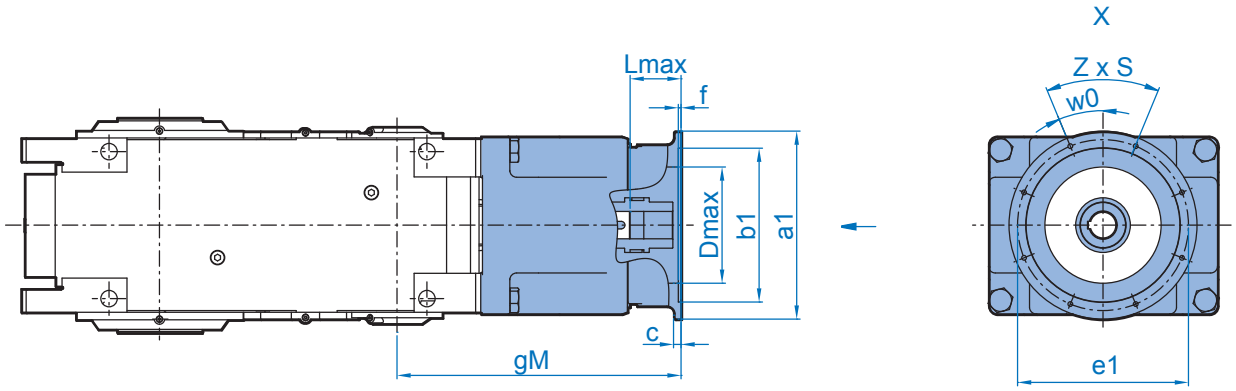

			gM	ø a1	ø b1	ø e1	c	f	z x s	w0°	ø Dmax	Lmax
SK 11407	IEC [1]	160	684	350	250	300	15	6,5	4 x 17,5	45,0	228	120 / 150
		180	684	350	250	300	15	6,5	4 x 17,5	45,0	228	120 / 150
		200	684	400	300	350	17	6,5	4 x 17,5	45,0	276	120 / 150
		225	714	450	350	400	18	6,5	8 x 17,5	22,5	290	150 / 180
		250	714	550	450	500	22	8,0	8 x M16	22,5	340	150 / 180
		280	714	550	450	500	22	8,0	8 x M16	22,5	340	150 / 180
		315	744	660	550	600	22	8,0	8 x 22	22,5	340	180 / 210
	TN [2]	315T	744	800	680	740	25	8,0	8 x 22	22,5	340	180 / 210
		355T	744	900	780	840	25	8,0	8 x 22	22,5	340	180 / 210
SK 11507	IEC [1]	160	601	350	250	300	15	6,5	4 x 17,5	45,0	228	120
		180	601	350	250	300	15	6,5	4 x 17,5	45,0	228	120
		200	601	400	300	350	17	6,5	4 x 17,5	45,0	276	120
		225	631	450	350	400	18	6,5	8 x 17,5	22,5	290	150
		250	631	550	450	500	22	8,0	8 x M16	22,5	340	150
		280	631	550	450	500	22	8,0	8 x M16	22,5	340	150
		315	661	660	550	600	22	8,0	8 x 22	22,5	340	180
	TN [2]	315T	661	800	680	740	25	8,0	8 x 22	22,5	340	180
		355T	661	900	780	840	25	8,0	8 x 22	22,5	340	180

[1] Type designation and dimensions up to 200kW correspond to NORD motors [2] Data for Transnorm motors available on request

			gM	ø a1	ø b1	ø e1	c	f	z x s	w0°	ø Dmax	Lmax
SK 11407	NEMA	254/256 TC	707	350	215.9	184,15	38	4	4 x 1/2-13	45	220	143 / 173
		284/286 TC	707	350	266.7	228,6	38	4	4 x 1/2-13	45	220	143 / 173
		324/326 TC	718	400	317.5	279,4	51	4	4 x 5/8-11	45	265	154 / 184
		364/365 TC	748	450	317.5	279,4	52	4	4 x 5/8-11	45	280	184 / 214
		404/405 TC	762	550	317.5	279,4	70	6	4 x 5/8-11	45	330	198 / 228
		444/445 TC	794	550	406.4	355,6	102	6	4 x 5/8-11	45	330	230 / 260
		447/449 TC	789	660	406.4	355,6	67	6	4 x 5/8-11	45	330	225 / 255
SK 11507	NEMA	254/256 TC	624	350	215.9	184,15	38	4	4 x 1/2-13	45	220	143
		284/286 TC	624	350	266.7	228,6	38	4	4 x 1/2-13	45	220	143
		324/326 TC	635	400	317.5	279,4	51	4	4 x 5/8-11	45	265	154
		364/365 TC	665	450	317.5	279,4	52	4	4 x 5/8-11	45	280	184
		404/405 TC	679	550	317.5	279,4	70	6	4 x 5/8-11	45	330	198
		444/445 TC	711	550	406.4	355,6	102	6	4 x 5/8-11	45	330	230
		447/449 TC	706	660	406.4	355,6	67	6	4 x 5/8-11	45	330	225

SK 12407 / 12507 V

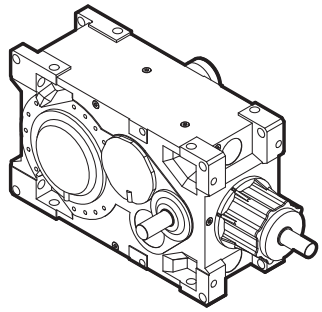

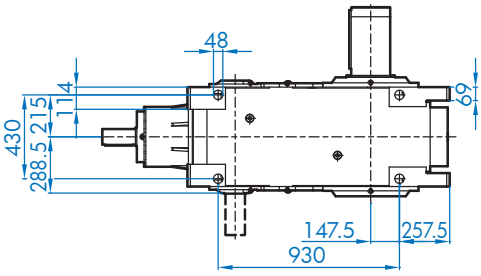

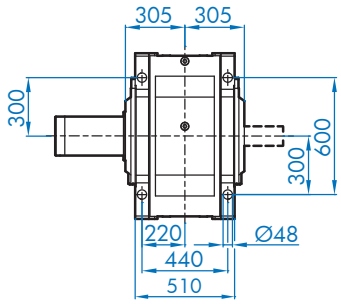

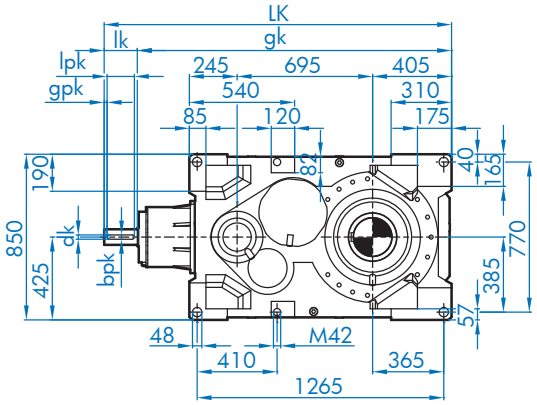

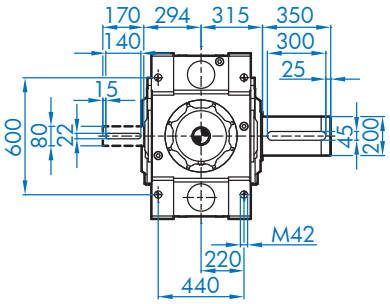

SK 12407 / 12507 A

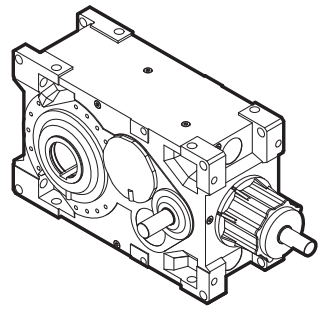

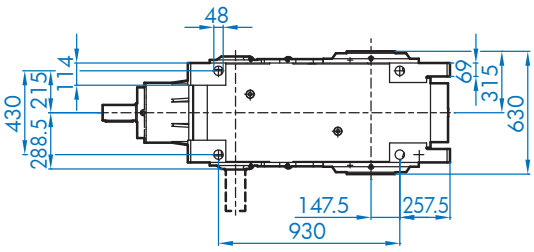

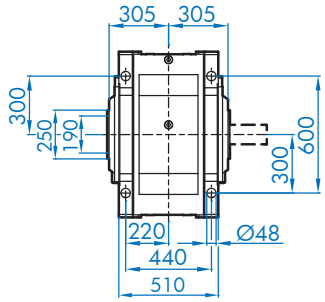

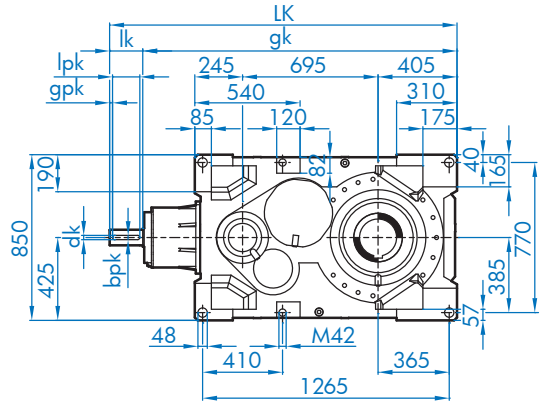

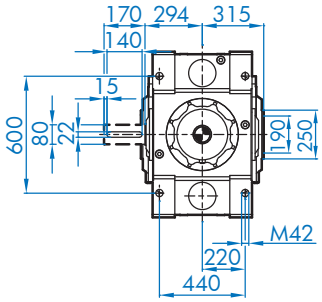

SK 12407 / SK 12507

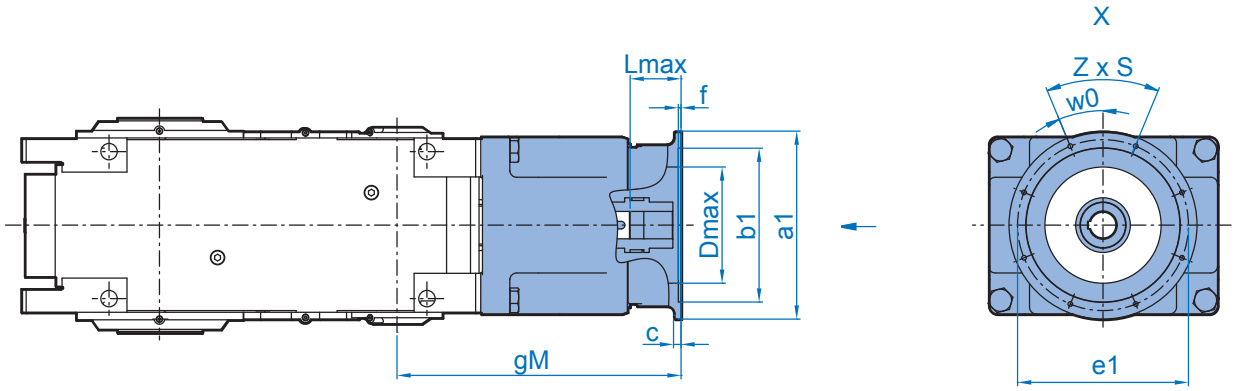

			gM	ø a1	ø b1	ø e1	c	f	z x s	w0°	ø Dmax	Lmax
SK 12407	IEC [1]	160	801	350	250	300	15	6,5	4 x 17.5	45,0	228	119 / 149
		180	801	350	250	300	15	6,5	4 x 17.5	45,0	228	119 / 149
		200	801	400	300	350	17	6,5	4 x 17.5	45,0	276	119 / 149
		225	831	450	350	400	18	6,5	8 x 17.5	22,5	290	149 / 179
		250	831	550	450	500	22	8,0	8 x M16	22,5	340	149 / 179
		280	831	550	450	500	22	8,0	8 x M16	22,5	340	149 / 179
		315	861	660	550	600	22	8,0	8 x 22	22,5	340	179 / 209
	TN [2]	315T	861	800	680	740	25	8,0	8 x 22	22,5	340	179 / 209
		355T	861	900	780	840	25	8,0	8 x 22	22,5	340	179 / 209
SK 12507	IEC [1]	160	650	350	250	300	15	6,5	4 x 17.5	45,0	228	116
		180	650	350	250	300	15	6,5	4 x 17.5	45,0	228	116
		200	650	400	300	350	17	6,5	4 x 17.5	45,0	276	116
		225	680	450	350	400	18	6,5	8 x 17.5	22,5	290	146
		250	680	550	450	500	22	8,0	8 x M16	22,5	340	146
		280	680	550	450	500	22	8,0	8 x M16	22,5	340	146
		315	710	660	550	600	22	8,0	8 x 22	22,5	340	176
	TN [2]	315T	710	800	680	740	25	8,0	8 x 22	22,5	340	176
		355T	710	900	780	840	25	8,0	8 x 22	22,5	340	176

[1] Type designation and dimensions up to 200kW correspond to NORD motors [2] Data for Transnorm motors available on request

			gM	ø a1	ø b1	ø e1	c	f	z x s	w0°	ø Dmax	Lmax
SK 12407	NEMA	254/256 TC	824	350	215,9	184,15	38	4	4 x 1/2-13	45	220	142 / 172
		284/286 TC	824	350	266,7	228,6	38	4	4 x 1/2-13	45	220	172 / 172
		324/326 TC	835	400	317,5	279,4	51	4	4 x 5/8-11	45	265	153 / 183
		364/365 TC	865	450	317,5	279,4	52	4	4 x 5/8-11	45	280	183 / 213
		404/405 TC	879	550	317,5	279,4	70	6	4 x 5/8-11	45	330	197 / 227
		444/445 TC	911	550	406,4	355,6	102	6	4 x 5/8-11	45	330	229 / 259
		447/449 TC	906	660	406,4	355,6	67	6	4 x 5/8-11	45	330	224 / 254
SK 12507	NEMA	254/256 TC	673	350	215,9	184,15	38	4	4 x 1/2-13	45	220	139
		284/286 TC	673	350	266,7	228,6	38	4	4 x 1/2-13	45	220	139
		324/326 TC	684	400	317,5	279,4	51	4	4 x 5/8-11	45	265	150
		364/365 TC	714	450	317,5	279,4	52	4	4 x 5/8-11	45	280	180
		404/405 TC	728	550	317,5	279,4	70	6	4 x 5/8-11	45	330	194
		444/445 TC	760	550	406,4	355,6	102	6	4 x 5/8-11	45	330	226
		447/449 TC	755	660	406,4	355,6	67	6	4 x 5/8-11	45	330	221

SK 13407 / 13507 V

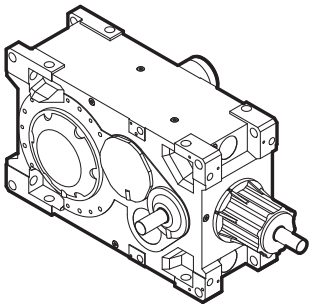

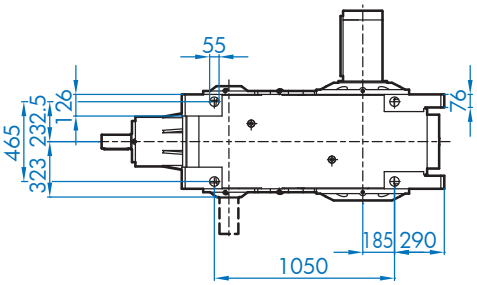

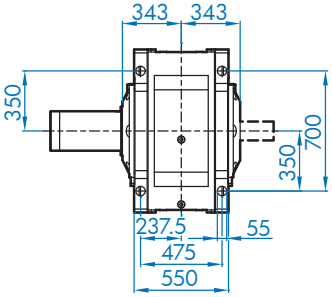

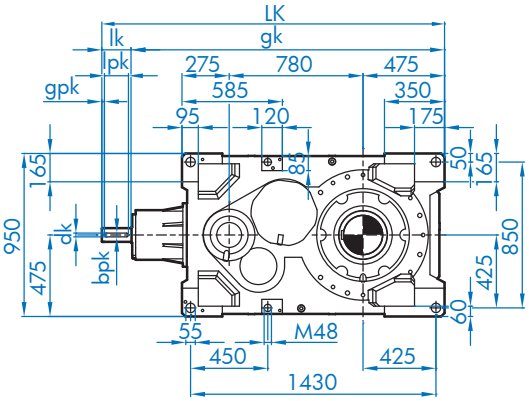

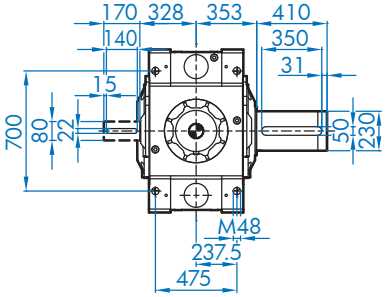

SK 13407 / 13507 A

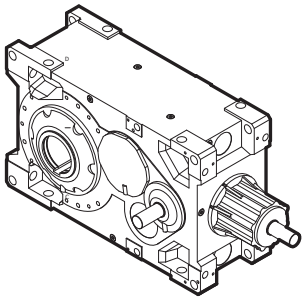

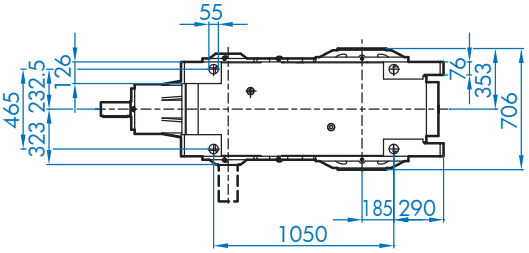

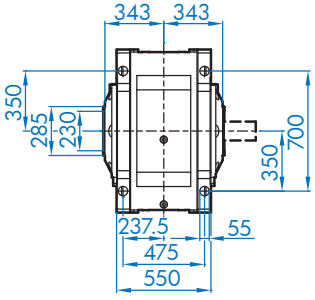

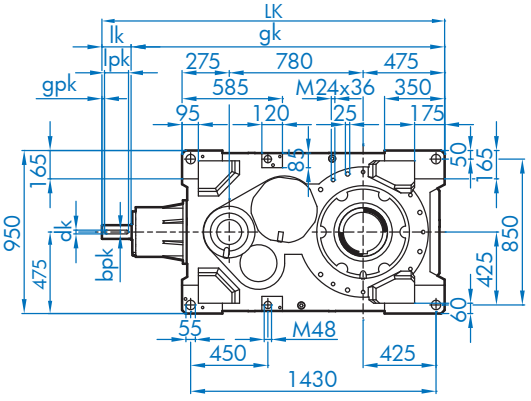

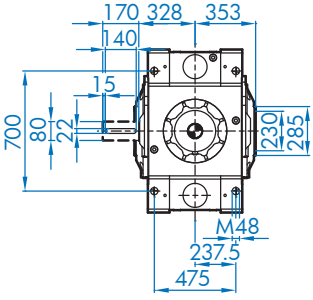

SK 13407 / SK 13507

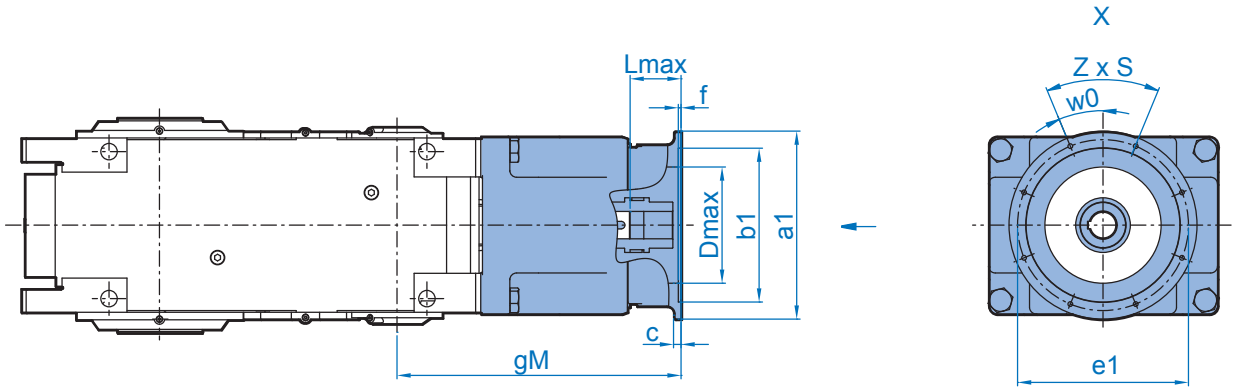

			gM	ø a1	ø b1	ø e1	c	f	z x s	w0°°	ø Dmax	Lmax
SK 13407	IEC [1]	160	862	350	250	300	15	6,5	4 x 17,5	45,0	228	120 / 150
		180	862	350	250	300	15	6,5	4 x 17,5	45,0	228	120 / 150
		200	862	400	300	350	17	6,5	4 x 17,5	45,0	276	120 / 150
		225	892	450	350	400	18	6,5	8 x 17,5	22,5	290	150 / 180
		250	892	550	450	500	22	8,0	8 x M16	22,5	340	150 / 180
		280	892	550	450	500	22	8,0	8 x M16	22,5	340	150 / 180
		315	922	660	550	600	22	8,0	8 x 22	22,5	340	180 / 210
	TN [2]	315T	922	800	680	740	25	8,0	8 x 22	22,5	340	180 / 210
		355T	922	900	780	840	25	8,0	8 x 22	22,5	340	180 / 210
SK 13507	IEC [1]	160	771	350	250	300	15	6,5	4 x 17,5	45,0	228	119
		180	771	350	250	300	15	6,5	4 x 17,5	45,0	228	119
		200	771	400	300	350	17	6,5	4 x 17,5	45,0	276	119
		225	801	450	350	400	18	6,5	8 x 17,5	22,5	290	149
		250	801	550	450	500	22	8,0	8 x M16	22,5	340	149
		280	801	550	450	500	22	8,0	8 x M16	22,5	340	149
		315	831	660	550	600	22	8,0	8 x 22	22,5	340	179
	TN [2]	315T	831	800	680	740	25	8,0	8 x 22	22,5	340	179
		355T	831	900	780	840	25	8,0	8 x 22	22,5	340	179

[1] Type designation and dimensions up to 200kW correspond to NORD motors [2] Data for Transnorm motors available on request

			gM	ø a1	ø b1	ø e1	c	f	z x s	w0°°	ø Dmax	Lmax
SK 13407	NEMA	254/256 TC	885	350	215,9	184,15	38	4	4 x 1/2-13	45	220	143 / 173
		284/286 TC	885	350	266,7	228,6	38	4	4 x 1/2-13	45	220	143 / 173
		324/326 TC	896	400	317,5	279,4	51	4	4 x 5/8-11	45	265	154 / 184
		364/365 TC	926	450	317,5	279,4	52	4	4 x 5/8-11	45	280	184 / 214
		404/405 TC	940	550	317,5	279,4	70	6	4 x 5/8-11	45	330	198 / 228
		444/445 TC	972	550	406,4	355,6	102	6	4 x 5/8-11	45	330	230 / 260
		447/449 TC	967	660	406,4	355,6	67	6	4 x 5/8-11	45	330	225 / 255
SK 13507	NEMA	254/256 TC	794	350	215,9	184,15	38	4	4 x 1/2-13	45	220	142
		284/286 TC	794	350	266,7	228,6	38	4	4 x 1/2-13	45	220	142
		324/326 TC	805	400	317,5	279,4	51	4	4 x 5/8-11	45	265	153
		364/365 TC	835	450	317,5	279,4	52	4	4 x 5/8-11	45	280	183
		404/405 TC	849	550	317,5	279,4	70	6	4 x 5/8-11	45	330	197
		444/445 TC	881	550	406,4	355,6	102	6	4 x 5/8-11	45	330	229
		447/449 TC	876	660	406,4	355,6	67	6	4 x 5/8-11	45	330	224

SK 14407 / 14507 V

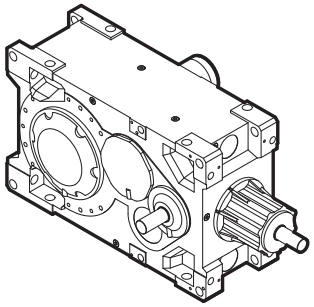

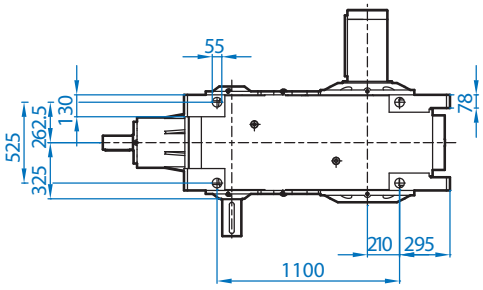

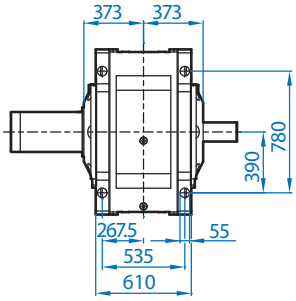

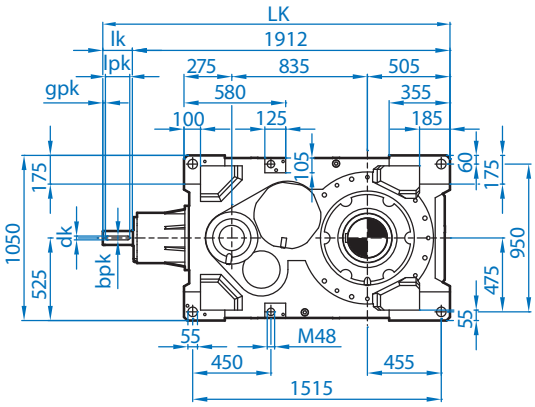

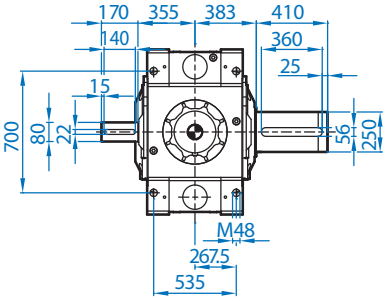

SK 14407 / 14507 A

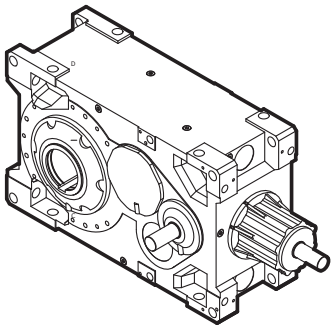

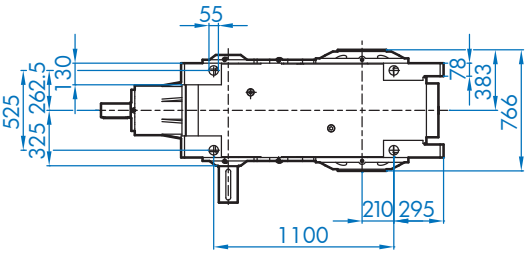

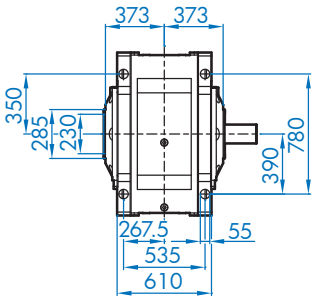

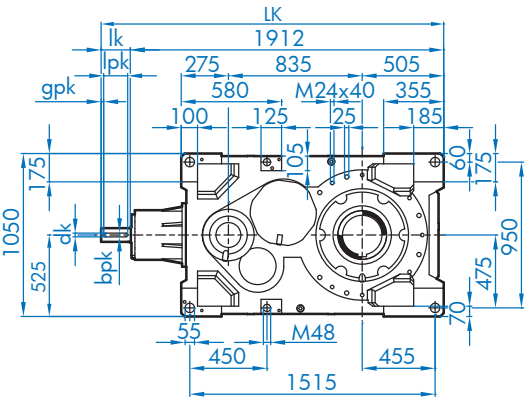

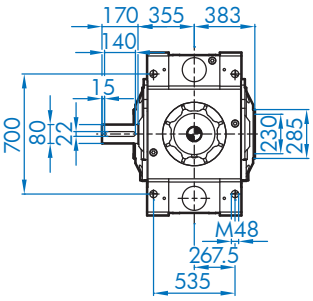

SK 14407 / SK 14507

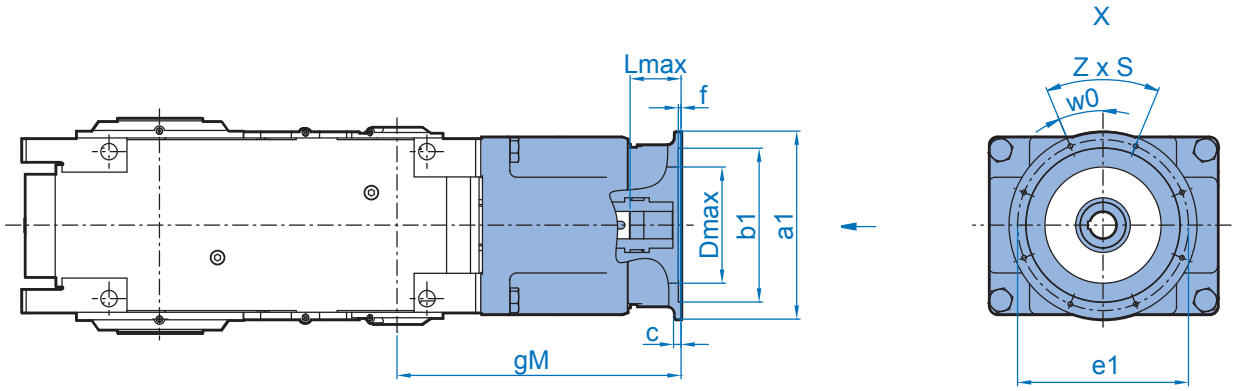

			gM	ø a1	ø b1	ø e1	c	f	z x s	w0°	ø Dmax	Lmax
SK 14407	IEC [1]	160	862	350	250	300	15	6,5	4 x 17,5	45,0	228	120 / 150
		180	862	350	250	300	15	6,5	4 x 17,5	45,0	228	120 / 150
		200	862	400	300	350	17	6,5	4 x 17,5	45,0	276	120 / 150
		225	892	450	350	400	18	6,5	8 x 17,5	22,5	290	150 / 180
		250	892	550	450	500	22	8,0	8 x M16	22,5	340	150 / 180
		280	892	550	450	500	22	8,0	8 x M16	22,5	340	150 / 180
		315	922	660	550	600	22	8,0	8 x 22	22,5	340	180 / 210
	TN [2]	315	922	800	680	740	25	8,0	8 x 22	22,5	340	180 / 210
		355	922	900	780	840	25	8,0	8 x 22	22,5	340	180 / 210
SK 14507	IEC [1]	160	862	350	250	300	15	6,5	4 x 17,5	45,0	228	150
		180	862	350	250	300	15	6,5	4 x 17,5	45,0	228	150
		200	862	400	300	350	17	6,5	4 x 17,5	45,0	276	150
		225	892	450	350	400	18	6,5	8 x 17,5	22,5	290	180
		250	892	550	450	500	22	8,0	8 x M16	22,5	340	180
		280	892	550	450	500	22	8,0	8 x M16	22,5	340	180
		315	922	660	550	600	22	8,0	8 x 22	22,5	340	210
	TN [2]	315	922	800	680	740	25	8,0	8 x 22	22,5	340	210
		355	922	900	780	840	25	8,0	8 x 22	22,5	340	210

[1] Type designation and dimensions up to 200kW correspond to NORD motors [2] Data for Transnorm motors available on request

			gM	ø a1	ø b1	ø e1	c	f	z x s	w0°	ø Dmax	Lmax
SK 14407	NEMA	254/256 TC	885	350	215,9	184,15	38	4	4 x 1/2-13	45	220	143 / 173
		284/286 TC	885	350	266,7	228,6	38	4	4 x 1/2-13	45	220	143 / 173
		324/326 TC	896	400	317,5	279,4	51	4	4 x 5/8-11	45	265	154 / 184
		364/365 TC	926	450	317,5	279,4	52	4	4 x 5/8-11	45	280	184 / 214
		404/405 TC	940	550	317,5	279,4	70	6	4 x 5/8-11	45	330	198 / 228
		444/445 TC	972	550	406,4	355,6	102	6	4 x 5/8-11	45	330	230 / 260
		447/449 TC	967	660	406,4	355,6	67	6	4 x 5/8-11	45	330	225 / 255
SK 14507	NEMA	254/256 TC	794	350	215,9	184,15	38	4	4 x 1/2-13	45	220	142
		284/286 TC	794	350	266,7	228,6	38	4	4 x 1/2-13	45	220	142
		324/326 TC	805	400	317,5	279,4	51	4	4 x 5/8-11	45	265	153
		364/365 TC	835	450	317,5	279,4	52	4	4 x 5/8-11	45	280	183
		404/405 TC	849	550	317,5	279,4	70	6	4 x 5/8-11	45	330	197
		444/445 TC	881	550	406,4	355,6	102	6	4 x 5/8-11	45	330	229
		447/449 TC	876	660	406,4	355,6	67	6	4 x 5/8-11	45	330	224

SK 15407 / 15507 V

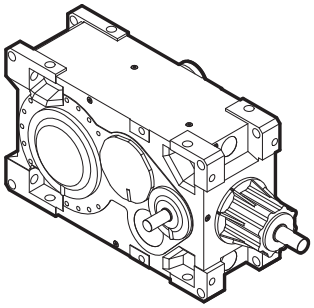

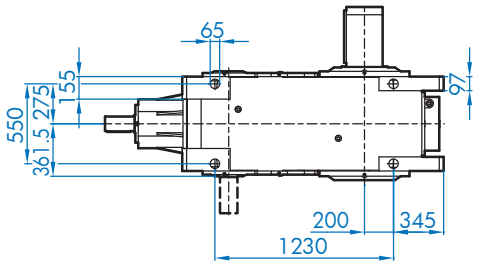

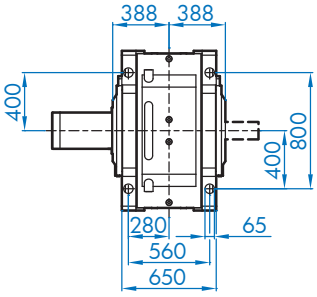

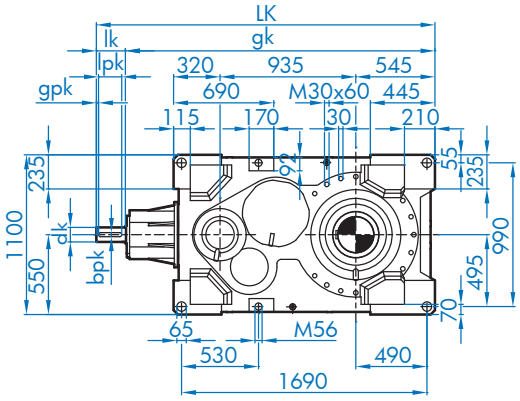

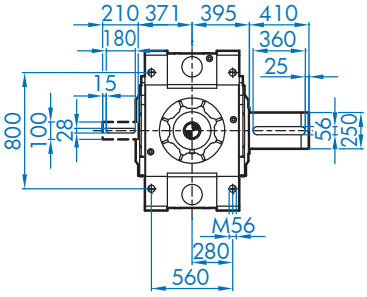

SK 15407 / 15507 A

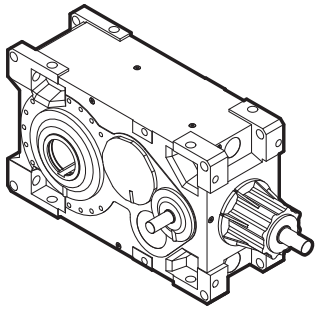

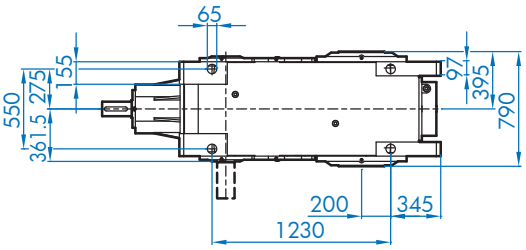

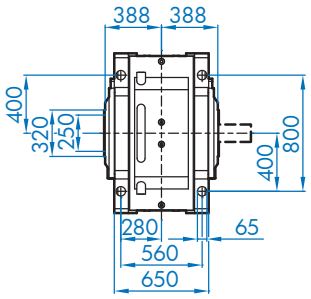

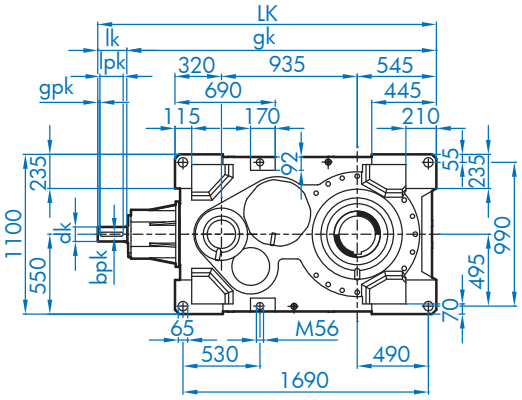

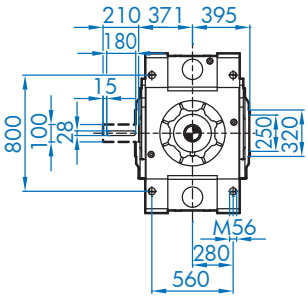

SK 15407 / SK 15507

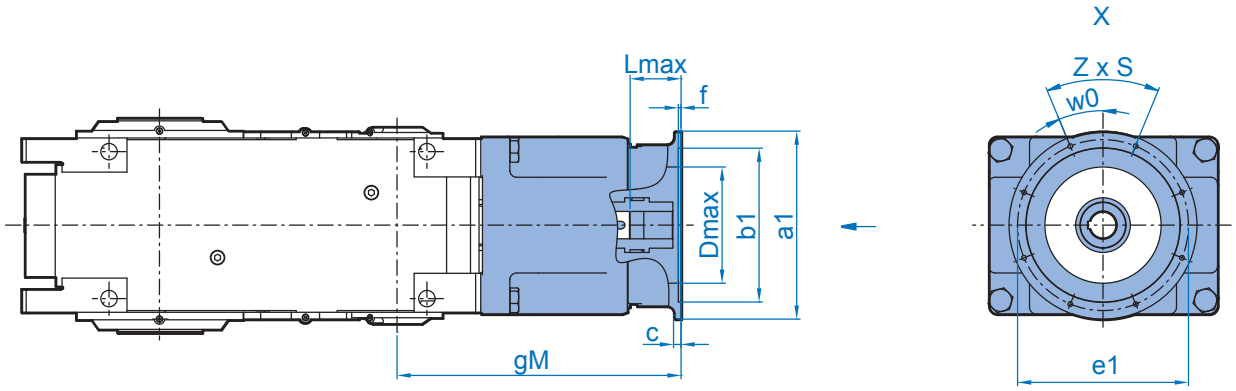

			gM	ø a1	ø b1	ø e1	c	f	z x s	w0°	ø Dmax	Lmax
SK 15407	IEC [1]	160	972	350	250	300	15	6,5	4 x 17,5	45,0	228	120 / 150
		180	972	350	250	300	15	6,5	4 x 17,5	45,0	228	120 / 150
		200	972	400	300	350	17	6,5	4 x 17,5	45,0	276	120 / 150
		225	1002	450	350	400	18	6,5	8 x 17,5	22,5	290	150 / 180
		250	1002	550	450	500	22	8,0	8 x M16	22,5	340	150 / 180
		280	1002	550	450	500	22	8,0	8 x M16	22,5	340	150 / 180
		315	1032	660	550	600	22	8,0	8 x 22	22,5	340	180 / 210
	TN [2]	315T	1032	800	680	740	25	8,0	8 x 22	22,5	340	180 / 210
		355T	1032	900	780	840	25	8,0	8 x 22	22,5	340	180 / 210
SK 15507	IEC [1]	160	832	350	250	300	15	6,5	4 x 17,5	45,0	228	120
		180	832	350	250	300	15	6,5	4 x 17,5	45,0	228	120
		200	832	400	300	350	17	6,5	4 x 17,5	45,0	276	120
		225	862	450	350	400	18	6,5	8 x 17,5	22,5	290	150
		250	862	550	450	500	22	8,0	8 x M16	22,5	340	150
		280	862	550	450	500	22	8,0	8 x M16	22,5	340	150
		315	892	660	550	600	22	8,0	8 x 22	22,5	340	180
	TN [2]	315T	892	800	680	740	25	8,0	8 x 22	22,5	340	180
		355T	892	900	780	840	25	8,0	8 x 22	22,5	340	180

[1] Type designation and dimensions up to 200kW correspond to NORD motors [2] Data for Transnorm motors available on request

			gM	ø a1	ø b1	ø e1	c	f	z x s	w0°	ø Dmax	Lmax
SK 15407	NEMA	254/256 TC	995	350	215,9	184,15	38	4	4 x 1/2-13	45	220	143 / 173
		284/286 TC	995	350	266,7	228,6	38	4	4 x 1/2-13	45	220	143 / 173
		324/326 TC	1006	400	317,5	279,4	51	4	4 x 5/8-11	45	265	154 / 184
		364/365 TC	1036	450	317,5	279,4	52	4	4 x 5/8-11	45	280	184 / 214
		404/405 TC	1050	550	317,5	279,4	70	6	4 x 5/8-11	45	330	198 / 228
		444/445 TC	1082	550	406,4	355,6	102	6	4 x 5/8-11	45	330	230 / 260
		447/449 TC	1077	660	406,4	355,6	67	6	4 x 5/8-11	45	330	225 / 255
SK 15507	NEMA	254/256 TC	855	350	215,9	184,15	38	4	4 x 1/2-13	45	220	143
		284/286 TC	855	350	266,7	228,6	38	4	4 x 1/2-13	45	220	143
		324/326 TC	866	400	317,5	279,4	51	4	4 x 5/8-11	45	265	154
		364/365 TC	896	450	317,5	279,4	52	4	4 x 5/8-11	45	280	184
		404/405 TC	910	550	317,5	279,4	70	6	4 x 5/8-11	45	330	198
		444/445 TC	942	550	406,4	355,6	102	6	4 x 5/8-11	45	330	230
		447/449 TC	937	660	406,4	355,6	67	6	4 x 5/8-11	45	330	225

A - Keyed Hollow Shaft
AVL2 / 3 / 4 - Agitator & Drywell Hollow Shaft

A - Keyed Hollow Shaft & Customer Shaft Detail

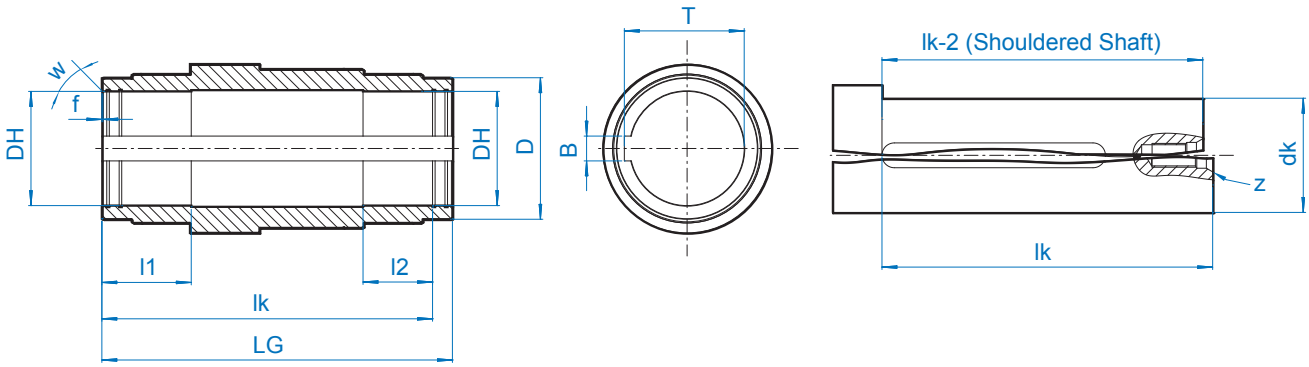

	ø DH H7	LG	ø dk h6	lk	lk-2	l1	l2	ø D	f	w	B	T	z
SK 5.07	105	385	105	355	353	100	70	140	3	15	28	111,4	M24
SK 6.07	105	385	105	355	353	100	70	140	3	15	28	111,4	M24
SK 7.07	125	394	125	359	357	100	65	160	2	30	32	132,4	M24
SK 8.07	125	394	125	359	357	100	65	160	2	30	32	132,4	M24
SK 9.07 *	160 (145)	506	160	486	484	130	110	220	2	30	40	169,4	M36
SK 10.07*	160 (145)	506	160	486	484	130	110	220	2	30	40	169,4	M36
SK 11.07	170	560	170	525	523	140	105	240	2	30	40	179,4	M36
SK 12.07	190	630	190	595	593	160	125	250	2	30	45	200,4	M36
SK 13.07	230	706	230	666	664	180	140	285	2	30	50	241,4	M48
SK 14.07	230	766	230	726	724	180	140	285	2	30	50	241,4	M48
SK 15.07	250	790	250	745	743	200	155	320	2	30	56	262,4	M48

* to Option DRY max. ø145

AVL2/3/4 - Agitator & Drywell - Hollow Shaft

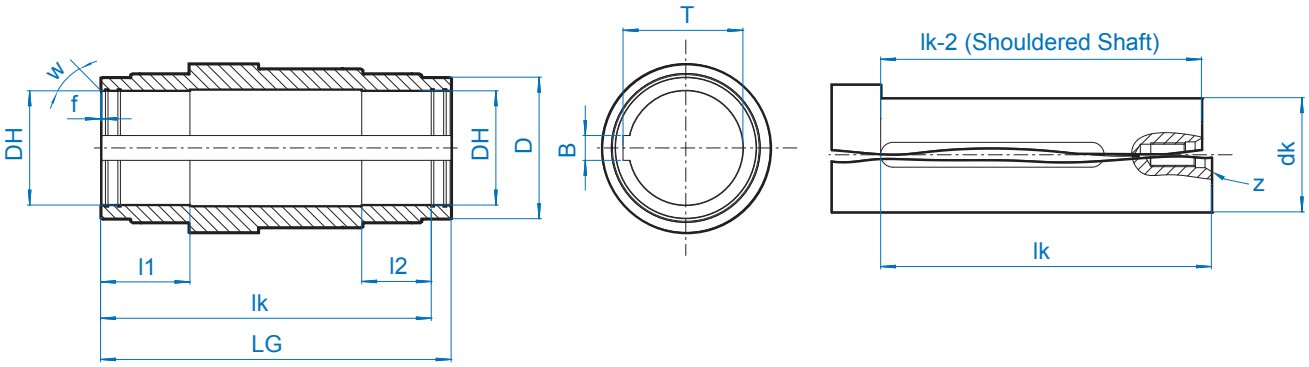

	ø DH H7	LG	ø dk h6	lk	lk-2	l1	l2	ø D	f	w	B	T	z
SK 5.07	105	594	105	564	562	100	70	140	3	15	28	111,4	M24
SK 6.07	105	594	105	564	562	100	70	140	3	15	28	111,4	M24
SK 7.07	125	682	125	647	645	100	80	160	2	30	32	132,4	M24
SK 8.07	125	682	125	647	645	100	80	160	2	30	32	132,4	M24
SK 9.07	130	770,5	160	745,5	743,5	110	80	220	2	30	40	169,4	M36
SK 10.07	130	770,5	160	745,5	743,5	110	80	220	2	30	40	169,4	M36
SK 11.07	170	730	170	695	693	140	105	240	2	30	40	179,4	M36
SK 12.07	190	800	190	765	763	160	125	250	2	30	45	200,4	M36
SK 13.07	230	896	230	856	854	180	140	285	2	30	50	241,4	M48
SK 14.07	230	956	230	916	914	180	140	285	2	30	50	241,4	M48
SK 15.07	250	1040	250	995	993	200	155	320	2	30	56	262,4	M48

For Tolerance Info see ⇨ 56

AS - Shrink Disc with Hollow Shaft
ASVL2/3 - Agitator & Drywell Hollow Shaft with Shrink Disc

AS - Shrink Disc Hollow Shaft

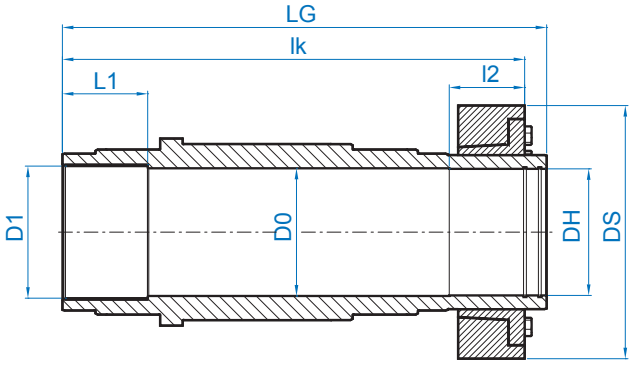

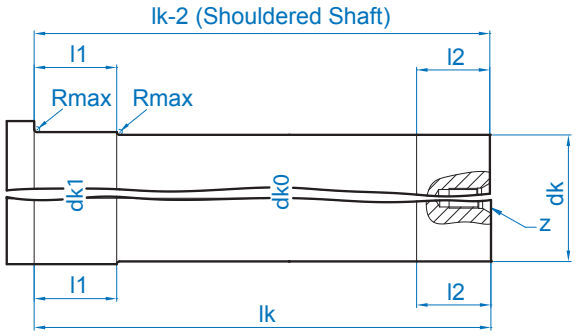

	ø DH H7	ø D0	ø D1	L1	ø DS	LG	ø dk1 h8	ø dk0	ø dk	lk	lk-2	l1	l2	Rmax	z
SK 5.07	110	110,5	110	85	230	458	110	110	110 h6	448	446	80	65	3	M24
SK 6.07	110	110,5	110	85	230	458	110	110	110 h6	448	446	80	65	3	M24
SK 7.07	125	125,5	125	90	290	484	125	125	125 h6	465	463	100	65	3	M24
SK 8.07	125	125,5	125	90	290	484	125	125	125 h6	465	463	100	65	3	M24
SK 9.07 *	160 (145)	160,5	160	110	320	628	160	160	160 h6	596	594	110	85	3	M36
SK 10.07*	160 (145)	160,5	160	110	320	628	160	160	160 h6	596	594	110	85	3	M36
SK 11.07	170	172	180	125	370	690	180	170	170 g6	658	656	125	105	5	M36
SK 12.07	190	192	200	135	405	770	200	190	190 g6	736	734	130	120	5	M36
SK 13.07	230	232	240	155	460	880	240	230	230 g6	838	836	150	135	5	M48
SK 14.07	230	232	240	155	460	940	240	230	230 g6	898	896	150	135	5	M48
SK 15.07	250	252	260	175	485	970	260	250	250 g6	928	926	175	150	5	M48

* to Option DRY max. ø145

ASVL2/3/4 - Agitator & Drywell - Hollow Shaft with Shrink Disc

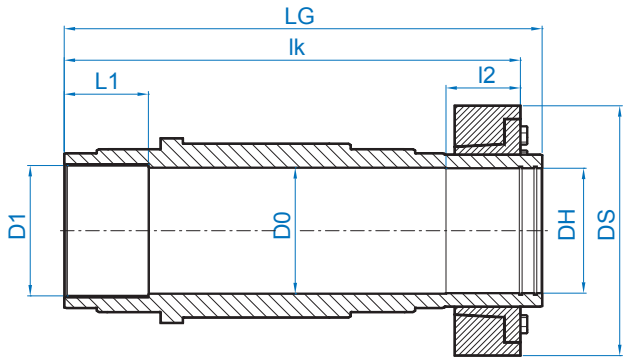

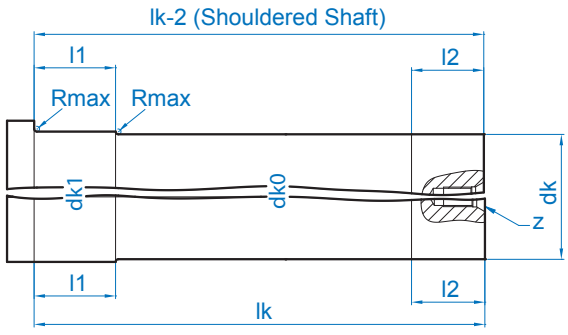

	ø DH H7	ø D0	ø D1	L1	ø DS	LG	ø dk1 h8	ø dk0	ø dk	lk	lk2	l1	l2	Rmax	z
SK 5.07	110	110,5	110	85	230	667	110	110	110 h6	657	655	80	65	3	M24
SK 6.07	110	110,5	110	85	230	667	110	110	110 h6	657	655	80	65	3	M24
SK 7.07	125	125,5	125	90	300	767	125	125	125 h6	713	711	100	65	3	M24
SK 8.07	125	125,5	125	90	300	767	125	125	125 h6	713	711	100	65	3	M24
SK 9.07	130	160,5	160	110	320	889,5	160	160	160 h6	854,5	852,5	110	82	3	M36
SK 10.07	130	160,5	160	110	320	889,5	160	160	160 h6	854,5	852,5	110	82	3	M36
SK 11.07	170	172	180	125	370	860	180	170	170 g6	828	826	125	105	5	M36
SK 12.07	190	192	200	135	405	940	200	190	190 g6	906	904	130	120	5	M36
SK 13.07	230	232	240	155	460	1070	240	230	230 g6	1028	1026	155	135	5	M48
SK 14.07	230	232	240	155	460	1130	240	230	230 g6	1088	1086	155	135	5	M48
SK 15.07	250	252	260	175	485	1220	260	250	250 g6	1178	1176	170	150	5	M48

For Tolerance info see ⇨ 56

EV - Splined Solid Shaft

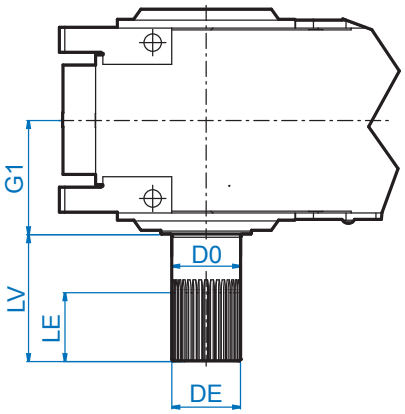

	DE	LE	G1	LV	ø D0
SK 5.07	W 100 x 5 x 30 x 18 - DIN 5480	85	192,5	210	100
SK 6.07	W 100 x 5 x 30 x 18 - DIN 5480	85	192,5	210	100
SK 7.07	W 130 x 5 x 30 x 24 - DIN 5480	85	197	250	130
SK 8.07	W 130 x 5 x 30 x 24 - DIN 5480	85	197	250	130
SK 9.07	W 140 x 3 x 30 x 45 - DIN 5480	100	253	300	140
SK 10.07	W 140 x 3 x 30 x 45 - DIN 5480	100	253	300	140
SK 11.07	W 170 x 5 x 30 x 32 - DIN 5480	160	280	300	170
SK 12.07	W 190 x 5 x 30 x 36 - DIN 5480	190	315	350	190
SK 13.07	W 220 x 5 x 30 x 42 - DIN 5480	215	353	410	220
SK 14.07	W 220 x 5 x 30 x 42 - DIN 5480	215	353	410	220
SK 15.07	W 250 x 5 x 30 x 48 - DIN 5480	245	395	410	250

EA - Splined Hollow Shaft

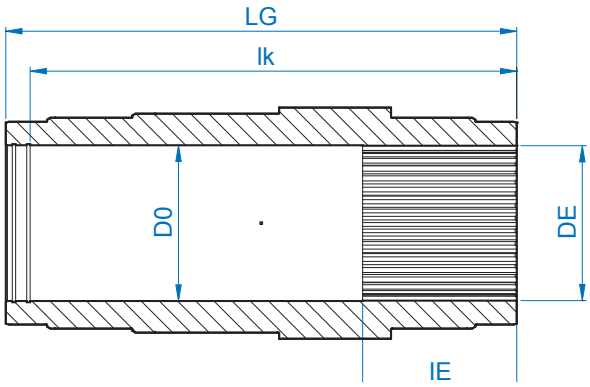

	DE	LE	LG	ø D0	lk
SK 5.07	N 100 x 5 x 30 x 18 - DIN 5480	85	385	100	355
SK 6.07	N 100 x 5 x 30 x 18 - DIN 5480	85	385	100	355
SK 7.07	N 130 x 5 x 30 x 24 - DIN 5480	85	394	130	374
SK 8.07	N 130 x 5 x 30 x 24 - DIN 5480	85	394	130	374
SK 9.07 *	N 140 x 3 x 30 x 45 - DIN 5480	100	506	140	476
SK 10.07*	N 140 x 3 x 30 x 45 - DIN 5480	100	506	140	476
SK 11.07	N 170 x 5 x 30 x 32 - DIN 5480	160	560	170	525
SK 12.07	N 190 x 5 x 30 x 36 - DIN 5480	190	630	190	595
SK 13.07	N 220 x 5 x 30 x 42 - DIN 5480	215	706	220	666
SK 14.07	N 220 x 5 x 30 x 42 - DIN 5480	215	706	220	666
SK 15.07	N 250 x 5 x 30 x 48 - DIN 5480	245	790	250	745

* Deviating dimensions with option DRY, please contact NORD DRIVESYSTEMS.



H/H66 - Hollow Shaft Shrink Disc/IP66 Cover B - Fixing Kit

H/H66 - Hollow Shaft/Shrink Disc/ IP66 cover

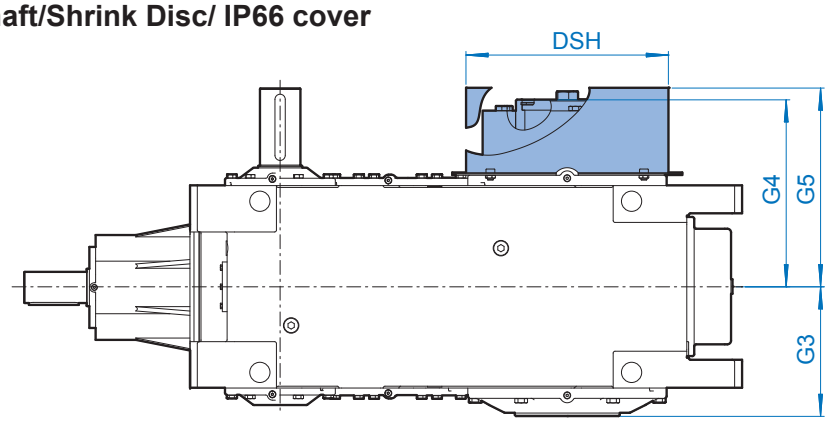

	ø DSH	G3	G4	G5
SK 5.07	258	192,5	255,5	287,5
SK 6.07	258	192,5	255,5	287,5
SK 7.07	319	199	286	308
SK 8.07	319	199	286	308
SK 9.07	453	253	373	393
SK 10.07	453	253	373	393
SK 11.07	460	280	410	440
SK 12.07	500	315	455	480
SK 13.07	550	353	527	555
SK 14.07	550	383	557	585
SK 15.07	630	395	575	605

Other cover sizes available upon request

B - Fixing Kit

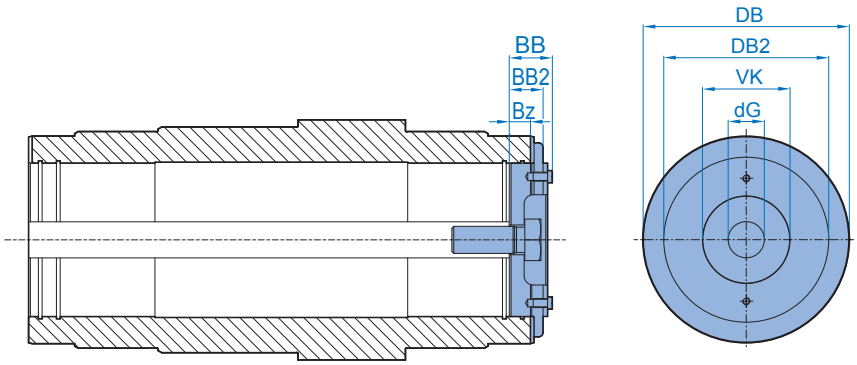

	ø DB	ø DB2	ø VK	BB	BB2	Bz	ø dG
SK 5.07	135	-	62	30,0	30,0	10,0	26 (M24)
SK 6.07	135	-	62	30,0	30,0	10,0	26 (M24)
SK 7.07	155	124,8	49	27,0	22,0	10,0	26 (M24)
SK 8.07	155	124,8	49	27,0	22,0	10,0	26 (M24)
SK 9.07	215	159,8	100	42,5	27,5	15,5	33 (M36)
SK 10.07	215	159,8	100	42,5	27,5	15,5	33 (M36)
SK 11.07	215	169,8	100	42,5	37,5	27,5	33 (M36)
SK 12.07	235	189,8	100	44,5	39,5	29,5	33 (M36)
SK 13.07	275	229,8	100	56,5	51,5	36,5	52 (M48)
SK 14.07	275	229,8	100	56,5	51,5	36,5	52 (M48)
SK 15.07	295	ø 249,8	100	56,5	51,5	36,5	52 (M48)

Other sizes available upon request

For Tolerance Info sSee ⇨ 56

F - Low Output Flange

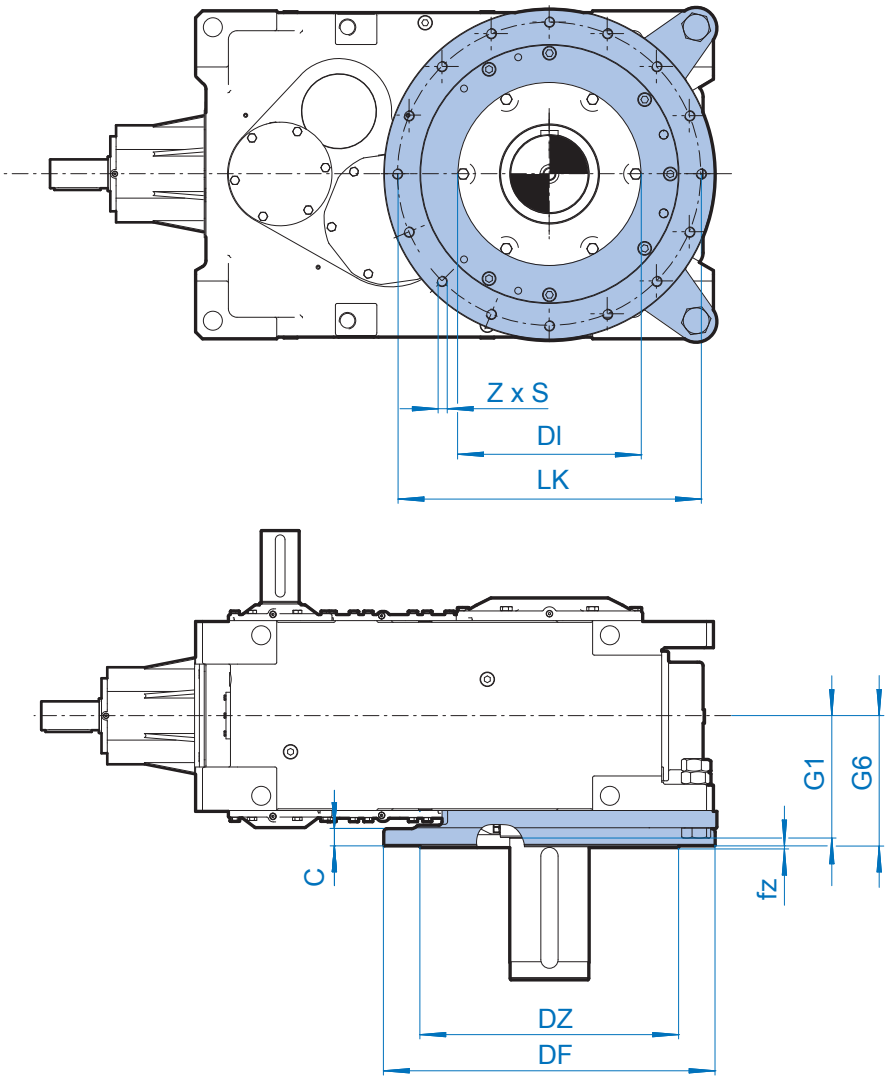

	ø DF	G1	G6	ø LK	ø DZ	ø DI	c	fz	z	s
SK 5.07	950	192,5	234,5	400	350	250	22	5	8	M16
SK 6.07	950	192,5	234,5	400	350	250	22	5	8	M16
SK 7.07	550	197	237	500	450	308	28	5	8	M16
SK 8.07	550	197	237	500	450	308	28	5	8	M16
SK 9.07	660	253	297,5	600	550	434	35	8	8	M24
SK 10.07	660	253	297,5	600	550	434	35	8	8	M24
SK 11.07	730	280	300	680	580	420	40	5	12	M24
SK 12.07	840	315	304	760	650	470	50	5	12	M30
SK 13.07	960	353	375	880	750	530	50	5	16	M30
SK 14.07	960	383	405	880	750	530	50	5	16	M30
SK 15.07	1100	395	435	980	900	600	60	10	16	M36

FK - High Output Flange

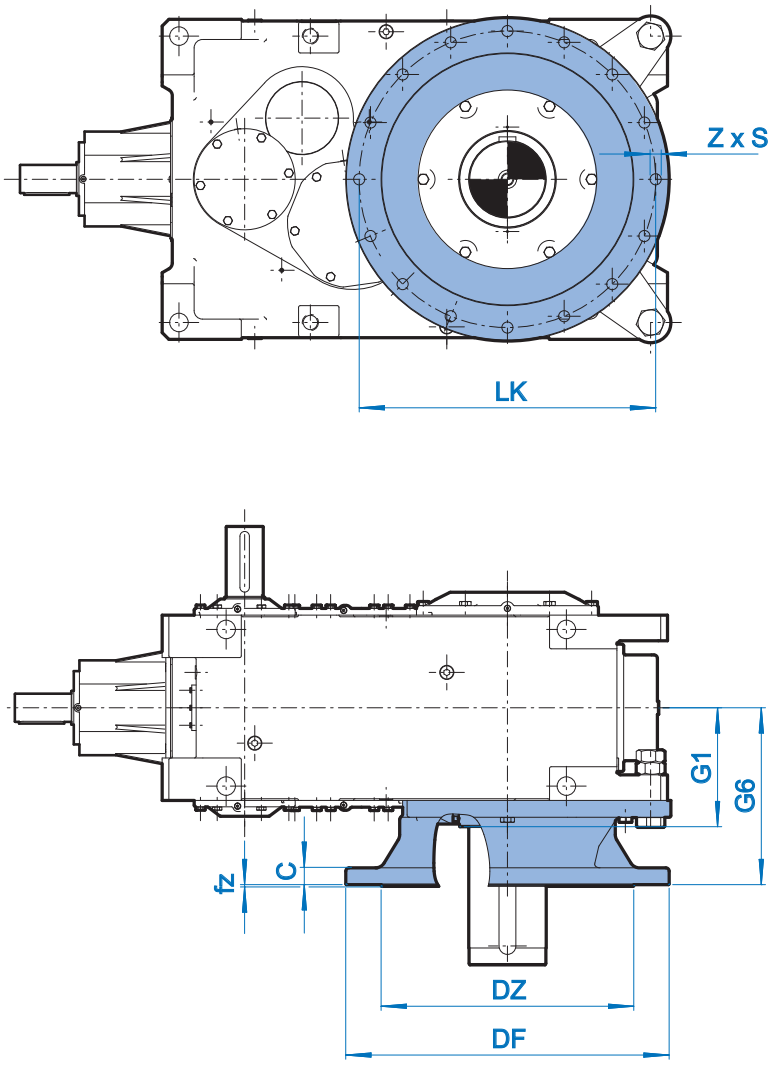

	ø DF	G1	G6	ø LK	DZ	DI	c	fz	z	ø s
SK 5.07	950	192,5	234,5	400	350	250	22	5	8	17,5
SK 6.07	950	192,5	234,5	400	350	259	22	5	8	17,5
SK 7.07	550	197	237	500	450	308	28	5	8	17,5
SK 8.07	550	197	237	500	450	308	28	5	8	17,5
SK 9.07	660	253	297,5	600	550	434	35	8	8	26
SK 10.07	660	253	297,5	600	550	434	35	8	8	26
SK 11.07	730	280	420	680	560	420	40	5	12	26
SK 12.07	840	315	470	760	650	470	50	5	12	33
SK 13.07	960	353	525	880	750	530	50	5	16	33
SK 14.07	---	---	---	---	---	---	---	---	---	---
SK 15.07	---	---	---	---	---	---	---	---	---	---

FVL2/FVL3/FVL4 - Agitator & Drywell Flange

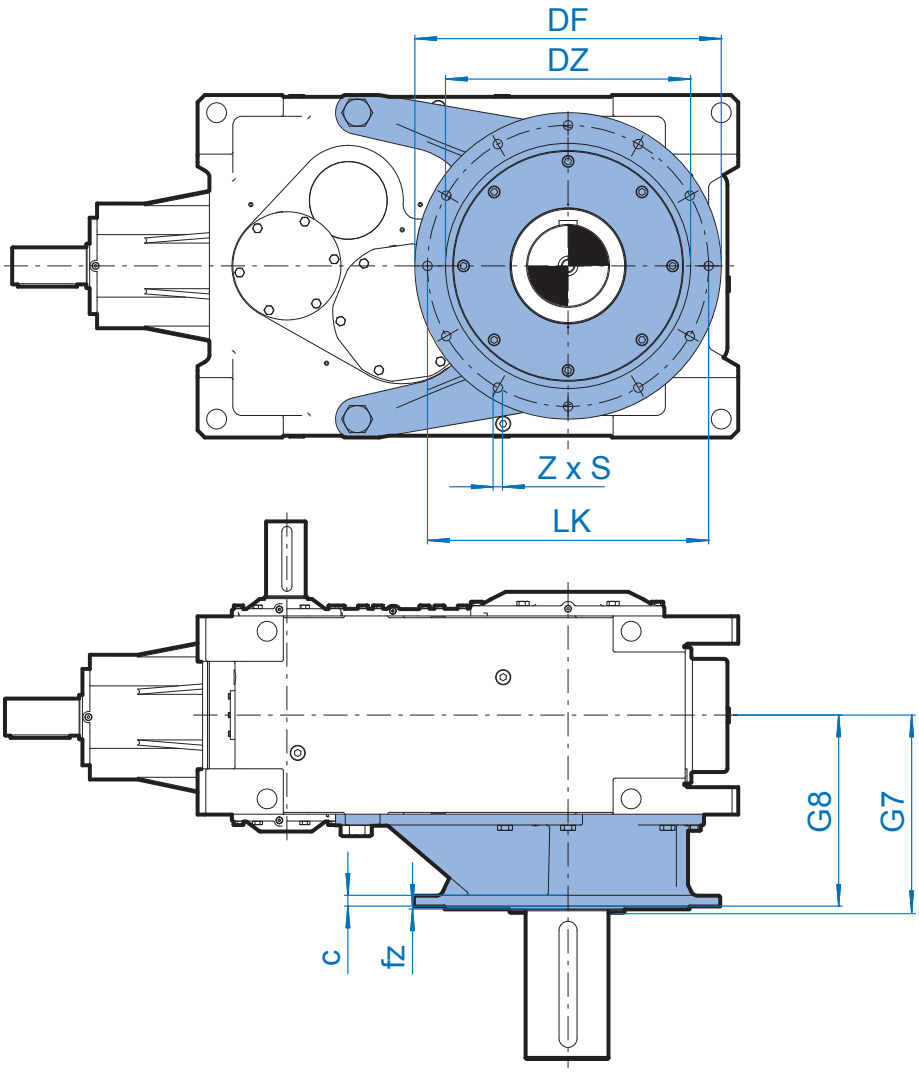

	G7	G8	ø DF	ø DZ	ø LK	fz	c	z	s
SK 5.07	401,5	396,5	550	450	500	5	29,5	8	17,5
SK 6.07	401,5	396,5	550	450	500	5	29,5	8	17,5
SK 7.07	485	477	660	550	600	6	28,5	8	22
SK 8.07	485	477	660	550	600	6	28,5	8	22
SK 9.07	517,5	509,5	660	550	600	8	35	8	26
SK 10.07	517,5	509,5	660	550	600	8	35	8	26
SK 11.07	450	440	675	540	620	5	40	10	22
	465	455	760	600	700	5	50	12	22
SK 12.07	485	470	760	600	700	5	50	12	22
SK 13.07	543	530	850	680	780	5	50	12	26
SK 14.07	575	560	850	680	780	5	50	12	26
SK 15.07	645	630	1000	800	930	8	60	16	33

VL6 - Agitator Without Flange

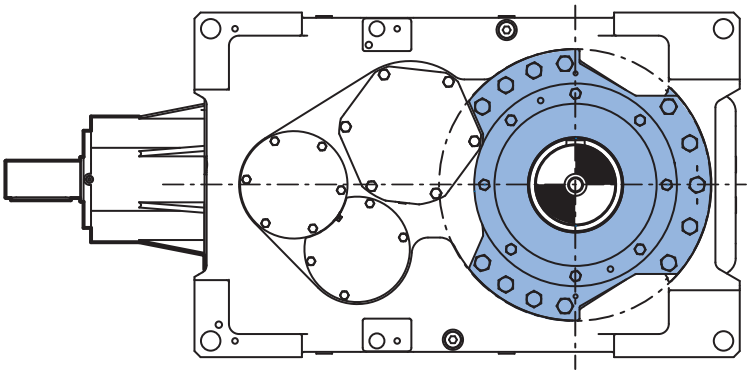

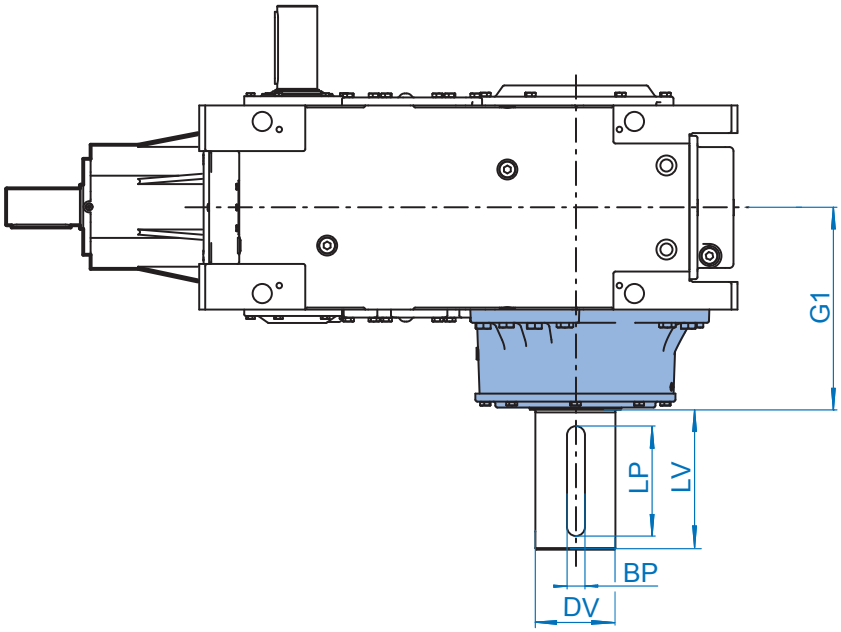

	G1	LV	ø DV	LP	BP
SK 5.07	401,5	210	120	180	32
SK 6.07	401,5	210	120	180	32
SK 7.07	485	250	140	200	36
SK 8.07	485	250	140	200	36
SK 9.07	517,5	300	160	260	40
SK 10.07	517,5	300	160	260	40
SK 11.07	450	300	170	260	40
SK 12.07	505	350	200	300	45
SK 13.07	542	410	230	350	50
SK 14.07	572	410	250	360	56
SK 15.07	645	410	250	360	56

VL5 - Extruder Flange

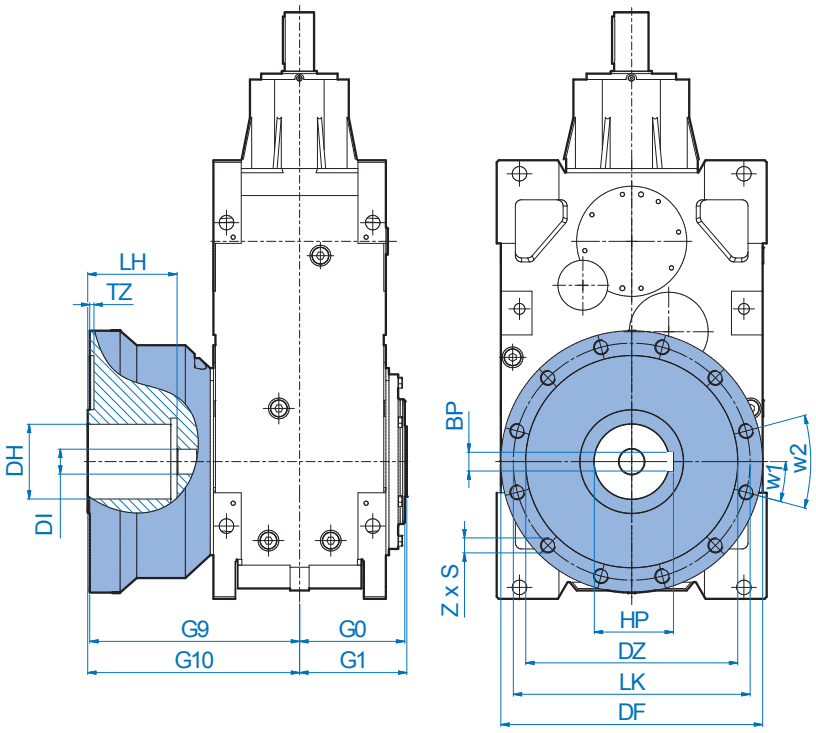

	Bearing type APRL	BP	DF	DH	DI	DZ	G0	G1	G9	G10	HP	LH	LK	Z	S	TZ	w1	w2
SK 5.07 SK 6.07	29 432	28	470	100	60	390	207,5	212,5	408,5	413,5	106,4	170	430	8	M30x50	10	22,5	45
	29 436	32	470	120	60	390	207,5	212,5	408,5	413,5	127,4	170	430	8	M30x50	10	22,5	45
SK 7.07 SK 8.07	29 436	32	560	120	60	460	210	215	450	455	127,4	215	510	12	M36x58	10	15	30
	29 440	32	560	130	60	460	210	215	450	455	137,4	215	510	12	M36x58	10	15	30
	29 444	36	560	150	60	460	210	215	450	455	158,4	215	510	12	M36x58	10	15	30
SK 9..07 SK10..07	29 440	32	560	130	60	460	253	258	482,5	487,5	137,4	215	510	12	M36x58	10	15	30
	29 444	36	560	150	60	460	253	258	482,5	487,5	158,4	215	570	12	M36x58	10	15	30
	29 452	45	630	180	60	510	253	258	505	510	190,4	215	570	12	M36x58	10	15	30
SK11..07	29 452	45	630	180	60	510	268	273	510	515	190,4	215	570	12	M36x58	10	15	30
	29 456	45	680	200	60	550	268	273	528	533	210,4	300	615	12	M36x58	10	15	30

F1 - Input Flange

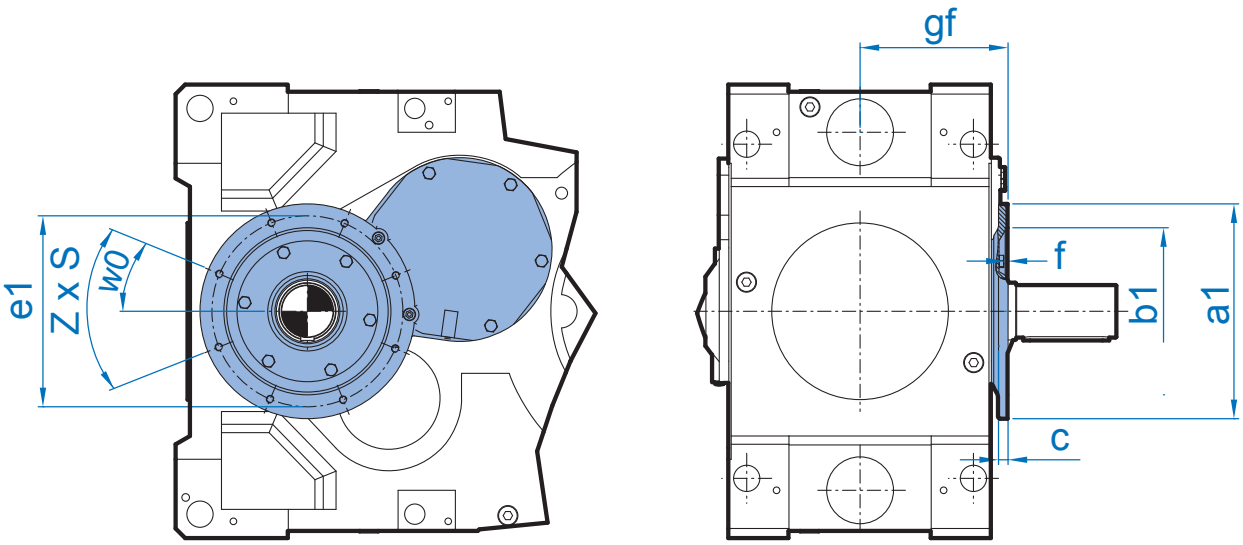

	gf	ø a1	ø b1	ø e1	c	f	w0°	z x s
SK 5.07	200,5	300	230	265	20	6	22,5	8 x M12
SK 6.07	200,5	300	230	265	20	6	22,5	8 x M12
SK 7.07	203,5	350	250	300	20	6	22,5	8 x M16
SK 8.07	203,5	350	250	300	20	6	22,5	8 x M16
SK 9.07	236	350	250	300	20	6	22,5	8 x M16
SK 10.07	236	350	250	300	20	6	22,5	8 x M16
SK 11.07	255	450	350	400	20	6,5	22,5 / 27,5	8 x M16
SK 12.07	290	550	450	500	25	6,5	21,5	8 x M16
SK 13.07	315	550	450	500	25	6,5	23	8 x M16
SK 14.07	345	550	450	500	25	6,5	23	8 x M16
SK 15.07	370	550	450	500	25	6,5	24	8 x M16

R - Backstop

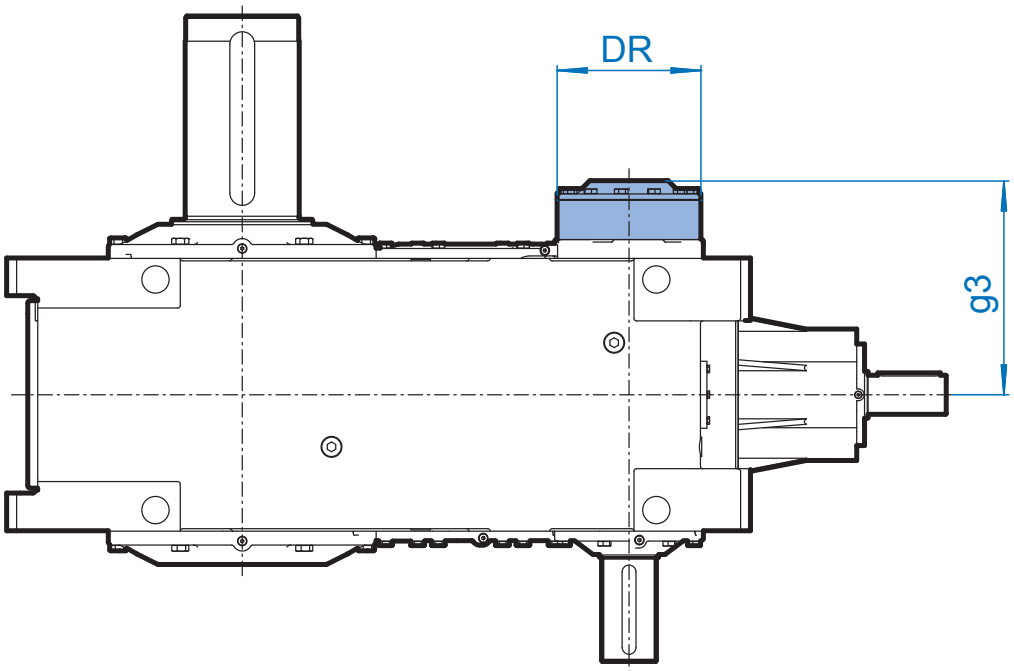

	i_N - Ratio	DR	g3
SK 5407	18,0 - 100	175	283
SK 5507	112,0 - 400	150	265,5
SK 6407	20,0 - 112	175	283
SK 6507	125,0 - 450	150	265,5
SK 7407	18,0 - 100	190	297
SK 7507	112,0 - 400	175	288
SK 8407	20,0 - 112	190	297
SK 8507	125,0 - 450	175	288
SK 9407	18,0 - 100	210	329,5
SK 9507	112,0 - 400	190	326,5
SK 10407	20,0 - 112	210	329,5
SK 10507	125,0 - 450	190	326,5
SK 11407	11,2 - 80	245	360
SK 11507	112,0 - 400	190	340
	80,0 - 100	210	350
SK 12407	112,6 - 71	290	415
SK 12507	80,0 - 400	210	385
SK 13407	12,6 - 71	290	431
SK 13507	80,0 - 400	210	416,5
SK 14407	20,0 - 90	290	465
SK 14507	111,0 - 400	210	445
SK 15407	12,6 - 71	400	510
SK 15507	80,0 - 400	290	485

FAN - Fan

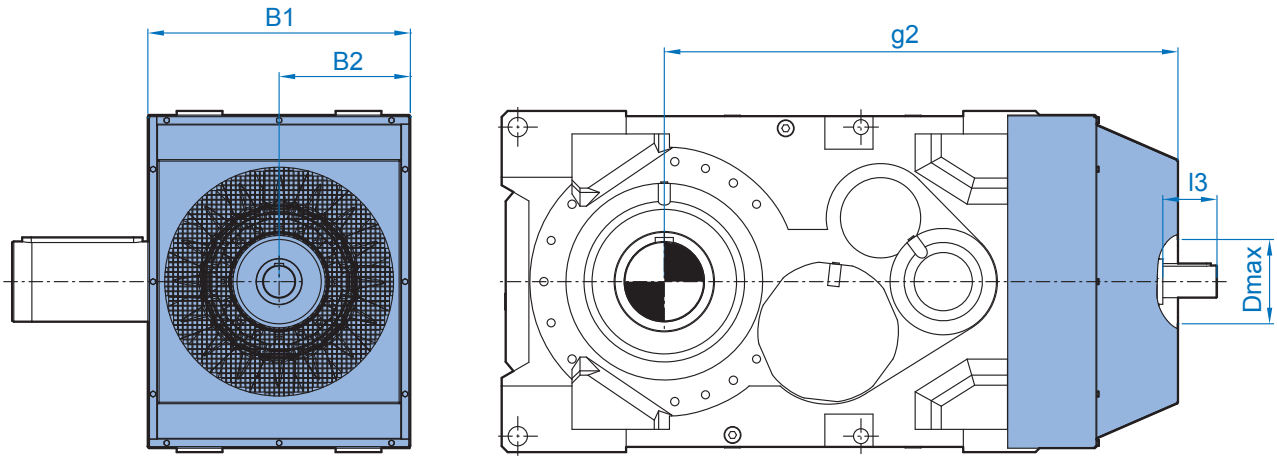

FAN	i_N	B1	B2	g2	l3	ø Dmax
SK 5407	18,0 - 100	427	213,5	714	54	110
SK 5507	112,0 - 400	427	213,5	664	39	110
SK 6407	20,0 - 112	427	213,5	739	54	110
SK 6507	125,0 - 450	427	213,5	689	39	110
SK 7407	18,0 - 50	438	219	848,5	74	170
	56,0 - 100				44	
SK 7507	112,0 - 400	438	219	796,5	24	170
SK 8407	20,0 - 56	438	219	873,5	74	170
	63,0 - 112				44	
SK 8507	125,0 - 450	438	219	821,5	44	170
SK 9407	18,0 - 50	503	251,5	968,5	74	170
	56,0 - 100				64	
SK 9507	112,0 - 400	503	251,5	938,5	44	170
SK 10407	20,0 - 56	503	251,5	998,5	74	170
	63,0 - 112				64	
SK 10507	125,0 - 450	503	251,5	978,5	44	170
SK 11407	12,6 - 45	574	287	1125	100	210
	50,0 - 71				70	
SK 11507	80,0 - 400	574	287	1050	70	210
SK 12407	12,6 - 45	654	327	1280	135	220
	50,0 - 71				105	
SK 12507	80,0 - 400	654	327	1190	75	220
SK 13407	12,6 - 45	704	352	1425	135	240
	50,0 - 71				105	
SK 13507	80,0 - 400	704	352	1365	105	240
SK 14407	20,0 - 50	750	375	1485	135	240
	55,0 - 90				105	
SK 14507	100,0 - 400	750	375	1485	105	240
SK 15407	12,6 - 45	814	407	1665	160	250
	50,0 - 71				130	
SK 15507	80,0 - 400	814	407	1585	100	250





D - Torque Support

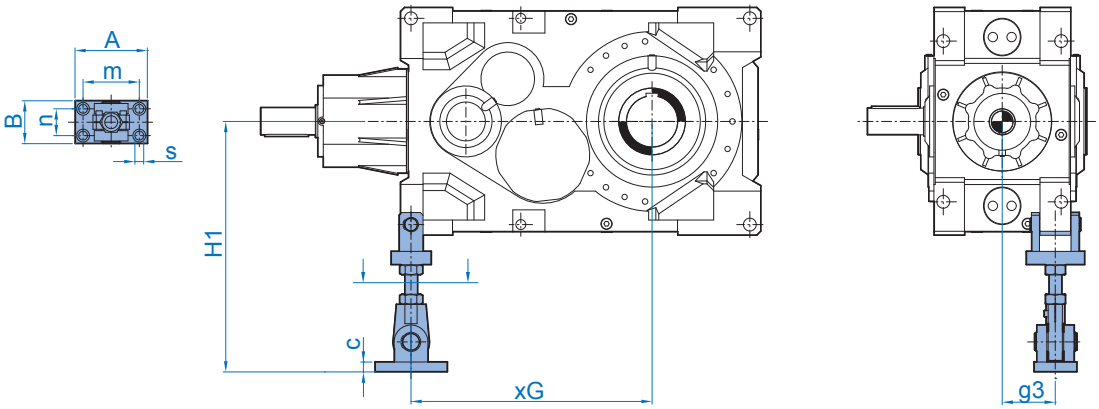

	H1max	H1min	xG	g3	c	A	B	m	n	s
SK 5.07	615	595	475	149	19	200	160	120	160	17,5
SK 6.07	615	595	500	149	19	200	160	120	160	17,5
SK 7.07	645	605	550	150,5	19	200	160	160	120	17,5
SK 8.07	685	635	575	150,5	19	200	160	160	120	17,5
SK 9.07	715	675	692,5	174	19	200	160	160	120	17,5
SK 10.07	765	710	722,5	174	19	200	160	160	120	17,5
SK 11.07	865	815	800	165	29	240	220	180	160	22
SK 12.07	935	885	900	195	29	290	250	220	180	26
SK 13.07	990	940	1005	210	29	290	250	220	180	26
SK 14.07	1080	1030	1060	240	39	330	300	250	220	33
SK 15.07	1120	1070	1200	247,5	39	330	300	250	220	33

ED - Elastic Torque Support

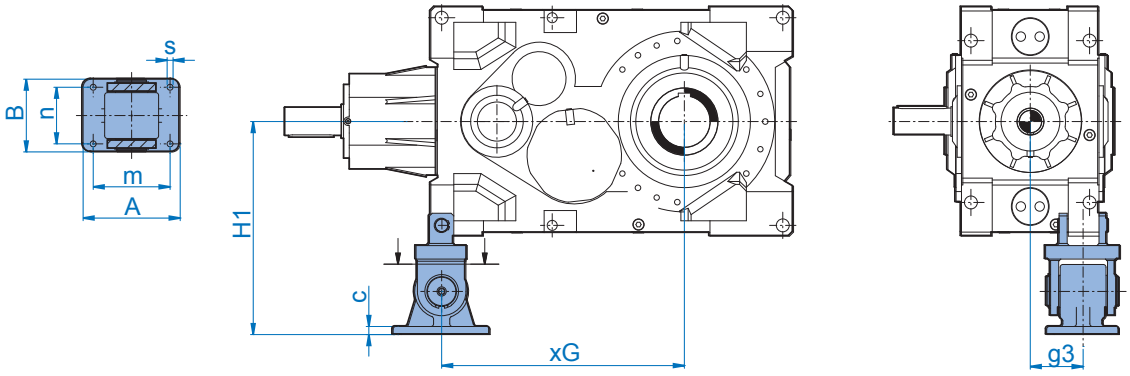

	H1	xG	g3	c	A	B	m	n	s
SK 5..07	460	475	149	21	200	160	160	120	17
SK 6..07	460	500	149	21	200	160	160	120	17
SK 7.07	490	550	150,5	21	200	160	160	120	17
SK 8.07	520	575	150,5	21	200	160	160	120	17
SK 9.07	655	692,5	174	25	260	200	190	140	22
SK 10.07	705	722,5	174	25	260	200	190	140	22
SK 11.07	740	800	167,5	30	360	270	285	210	22
SK 12.07	790	900	196	30	360	270	285	210	22
SK 13.07	890	1005	210	40	400	320	310	230	33
SK 14.07	940	1060	240	40	400	320	310	230	33
SK 15.07	980	1200	245,5	40	400	320	310	230	33

WX - Auxillary Drive

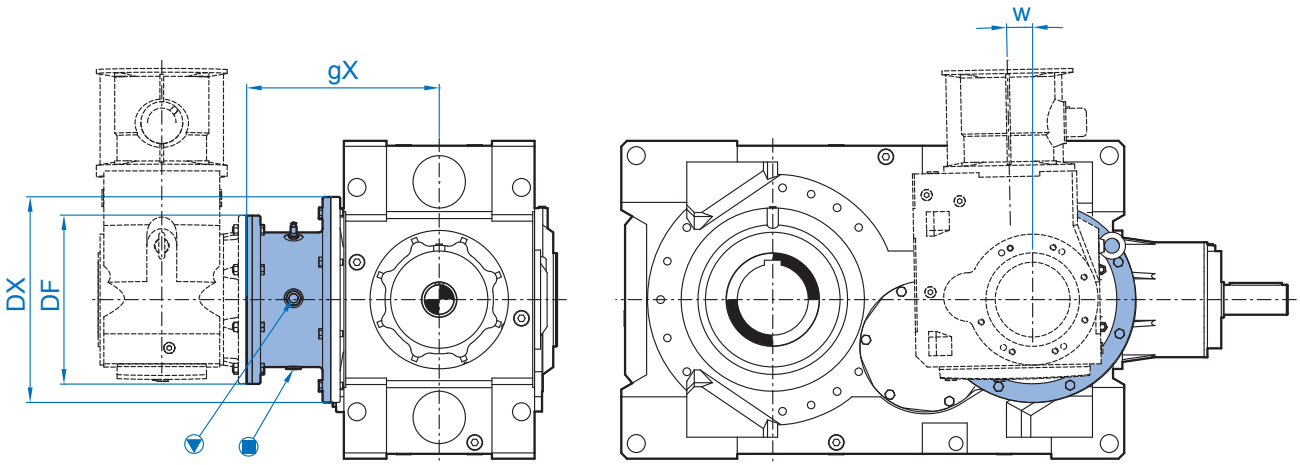

		ø DX	ø DF	gX	w
SK 5..07	SK 9022.1 VF	300	250	345,5	0°
	SK 9032.1 VF	300	250	345,5	0°
SK 6..07	SK 9022.1 VF	300	250	345,5	0°
	SK 9032.1 VF	300	250	345,5	0°
SK 7..07	SK 9022.1 VF	350	250	371,5	0°
	SK 9042.1 VF	350	350	371,5	0°
SK 8..07	SK 9022.1 VF	350	250	371,5	0°
	SK 9042.1 VF	350	350	371,5	0°
SK 9..07	SK 9032.1 VF	350	250	404	0°
	SK 9042.1 VF	350	350	404	0°
SK 10..07	SK 9032.1 VF	350	250	404	0°
	SK 9042.1 VF	350	350	404	0°
SK 11..07	SK 9052.1 VF	450	450	465	0°
	SK 9072.1 VF	450	450	445	0°
SK 12..07	SK 9072.1 VF	550	450	545	0°
	SK 9082.1 VF	550	450	515	0°
SK 13..07	SK 9072.1 VF	550	450	565	0°
	SK 9082.1 VF	550	450	535	0°
SK 14..07	SK 9072.1 VF	550	450	595	0°
	SK 9082.1 VF	550	450	565	0°
SK 15..07	SK 9082.1 VF	550	550	655	0°
	SK 9092.1 VF	550	660	620	0°

CS1 - Water Cooler

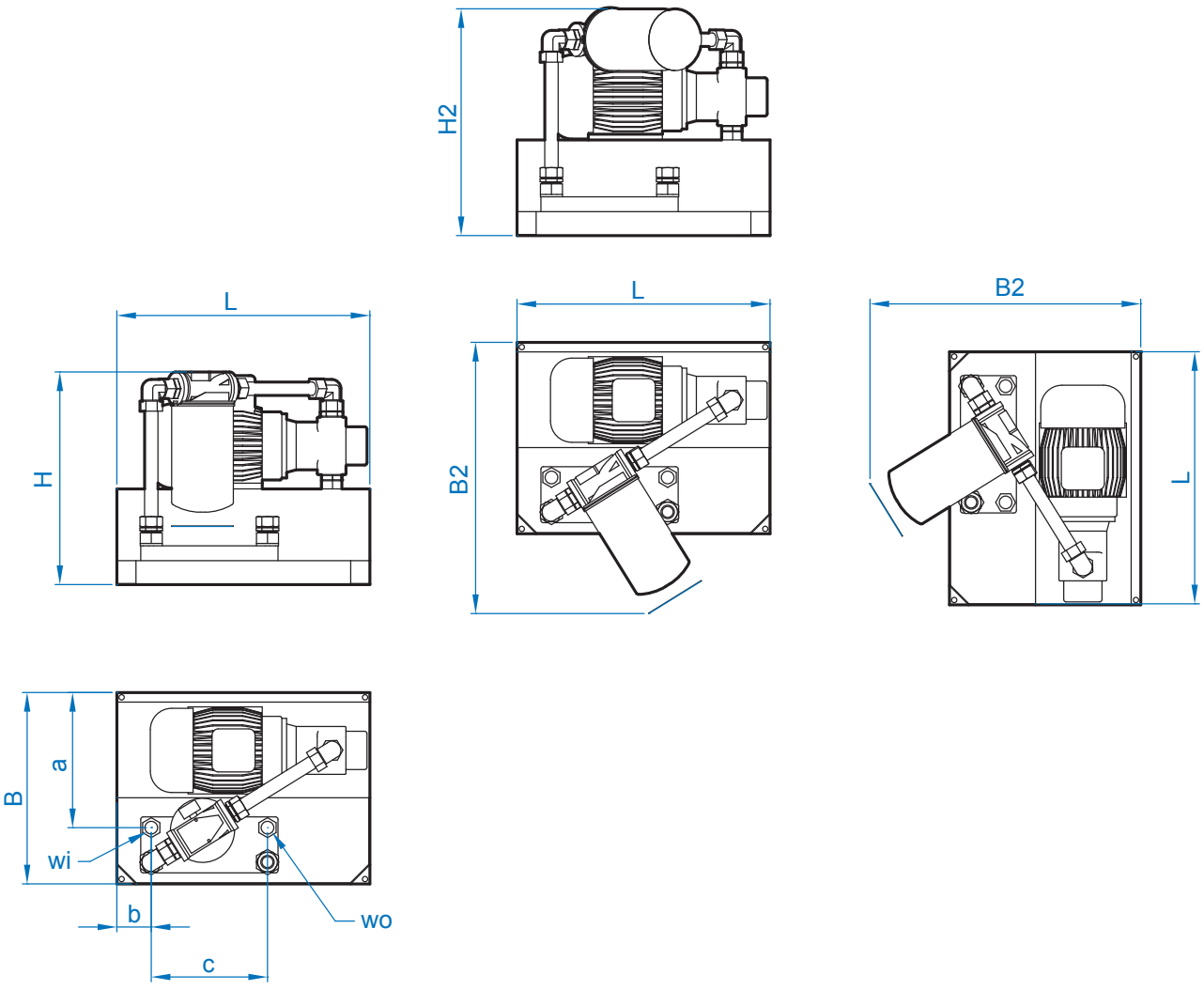

	L	B	B2	H	H2	a	b	c	wi	wo
A	480	420	500	400	430	250	80	278	G 1/2	G 1/2
B	520	394	530	431	450	287	175.5	234	G 3/4	G 3/4
C	520	394	530	431	450	287	175.5	234	G 3/4	G 3/4
D	530	450	570	450	480	282	70	243	G 3/4	G 3/4
E	530	450	570	450	480	282	70	243	G 3/4	G 3/4
F	530	450	570	450	480	282	70	243	G 3/4	G 3/4
G	600	550	650	500	530	340	50	320	G 1	G 1
H	600	550	650	500	530	340	50	320	G 1	G 1

CS2 - Air Cooler

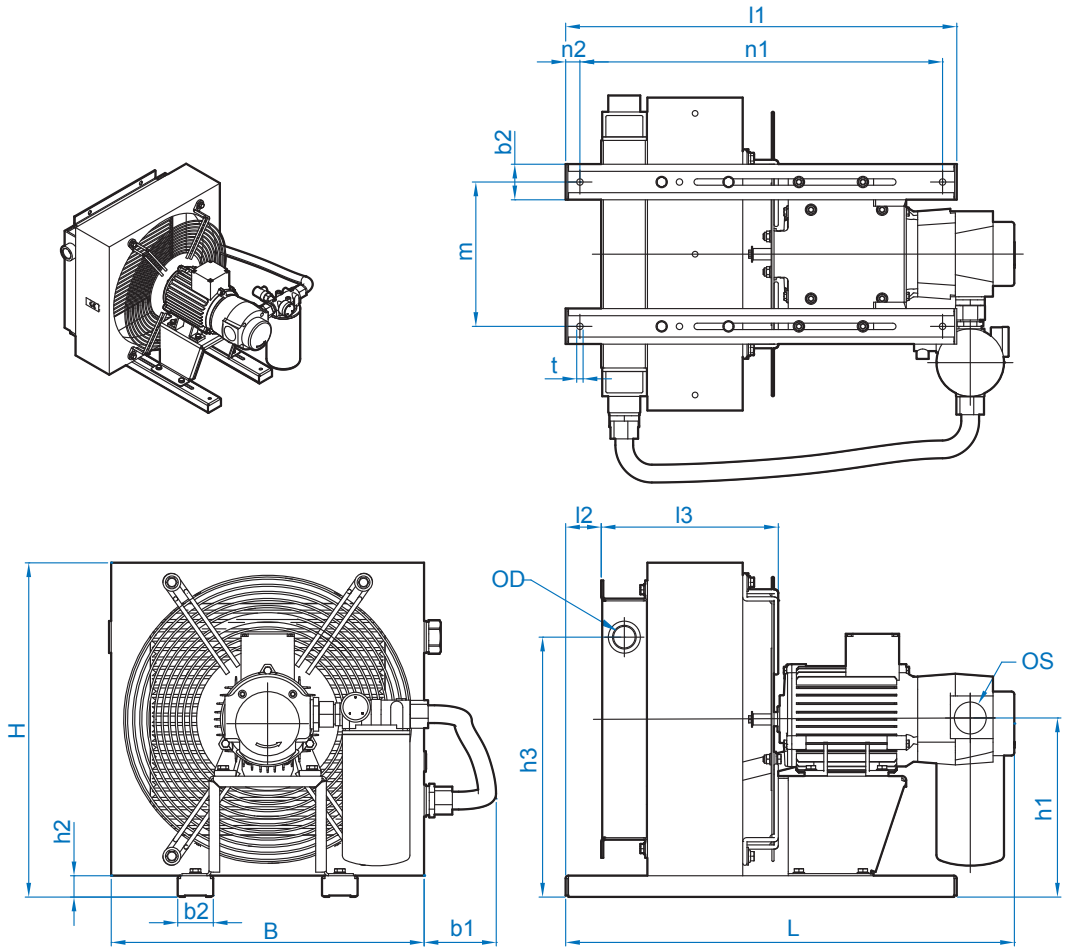

	L	l1	l2	l3	B	b1	b2	H	h1	h2	h3	n1	n2	m	t	os	od
A	755	560	43	173	330	137	30	355	185	15	330	525	15	160	Ø9	G 3/4	G 3/4
B	793	560	43	190	380	137	30	500	235	15	429	525	15	290	Ø9	G 3/4	G 3/4
C	793	560	43	190	380	137	30	500	235	15	429	525	15	290	Ø9	G 3/4	G 3/4
D	932	680	37	229	485	134	30	567	270	20	490	640	20	425	Ø8	G 1 1/2	G 1
E	932	680	37	229	485	134	30	567	270	20	490	640	20	425	Ø8	G 1 1/2	G 1
F	932	680	37	229	485	134	30	567	270	20	490	640	20	425	Ø8	G 1 1/2	G 1
G	1028	680	40	289	584	134	30	687	330	20	579	515	20	482	Ø9	G 1 1/2	G 1 1/4
H	1142	870	42	289	706	119	50	806	408	55	707	830	20	560	Ø12	G 1 1/2	G 1 1/4

CC - Internal Water Cooler (Cooling Coil)

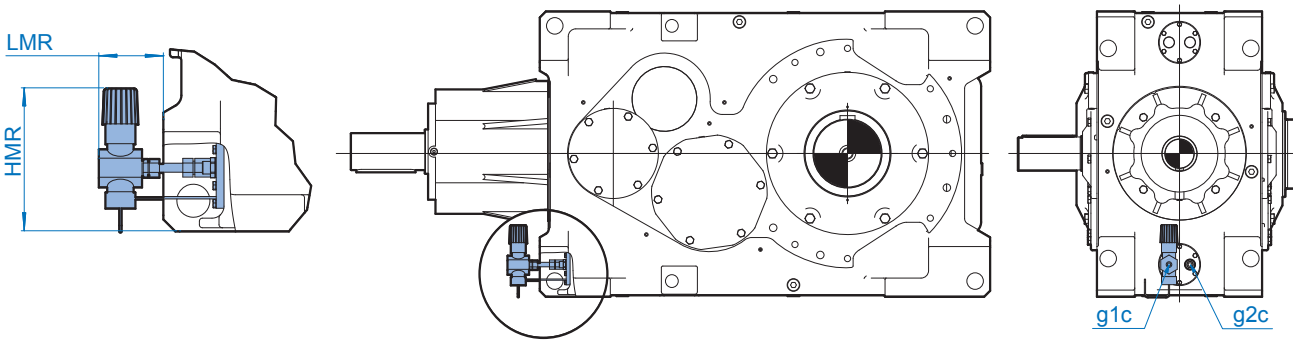

	g1c	g2c	HMR	LMR
SK 5.07	G 3/8"	G 3/8"	238	108
SK 6.07	G 3/8"	G 3/8"	238	108
SK 7.07	G 3/8"	G 3/8"	238	108
SK 8.07	G 3/8"	G 3/8"	238	108
SK 9.07	G 3/8"	G 3/8"	238	108
SK 10.07	G 3/8"	G 3/8"	238	108
SK 11.07	G 1/2"	G 1/2"	238	108
SK 12.07	G 1/2"	G 1/2"	238	108
SK 13.07	G 1/2"	G 1/2"	238	108
SK 14.07	G 1/2"	G 1/2"	238	108
SK 15.07	G 1/2"	G 1/2"	238	108

OH - Oil Heater

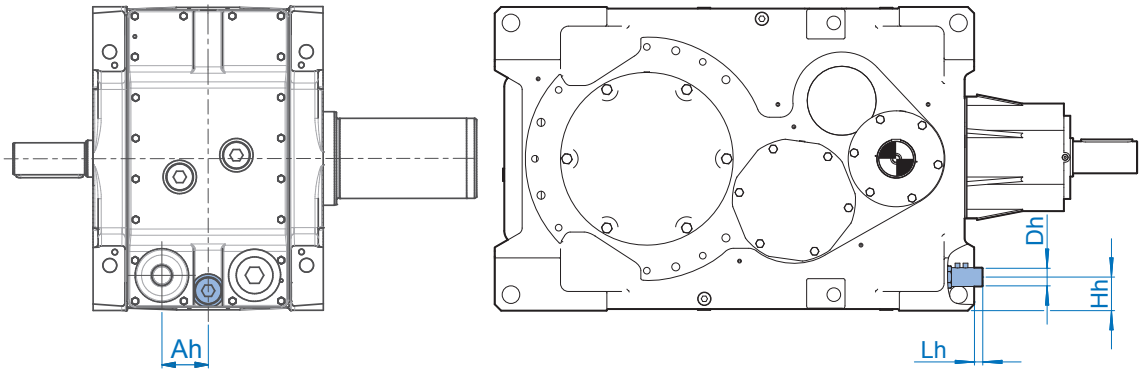

	Ah	ø Dh	Hh	Lh	340 W	380 W	470 W	590 W	760 W	870 W	1030 W	1410 W
SK 5.07	69,5	80	52,5	77,5	**M1/M3 ***							
SK 6.07	69,5	80	52,5	77,5	**M1/M3 ***							
SK 7.07	67,5	80	62,5	60		**M1/M3 ***						
SK 8.07	74	80	62,5	61,5		**M1/M3 ***						
SK 9.07	85	80	69,5	58			**M1/M3 ***					
SK 10.07	87,5	80	70	63,5			**M1/M3 ***					
SK 11.07	70	80	90	57				**M1**			**M3**	
SK 12.07	95	80	110	49				**M1**			**M3**	
SK 13.07	100	80	100	49					**M1**			**M3**
SK 14.07	100	80	95	39					**M1**			**M3**
SK 15.07	125	80	110	20						**M1**		**M3**

* For larger heating capacities, please contact NORD DRIVESYSTEMS. Other mounting configurations can often be used depending on the oil level with an oil heater. Please contact NORD DRIVESYSTEMS.

OT - Oil Tank

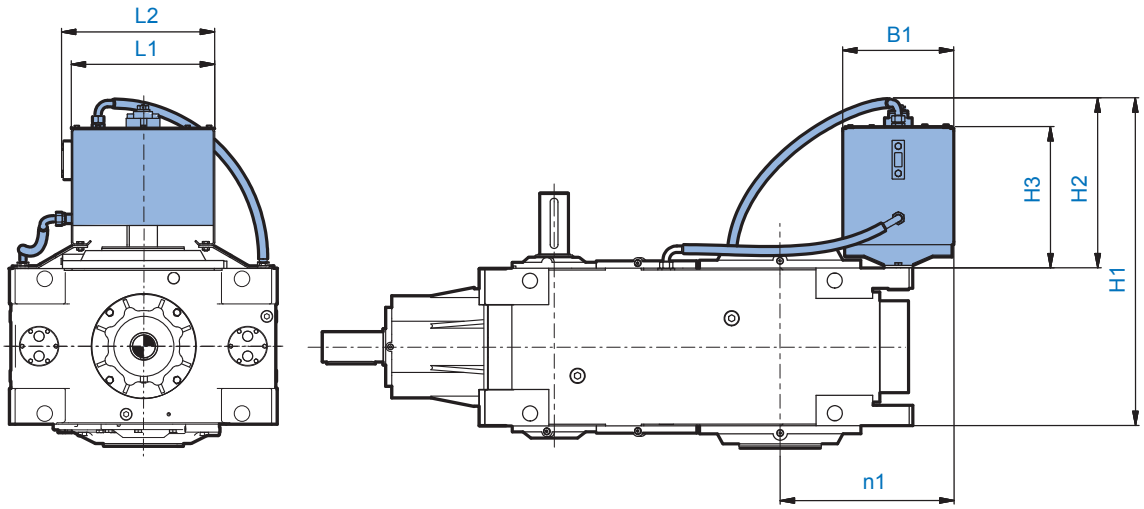

M5 / M6 Mounting	L1	L2	H1	H2	H3	n1	B1
SK 5.07	275	302	771,5	426,5	397,5	440	200
SK 6.07	275	302	771,5	426,5	397,5	440	200
SK 7.07	400	427	824,5	474,5	394,5	425	310
SK 8.07	400	427	858	508	428	455	310
SK 9.07	400	427	923	508	428	457,5	310
SK 10.07	400	427	879	464	384	490	310
SK 11.07	400	427	914	474	394	485	310
SK 12.07	400	427	979,5	469,5	389,5	520	310
SK 13.07	400	427	1069	519	439	580	310
SK 14.07	400	427	1133	523	443	610	310
SK 15.07	00	427	1156	506	426	645	310

Notes





DRIVESYSTEMS

Swingbase Dimensions

SK ..407 / ..507 MSK 264
SK ..407 / ..507 MSKB 266
SK ..407 / ..507 MST 268
SK ..407 / ..507 MSTB 270
SK ..407 / ..507 MFK 272
SK ..407 / ..507 MFKB 274
SK ..407 / ..507 MFT 276
SK ..407 / ..507 MFTB 278

Note: The final dimensions of the vibrations and foundation frames are determined by order.

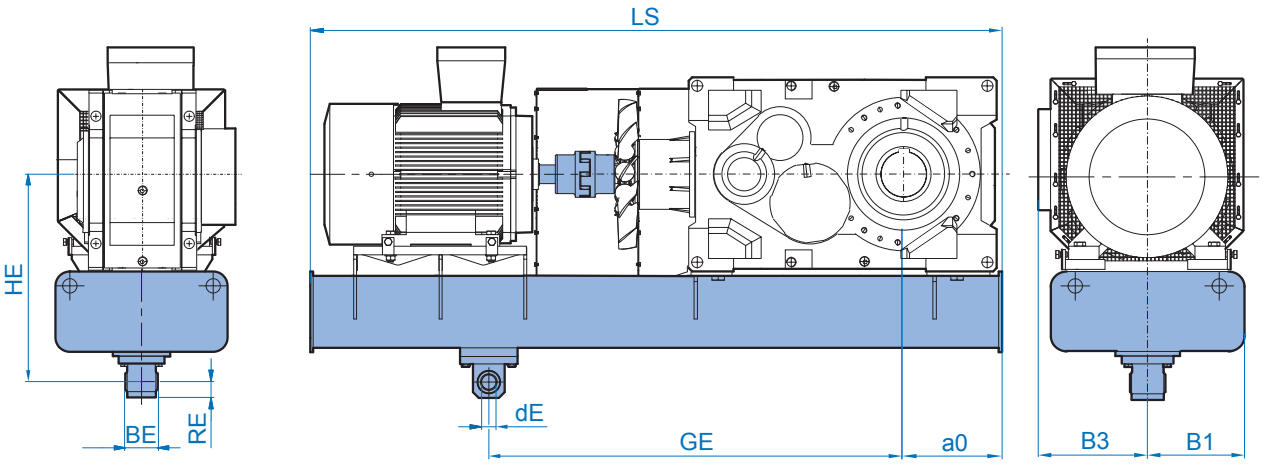

MSK	Motor size	LS	B1	B3	a0	HE	GE	BE	RE	dE
SK 5407 SK 5507	132S/4 - 132M/4	1600	400	290	275	668	900	110	50	50
	160M/4 - 225M/4	1800	400	290	275	668	900	110	50	50
	250M/4 - 315M/4	2100	400	290	275	668	900	110	50	50
	315MA/4 - 315L/4	2350	400	290	275	668	900	110	50	50
SK 6407 SK 6507	132S/4 - 132S/4	1600	400	290	305	688	900	110	50	50
	132M/4 - 200L/4	1850	400	290	305	688	900	110	50	50
	225S/4 - 280M/4	2100	400	290	305	688	900	110	50	50
	315S/4 - 315L/4	2350	400	290	305	688	900	110	50	50
SK 7407 SK 7507	132S/4 - 180L/4	1850	400	315	355	710	1200	110	55	50
	200L/4 - 280M/4	2100	400	315	355	710	1200	110	55	50
	315S/4 - 315S/4	2350	400	315	355	710	1200	110	55	50
SK 8407 SK 8507	132S/4 - 160L/4	1850	400	315	385	735	1200	110	55	50
	180M/4 - 250M/4	2100	400	315	385	735	1200	110	55	50
	280S/4 - 315S/4	2350	400	315	385	735	1200	110	55	50
SK 9407 SK 9507	132S/4 - 180L/4	2100	400	400	390	765	1600	110	55	50
	200L/4 - 280M/4	2350	400	400	390	765	1600	110	55	50
	315S/4 - 315S/4	2600	400	400	390	765	1600	110	55	50
SK 10407 SK 10507	132S/4 - 250M/4	2350	400	400	425	800	1800	110	55	50
	280S/4 - 315S/4	2600	400	400	425	800	1800	110	55	50
SK 11407	225S/4 - 280M/4	2600	400	440	430	900	1800	120	90	100
	315S/4 - 315L/4	2850	400	440	430	900	1800	120	90	100
	315LA/4 - 355M/4	3100	400	440	430	900	1800	120	90	100
SK 11507	160M/4 - 225S/4	2350	400	440	430	900	1800	120	90	100
	225M/4 - 280M/4	2600	400	440	430	900	1800	120	90	100

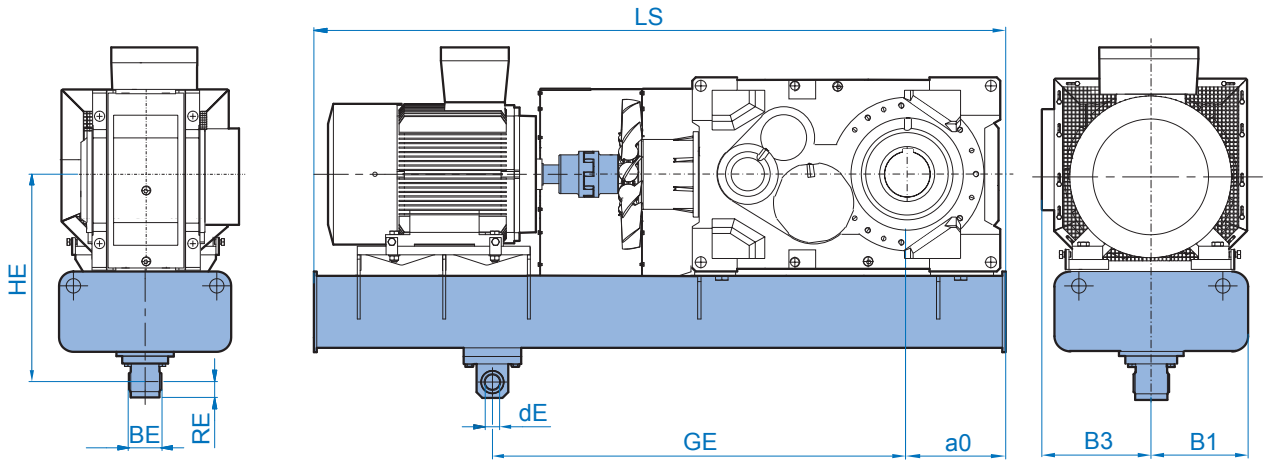

MSK	Motor size	LS	B1	B3	a0	HE	GE	BE	RE	dE
SK 12407	225S/4 - 280M/4	2850	400	480	465	1050	2000	120	90	100
	315S/4 - 315L/4	3100	400	480	465	1050	2000	120	90	100
	315LA/4 - 355M/4	3350	400	480	465	1050	2000	120	90	100
SK 12507	160M/4 - 250M/4	2600	400	480	465	1050	2000	120	90	100
	280S/4 - 280M/4	2850	400	480	465	1050	2000	120	90	100
SK 13407	250M/4 - 280M/4	3100	400	555	535	1128	1800	230	100	124
	315S/4 - 315LB/4	3350	400	555	535	1128	1800	230	100	124
	355S/4 - 355M/4	3600	400	555	535	1128	1800	230	100	124
SK 13507	180M/4 - 250M/4	2850	400	555	535	1128	1800	230	100	124
	280S/4 - 280M/4	3100	400	555	535	1128	1800	230	100	124
SK 14407	315S/4 - 315L/4	3600	400	585	565	1178	2000	230	100	124
	315LA/4 - 315LB/4	3850	400	585	565	1178	2000	230	100	124
	355S/4 - 355M/4	3850	400	585	565	1178	2000	230	100	124
SK 14507	180M/4 - 250M/4	3100	400	585	565	1178	2000	230	100	124
	280S/4 - 280M/4	3350	400	585	565	1178	2000	230	100	124
SK 15407	280S/4 - 315L/4	3600	400	605	605	1300	2000	230	100	124
	315LA/4 - 315LB/4	3850	400	605	605	1300	2000	230	100	124
	355S/4 - 355M/4	4100	400	605	605	1300	2000	230	100	124
SK 15507	225S/4 - 225M/4	3100	400	605	605	1300	2000	230	100	124
	250M/4 - 315S/4	3350	400	605	605	1300	2000	230	100	124
	315M/4 - 315LB/4	3600	400	605	605	1300	2000	230	100	124

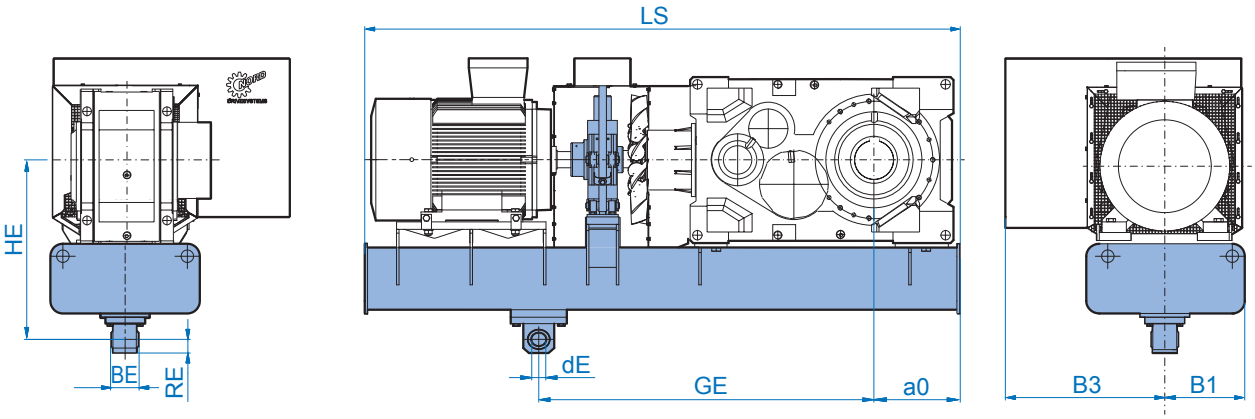

MSKB	Motor size	LS	B1	B3	a0	HE	GE	BE	RE	dE
SK 5407 SK 5507	132S/4 - 132M/4	1600	400	290	275	668	900	110	50	50
	160M/4 - 225M/4	1800	400	290	275	668	900	110	50	50
	250M/4 - 315M/4	2100	400	290	275	668	900	110	50	50
	315MA/4 - 315L/4	2350	400	290	275	668	900	110	50	50
SK 6407 SK 6507	132S/4 - 132S/4	1600	400	290	305	688	900	110	50	50
	132M/4 - 200L/4	1850	400	290	305	688	900	110	50	50
	225S/4 - 280M/4	2100	400	290	305	688	900	110	50	50
	315S/4 - 315L/4	2350	400	290	305	688	900	110	50	50
SK 7407 SK 7507	132S/4 - 180L/4	1850	400	315	355	710	1200	110	55	50
	200L/4 - 280M/4	2100	400	315	355	710	1200	110	55	50
	315S/4 - 315S/4	2350	400	315	355	710	1200	110	55	50
SK 8407 SK 8507	132S/4 - 160L/4	1850	400	315	385	735	1200	110	55	50
	180M/4 - 250M/4	2100	400	315	385	735	1200	110	55	50
	280S/4 - 315S/4	2350	400	315	385	735	1200	110	55	50
SK 9407 SK 9507	132S/4 - 180L/4	2100	400	400	390	765	1600	110	55	50
	200L/4 - 280M/4	2350	400	400	390	765	1600	110	55	50
	315S/4 - 315S/4	2600	400	400	390	765	1600	110	55	50
SK 10407 SK 10507	132S/4 - 250M/4	2350	400	400	425	800	1800	110	55	50
	280S/4 - 315S/4	2600	400	400	425	800	1800	110	55	50
SK 11407	225S/4 - 280M/4	2600	400	440	430	900	1800	120	90	100
	315S/4 - 315L/4	2850	400	440	430	900	1800	120	90	100
	315LA/4 - 355M/4	3100	400	440	430	900	1800	120	90	100
SK 11507	160M/4 - 225S/4	2350	400	440	430	900	1800	120	90	100
	225M/4 - 280M/4	2600	400	440	430	900	1800	120	90	100

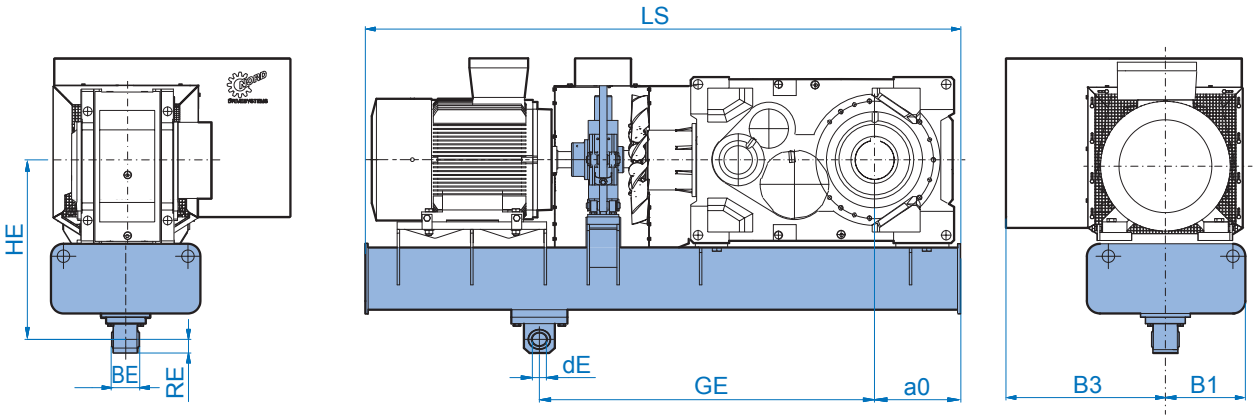

MSKB	Motor size	LS	B1	B3	a0	HE	GE	BE	RE	dE
SK 12407	225S/4 - 280M/4	2850	400	480	465	1050	2000	120	90	100
	315S/4 - 315L/4	3100	400	480	465	1050	2000	120	90	100
	315LA/4 - 355M/4	3350	400	480	465	1050	2000	120	90	100
SK 12507	160M/4 - 250M/4	2600	400	480	465	1050	2000	120	90	100
	280S/4 - 280M/4	2850	400	480	465	1050	2000	120	90	100
SK 13407	250M/4 - 280M/4	3100	400	555	535	1128	1800	230	100	124
	315S/4 - 315LB/4	3350	400	555	535	1128	1800	230	100	124
	355S/4 - 355M/4	3600	400	555	535	1128	1800	230	100	124
SK 13507	180M/4 - 250M/4	2850	400	555	535	1128	1800	230	100	124
	280S/4 - 280M/4	3100	400	555	535	1128	1800	230	100	124
SK 14407	315S/4 - 315L/4	3600	400	585	565	1178	2000	230	100	124
	315LA/4 - 315LB/4	3850	400	585	565	1178	2000	230	100	124
	355S/4 - 355M/4	3850	400	585	565	1178	2000	230	100	124
SK 14507	180M/4 - 250M/4	3100	400	585	565	1178	2000	230	100	124
	280S/4 - 280M/4	3350	400	585	565	1178	2000	230	100	124
SK 15407	280S/4 - 315L/4	3600	400	605	605	1300	2000	230	100	124
	315LA/4 - 315LB/4	3850	400	605	605	1300	2000	230	100	124
	355S/4 - 355M/4	4100	400	605	605	1300	2000	230	100	124
SK 15507	225S/4 - 225M/4	3100	400	605	605	1300	2000	230	100	124
	250M/4 - 315S/4	3350	400	605	605	1300	2000	230	100	124
	315M/4 - 315LB/4	3600	400	605	605	1300	2000	230	100	124

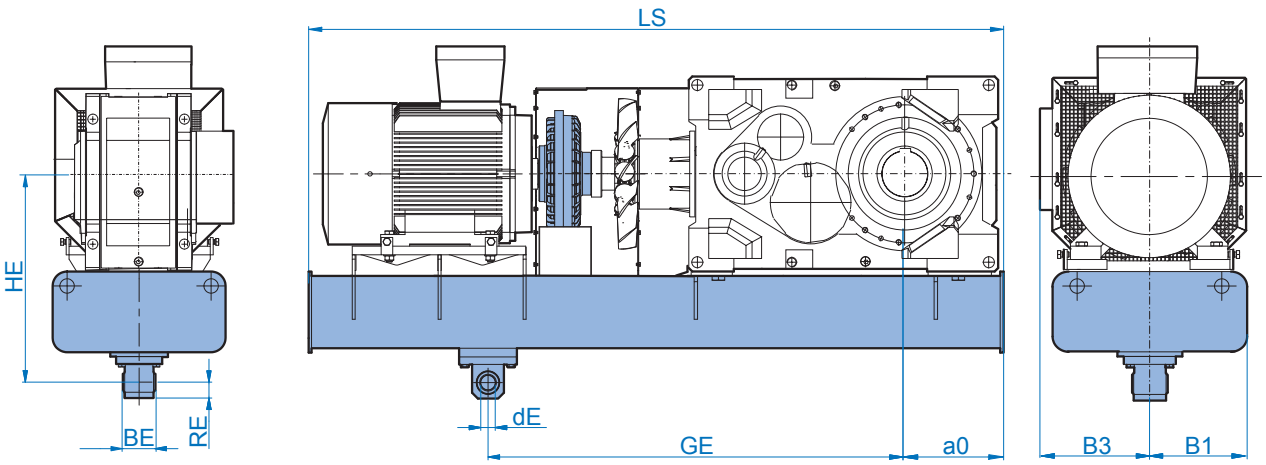

MST	Motor size	LS	B1	B3	a0	HE	GE	BE	RE	dE
SK 5407 SK 5507	132S/4 - 132M/4	1600	400	290	275	668	900	110	50	50
	160M/4 - 225M/4	1800	400	290	275	668	900	110	50	50
	250M/4 - 315M/4	2100	400	290	275	668	900	110	50	50
	315MA/4 - 315L/4	2350	400	290	275	668	900	110	50	50
SK 6407 SK 6507	132S/4 - 132S/4	1600	400	290	305	688	900	110	50	50
	132M/4 - 200L/4	1850	400	290	305	688	900	110	50	50
	225S/4 - 280M/4	2100	400	290	305	688	900	110	50	50
	315S/4 - 315L/4	2350	400	290	305	688	900	110	50	50
SK 7407 SK 7507	132S/4 - 180L/4	1850	400	315	355	710	1200	110	55	50
	200L/4 - 280M/4	2100	400	315	355	710	1200	110	55	50
	315S/4 - 315S/4	2350	400	315	355	710	1200	110	55	50
SK 8407 SK 8507	132S/4 - 160L/4	1850	400	315	385	735	1200	110	55	50
	180M/4 - 250M/4	2100	400	315	385	735	1200	110	55	50
	280S/4 - 315S/4	2350	400	315	385	735	1200	110	55	50
SK 9407 SK 9507	132S/4 - 180L/4	2100	400	400	390	765	1600	110	55	50
	200L/4 - 280M/4	2350	400	400	390	765	1600	110	55	50
	315S/4 - 315S/4	2600	400	400	390	765	1600	110	55	50
SK 10407 SK 10507	132S/4 - 250M/4	2350	400	400	425	800	1800	110	55	50
	280S/4 - 315S/4	2600	400	400	425	800	1800	110	55	50
SK 11407	225S/4 - 280M/4	2600	400	440	430	900	1800	120	90	100
	315S/4 - 315L/4	2850	400	440	430	900	1800	120	90	100
	315LA/4 - 355M/4	3100	400	440	430	900	1800	120	90	100
SK 11507	160M/4 - 225S/4	2350	400	440	430	900	1800	120	90	100
	225M/4 - 280M/4	2600	400	440	430	900	1800	120	90	100

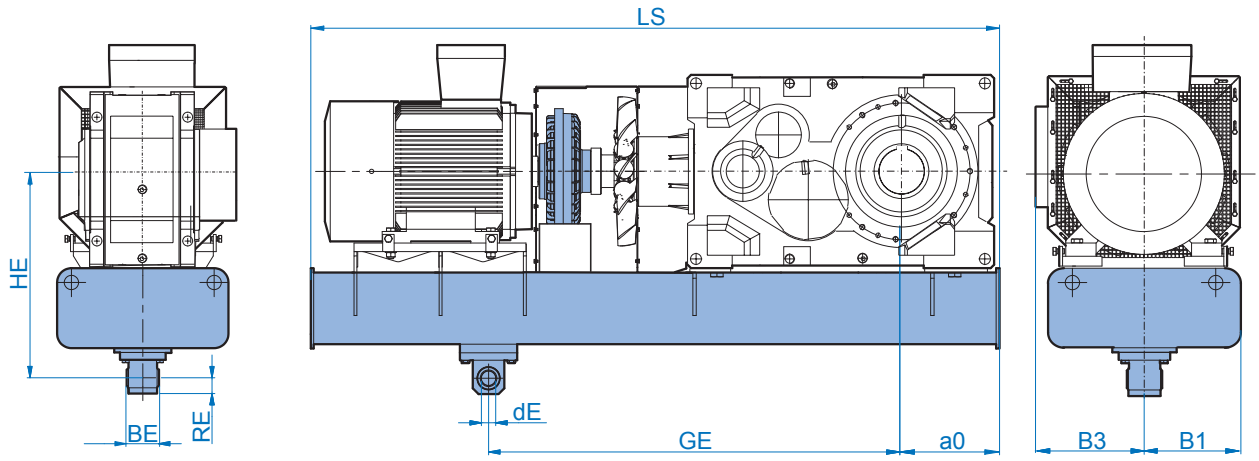

MST	Motor size	LS	B1	B3	a0	HE	GE	BE	RE	dE
SK 12407	225S/4 - 280M/4	2850	400	480	465	1050	2000	120	90	100
	315S/4 - 315L/4	3100	400	480	465	1050	2000	120	90	100
	315LA/4 - 355M/4	3350	400	480	465	1050	2000	120	90	100
SK 12507	160M/4 - 250M/4	2600	400	480	465	1050	2000	120	90	100
	280S/4 - 280M/4	2850	400	480	465	1050	2000	120	90	100
SK 13407	250M/4 - 280M/4	3100	400	555	535	1128	1800	230	100	124
	315S/4 - 315LB/4	3350	400	555	535	1128	1800	230	100	124
	355S/4 - 355M/4	3600	400	555	535	1128	1800	230	100	124
SK 13507	180M/4 - 250M/4	2850	400	555	535	1128	1800	230	100	124
	280S/4 - 280M/4	3100	400	555	535	1128	1800	230	100	124
SK 14407	315S/4 - 315L/4	3600	400	585	565	1178	2000	230	100	124
	315LA/4 - 315LB/4	3850	400	585	565	1178	2000	230	100	124
	355S/4 - 355M/4	3850	400	585	565	1178	2000	230	100	124
SK 14507	180M/4 - 250M/4	3100	400	585	565	1178	2000	230	100	124
	280S/4 - 280M/4	3350	400	585	565	1178	2000	230	100	124
SK 15407	280S/4 - 315L/4	3600	400	605	605	1300	2000	230	100	124
	315LA/4 - 315LB/4	3850	400	605	605	1300	2000	230	100	124
	355S/4 - 355M/4	4100	400	605	605	1300	2000	230	100	124
SK 15507	225S/4 - 225M/4	3100	400	605	605	1300	2000	230	100	124
	250M/4 - 315S/4	3350	400	605	605	1300	2000	230	100	124
	315M/4 - 315LB/4	3600	400	605	605	1300	2000	230	100	124

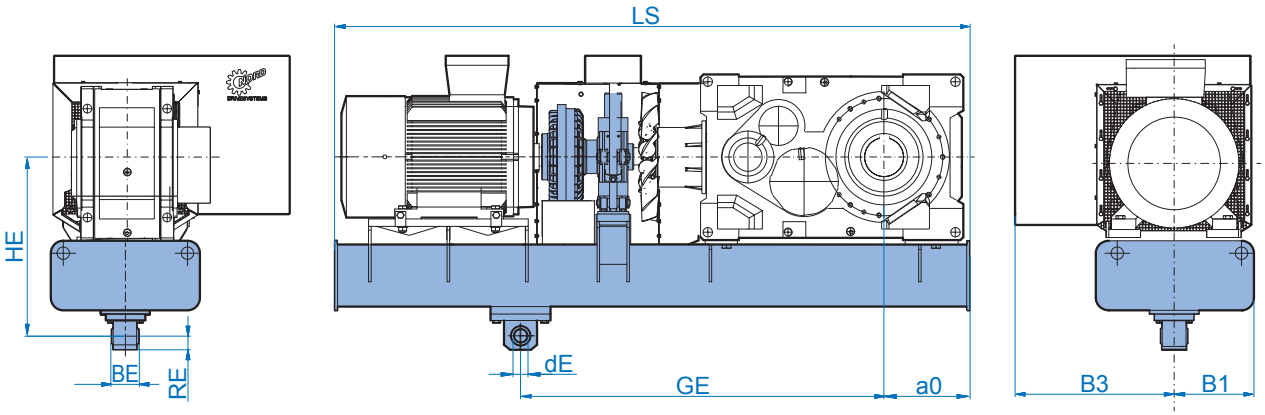

MSTB	Motor size	LS	B1	B3	a0	HE	GE	BE	RE	dE
SK 5407 SK 5507	132S/4 - 132M/4	1600	400	290	275	668	900	110	50	50
	160M/4 - 225M/4	1800	400	290	275	668	900	110	50	50
	250M/4 - 315M/4	2100	400	290	275	668	900	110	50	50
	315MA/4 - 315L/4	2350	400	290	275	668	900	110	50	50
SK 6407 SK 6507	132S/4 - 132S/4	1600	400	290	305	688	900	110	50	50
	132M/4 - 200L/4	1850	400	290	305	688	900	110	50	50
	225S/4 - 280M/4	2100	400	290	305	688	900	110	50	50
	315S/4 - 315L/4	2350	400	290	305	688	900	110	50	50
SK 7407 SK 7507	132S/4 - 180L/4	1850	400	315	355	710	1200	110	55	50
	200L/4 - 280M/4	2100	400	315	355	710	1200	110	55	50
	315S/4 - 315S/4	2350	400	315	355	710	1200	110	55	50
SK 8407 SK 8507	132S/4 - 160L/4	1850	400	315	385	735	1200	110	55	50
	180M/4 - 250M/4	2100	400	315	385	735	1200	110	55	50
	280S/4 - 315S/4	2350	400	315	385	735	1200	110	55	50
SK 9407 SK 9507	132S/4 - 180L/4	2100	400	400	390	765	1600	110	55	50
	200L/4 - 280M/4	2350	400	400	390	765	1600	110	55	50
	315S/4 - 315S/4	2600	400	400	390	765	1600	110	55	50
SK 10407 SK 10507	132S/4 - 250M/4	2350	400	400	425	800	1800	110	55	50
	280S/4 - 315S/4	2600	400	400	425	800	1800	110	55	50
SK 11407	225S/4 - 280M/4	2600	400	440	430	900	1800	120	90	100
	315S/4 - 315L/4	2850	400	440	430	900	1800	120	90	100
	315LA/4 - 355M/4	3100	400	440	430	900	1800	120	90	100
SK 11507	160M/4 - 225S/4	2350	400	440	430	900	1800	120	90	100
	225M/4 - 280M/4	2600	400	440	430	900	1800	120	90	100

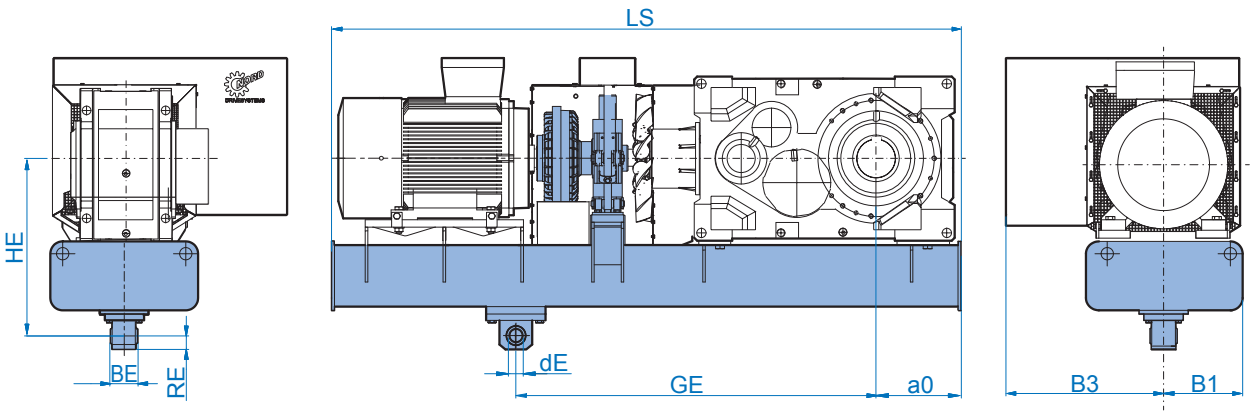

MSTB	Motor size	LS	B1	B3	a0	HE	GE	BE	RE	dE
SK 12407	225S/4 - 280M/4	2850	400	480	465	1050	2000	120	90	100
	315S/4 - 315L/4	3100	400	480	465	1050	2000	120	90	100
	315LA/4 - 355M/4	3350	400	480	465	1050	2000	120	90	100
SK 12507	160M/4 - 250M/4	2600	400	480	465	1050	2000	120	90	100
	280S/4 - 280M/4	2850	400	480	465	1050	2000	120	90	100
SK 13407	250M/4 - 280M/4	3100	400	555	535	1128	1800	230	100	124
	315S/4 - 315LB/4	3350	400	555	535	1128	1800	230	100	124
	355S/4 - 355M/4	3600	400	555	535	1128	1800	230	100	124
SK 13507	180M/4 - 250M/4	2850	400	555	535	1128	1800	230	100	124
	280S/4 - 280M/4	3100	400	555	535	1128	1800	230	100	124
SK 14407	315S/4 - 315L/4	3600	400	585	565	1178	2000	230	100	124
	315LA/4 - 315LB/4	3850	400	585	565	1178	2000	230	100	124
	355S/4 - 355M/4	3850	400	585	565	1178	2000	230	100	124
SK 14507	180M/4 - 250M/4	3100	400	585	565	1178	2000	230	100	124
	280S/4 - 280M/4	3350	400	585	565	1178	2000	230	100	124
SK 15407	280S/4 - 315L/4	3600	400	605	605	1300	2000	230	100	124
	315LA/4 - 315LB/4	3850	400	605	605	1300	2000	230	100	124
	355S/4 - 355M/4	4100	400	605	605	1300	2000	230	100	124
SK 15507	225S/4 - 225M/4	3100	400	605	605	1300	2000	230	100	124
	250M/4 - 315S/4	3350	400	605	605	1300	2000	230	100	124
	315M/4 - 315LB/4	3600	400	605	605	1300	2000	230	100	124

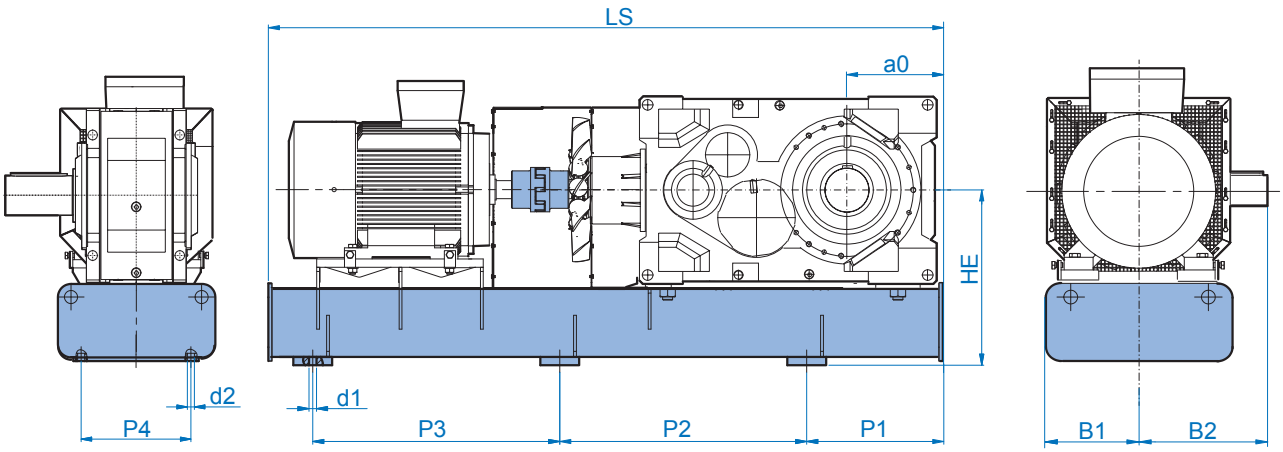

MFK	Motor size	LS	B1	B2	a0	HE	P1	P2	P3	P4	d1	d2
SK 5407 SK 5507	132S/4 - 132M/4	1600	400	403	275	583	250	550	550	290	40	22
	160M/4 - 225M/4	1850	400	403	275	583	250	675	675	290	40	22
	250M/4 - 315M/4	2100	400	403	275	583	250	800	800	290	40	22
	315MA/4 - 315L/4	2350	400	403	275	583	250	925	925	290	40	22
SK 6407 SK 6507	132S/4 - 132S/4	1600	400	403	305	603	250	550	550	290	40	22
	132M/4 - 200L/4	1850	400	403	305	603	250	675	675	290	40	22
	225S/4 - 280M/4	2100	400	403	305	603	250	800	800	290	40	22
	315S/4 - 315L/4	2350	400	403	305	603	250	925	925	290	40	22
SK 7407 SK 7507	132S/4 - 160M/4	1850	400	452	355	620	270	655	655	290	40	22
	160L/4 - 250M/4	2100	400	452	355	620	270	780	780	290	40	22
	280S/4 - 315L/4	2350	400	452	355	620	270	905	905	290	40	22
SK 8407 SK 8507	132S/4 - 132M/4	1850	400	452	385	650	270	655	655	290	40	22
	160M/4 - 225M/4	2100	400	452	385	650	270	780	780	290	40	22
	250M/4 - 315M/4	2350	400	452	385	650	270	905	905	290	40	22
SK 9407 SK 9507	132S/4 - 180L/4	2100	400	557	390	680	270	780	780	350	40	22
	200L/4 - 280M/4	2350	400	557	390	680	270	905	905	350	40	22
	315S/4 - 315L/4	2600	400	557	390	680	270	1030	1030	350	40	22
SK 10407 SK 10507	132S/4 - 160M/4	2100	400	557	425	715	270	780	780	350	40	22
	160L/4 - 250M/4	2350	400	557	425	715	270	905	905	350	40	22
	280S/4 - 315L/4	2600	400	557	425	715	270	1030	1030	350	40	22
SK 11407	225S/4 - 280M/4	2600	400	580	430	740	270	1030	1030	350	45	26
	315S/4 - 315L/4	2850	400	580	430	740	270	1155	1155	350	45	26
	315LA/4 - 355M/4	3100	400	580	430	740	270	1280	1280	350	45	26
SK 11507	160M/4 - 225S/4	2350	400	580	430	740	270	905	905	350	45	26
	225M/4 - 280M/4	2600	400	580	430	740	270	1030	1030	350	45	26

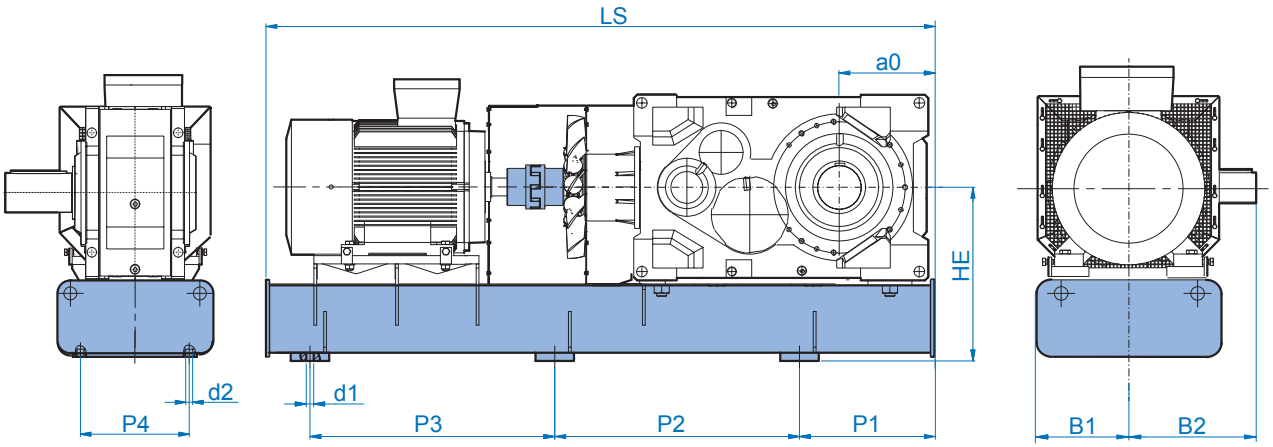

MFK	Motor size	LS	B1	B2	a0	HE	P1	P2	P3	P4	d1	d2
SK 12407	225S/4 - 280M/4	2850	400	665	465	890	270	1155	1155	500	45	26
	315S/4 - 315L/4	3100	400	665	465	890	270	1280	1280	500	45	26
	315LA/4 - 355M/4	3350	400	665	465	890	270	1405	1405	500	45	26
SK 12507	160L/4 - 250M/4	2600	400	665	465	890	270	1030	1030	500	45	26
	280S/4 - 280M/4	2850	400	665	465	890	270	1155	1155	500	45	26
SK 13407	250M/4 - 280M/4	3100	400	763	535	940	300	1250	1250	500	45	26
	315S/4 - 315LB/4	3350	400	763	535	940	300	1375	1375	500	45	26
	355S/4 - 355M/4	3600	400	763	535	940	300	1500	1500	500	45	26
SK 13507	180M/4 - 250M/4	2850	400	763	535	940	300	1125	1125	500	45	26
	280S/4 - 280M/4	3100	400	763	535	940	300	1250	1250	500	45	26
SK 14407	315S/4 - 315L/4	3600	400	793	565	990	300	1500	1500	500	45	26
	315LA/4 - 315LB/4	3850	400	793	565	990	300	1625	1625	500	45	26
	355S/4 - 355M/4	4100	400	793	565	990	300	1750	1750	500	45	26
SK 14507	180M/4 - 250M/4	3100	400	793	565	990	300	1250	1250	500	45	26
	280S/4 - 280M/4	3350	400	793	565	990	300	1375	1375	500	45	26
SK 15407	280S/4 - 315L/4	3600	400	805	605	1125	300	1500	1500	500	45	26
	315LA/4 - 315LB/4	3850	400	805	605	1125	300	1625	1625	500	45	26
	355S/4 - 355M/4	4100	400	805	605	1125	300	1750	1750	500	45	26
SK 15507	225S/4 - 225M/4	3100	400	805	605	1125	300	1250	1250	500	45	26
	250M/4 - 315S/4	3350	400	805	605	1125	300	1375	1375	500	45	26

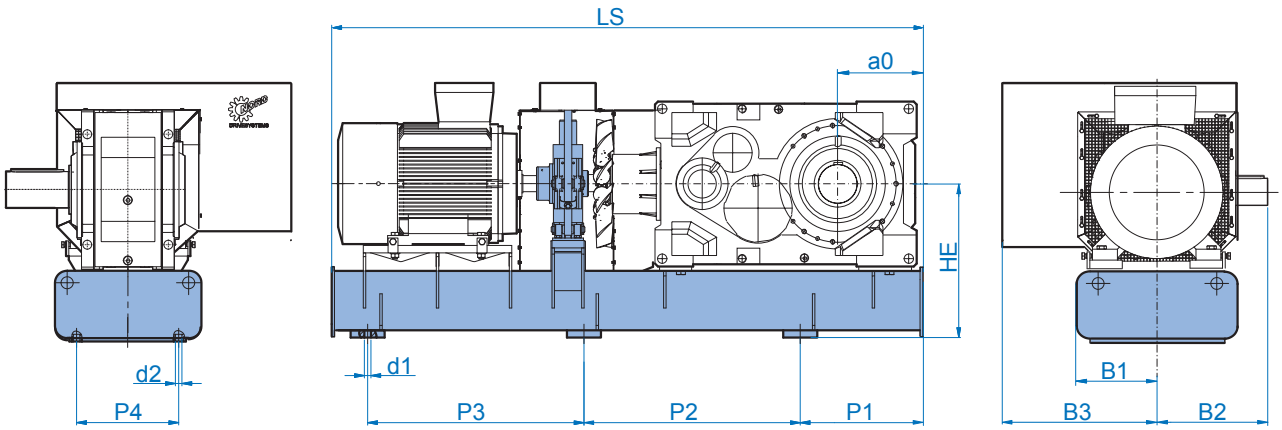

MFKB	Motor size	LS	B1	B2	B3	a0	HE	P1	P2	P3	P4	d1	d2
SK 5407 SK 5507	132S/4 - 132M/4	1600	400	403	500	275	583	250	550	550	290	40	22
	160M/4 - 225M/4	1850	400	403	655	275	583	250	675	675	290	40	22
	250M/4 - 315M/4	2100	400	403	695	275	583	250	800	800	290	40	22
	315MA/4 - 315L/4	2350	400	403	860	275	583	250	925	925	290	40	22
SK 6407 SK 6507	132S/4 - 132S/4	1600	400	403	500	305	603	250	550	550	290	40	22
	132M/4 - 200L/4	1850	400	403	580	305	603	250	675	675	290	40	22
	225S/4 - 280M/4	2100	400	403	695	305	603	250	800	800	290	40	22
	315S/4 - 315L/4	2350	400	403	860	305	603	250	925	925	290	40	22
SK 7407 SK 7507	132S/4 - 160M/4	1850	400	452	500	355	620	270	655	655	290	40	22
	160L/4 - 250M/4	2100	400	452	695	355	620	270	780	780	290	40	22
	280S/4 - 315L/4	2350	400	452	860	355	620	270	905	905	290	40	22
SK 8407 SK 8507	132S/4 - 132M/4	1850	400	452	500	385	650	270	655	655	290	40	22
	160M/4 - 225M/4	2100	400	452	655	385	650	270	780	780	290	40	22
	250M/4 - 315M/4	2350	400	452	695	385	650	270	905	905	290	40	22
SK 9407 SK 9507	132S/4 - 180L/4	2100	400	557	500	390	680	270	780	780	350	40	22
	200L/4 - 280M/4	2350	400	557	695	390	680	270	905	905	350	40	22
	315S/4 - 315L/4	2600	400	557	860	390	680	270	1030	1030	350	40	22
SK 10407 SK 10507	132S/4 - 160M/4	2100	400	557	500	425	715	270	780	780	350	40	22
	160L/4 - 250M/4	2350	400	557	695	425	715	270	905	905	350	40	22
	280S/4 - 315L/4	2600	400	557	860	425	715	270	1030	1030	350	40	22
SK 11407	225S/4 - 280M/4	2600	400	580	695	430	740	270	1030	1030	350	45	26
	315S/4 - 315L/4	2850	400	580	860	430	740	270	1155	1155	350	45	26
	315LA/4 - 355M/4	3100	400	580	860	430	740	270	1280	1280	350	45	26
SK 11507	160M/4 - 225S/4	2350	400	580	580	430	740	270	905	905	350	45	26
	225M/4 - 280M/4	2600	400	580	695	430	740	270	1030	1030	350	45	26

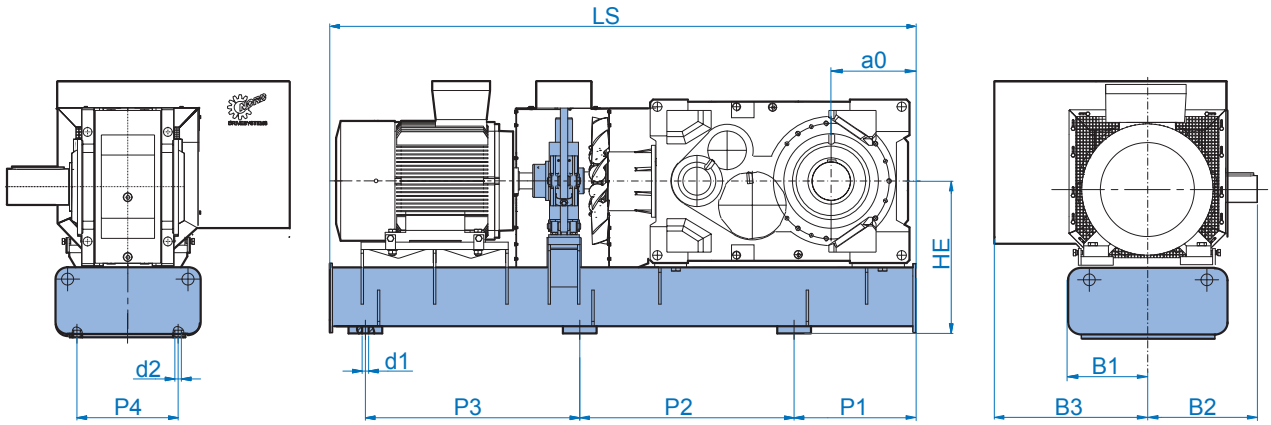

MFKB	Motor size	LS	B1	B2	B3	a0	HE	P1	P2	P3	P4	d1	d2
SK 12407	225S/4 - 280M/4	2850	400	665	695	465	890	270	1155	1155	500	45	26
	315S/4 - 315L/4	3100	400	665	860	465	890	270	1280	1280	500	45	26
	315LA/4 - 355M/4	3350	400	665	860	465	890	270	1405	1405	500	45	26
SK 12507	160L/4 - 250M/4	2600	400	665	695	465	890	270	1030	1030	500	45	26
	280S/4 - 280M/4	2850	400	665	695	465	890	270	1155	1155	500	45	26
SK 13407	250M/4 - 280M/4	3100	400	763	695	535	940	300	1250	1250	500	45	26
	315S/4 - 315LB/4	3350	400	763	860	535	940	300	1375	1375	500	45	26
	355S/4 - 355M/4	3600	400	763	860	535	940	300	1500	1500	500	45	26
SK 13507	180M/44 - 250M/4	2850	400	763	695	535	940	300	1125	1125	500	45	26
	280S/4 - 280M/4	3100	400	763	695	535	940	300	1250	1250	500	45	26
SK 14407	315S/4 - 315L/4	3600	400	793	860	565	990	300	1500	1500	500	45	26
	315LA/4 - 315LB/4	3850	400	793	860	565	990	300	1625	1625	500	45	26
	355S/4 - 355M/4	4100	400	793	860	565	990	300	1750	1750	500	45	26
SK 14507	180M/4 - 250M/4	3100	400	793	695	565	990	300	1250	1250	500	45	26
	280S/4 - 280M/4	3350	400	793	695	565	990	300	1375	1375	500	45	26
SK 15407	280S/4 - 315L/4	3600	400	805	860	605	1125	300	1500	1500	500	45	26
	315LA/4 - 315LB/4	3850	400	805	860	605	1125	300	1625	1625	500	45	26
	355S/4 - 355M/4	4100	400	805	860	605	1125	300	1750	1750	500	45	26
SK 15507	225S/4 - 225M/4	3100	400	805	655	605	1125	300	1250	1250	500	45	26
	250M/4 - 315S/4	3350	400	805	695	605	1125	300	1375	1375	500	45	26
	315M/4 - 315LB/4	3600	400	805	860	605	1125	300	1500	1500	500	45	26

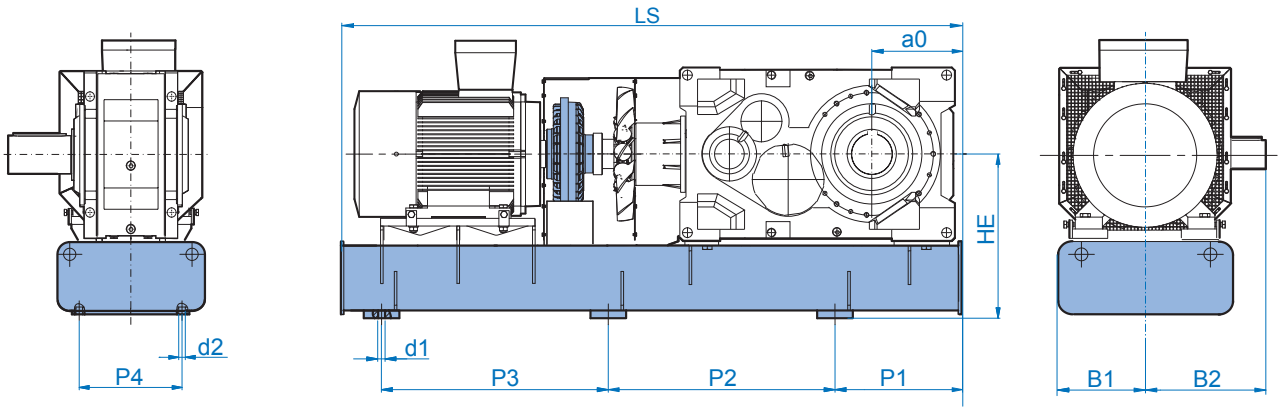

MFT	Motor size	LS	B1	B2	a0	HE	P1	P2	P3	P4	d1	d2
SK 5407 SK 5507	132S/4 - 132M/4	1600	400	403	275	583	250	550	550	290	40	22
	160M/4 - 225M/4	1850	400	403	275	583	250	675	675	290	40	22
	250M/4 - 315M/4	2100	400	403	275	583	250	800	800	290	40	22
	315MA/4 - 315L/4	2350	400	403	275	583	250	925	925	290	40	22
SK 6407 SK 6507	132S/4 - 132S/4	1600	400	403	305	603	250	550	550	290	40	22
	132M/4 - 200L/4	1850	400	403	305	603	250	675	675	290	40	22
	225S/4 - 280M/4	2100	400	403	305	603	250	800	800	290	40	22
	315S/4 - 315L/4	2350	400	403	305	603	250	925	925	290	40	22
SK 7407 SK 7507	132S/4 - 132M/4	1850	400	452	355	620	270	655	655	290	40	22
	160M/4 - 225M/4	2100	400	452	355	620	270	780	780	290	40	22
	250M/4 - 280M/4	2350	400	452	355	620	270	905	905	290	40	22
SK 8407 SK 8507	132S/4 - 132S/4	1850	400	452	385	650	270	655	655	290	40	22
	132M/4 - 200L/4	2100	400	452	385	650	270	780	780	290	40	22
	225S/4 - 315S/4	2350	400	452	385	650	270	905	905	290	40	22
SK 9407 SK 9507	132S/4 - 160M/4	2100	400	557	390	680	270	780	780	350	40	22
	160L/4 - 225M/4	2350	400	557	390	680	270	905	905	350	40	22
	280S/4 - 315L/4	2600	400	557	390	680	270	1030	1030	350	40	22
SK 10407 SK 10507	132S/4 - 132M/4	2100	400	557	425	715	270	780	780	350	40	22
	160M/4 - 225M/4	2350	400	557	425	715	270	905	905	350	40	22
	250M/4 - 315M/4	2600	400	557	425	715	270	1030	1030	350	40	22
SK 11407	315S/4 - 250M/4	2600	400	580	430	740	270	1030	1030	350	45	26
	280S/4 - 315L/4	2850	400	580	430	740	270	1155	1155	350	45	26
	315LA/4 - 315LB/4	3100	400	580	430	740	270	1280	1280	350	45	26
SK 11507	160M/4 - 180L/4	2350	400	580	430	740	270	905	905	350	45	26
	200L/4 - 280M/4	2600	400	580	430	740	270	1030	1030	350	45	26

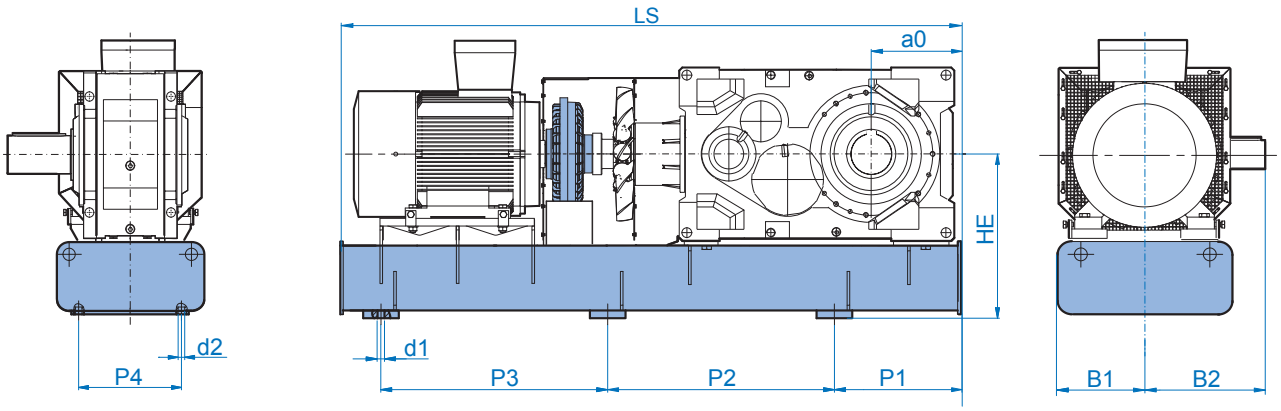

MFT	Motor size	LS	B1	B2	a0	HE	P1	P2	P3	P4	d1	d2
SK 12407	225S/4 - 250M/4	2850	400	665	465	890	270	1155	1155	500	45	26
	280S/4 - 315L/4	3100	400	665	465	890	270	1280	1280	500	45	26
	315LA/4 - 315LB/4	3350	400	665	465	890	270	1405	1405	500	45	26
SK 12507	160M/4 - 225M/4	2600	400	665	465	890	270	1030	1030	500	45	26
	250M/4 - 280M/4	2850	400	665	465	890	270	1155	1155	500	45	26
SK 13407	250M/4 - 280S/4	3100	400	763	535	940	300	1250	1250	500	45	26
	280M/4 - 315L/4	3350	400	763	535	940	300	1375	1375	500	45	26
	315LA/4 - 355M/4	3600	400	763	535	940	300	1500	1500	500	45	26
SK 13507	180M/4 - 225M/4	2850	400	763	535	940	300	1125	1125	500	45	26
	250M/4 - 280M/4	3100	400	763	535	940	300	1250	1250	500	45	26
SK 14407	315S/4 - 315L/4	3600	400	793	565	990	300	1500	1500	500	45	26
	315LA/4 - 315LB/4	3850	400	793	565	990	300	1625	1625	500	45	26
	355S/4 - 355M/4	4100	400	793	565	990	300	1750	1750	500	45	26
SK 14507	180M/4 - 250M/4	3100	400	793	565	990	300	1250	1250	500	45	26
	280S/4 - 280M/4	3350	400	793	565	990	300	1375	1375	500	45	26
SK 15407	280S/4 - 315M/4	3600	400	805	605	1125	300	1500	1500	500	45	26
	315MA/4 - 315LB/4	3850	400	805	605	1125	300	1625	1625	500	45	26
	355S/4 - 355M/4	4100	400	805	605	1125	300	1750	1750	500	45	26
SK 15507	225S/4 - 280M/4	3350	400	805	605	1125	300	1375	1375	500	45	26
	315S/4 - 315L/4	3600	400	805	605	1125	300	1500	1500	500	45	26

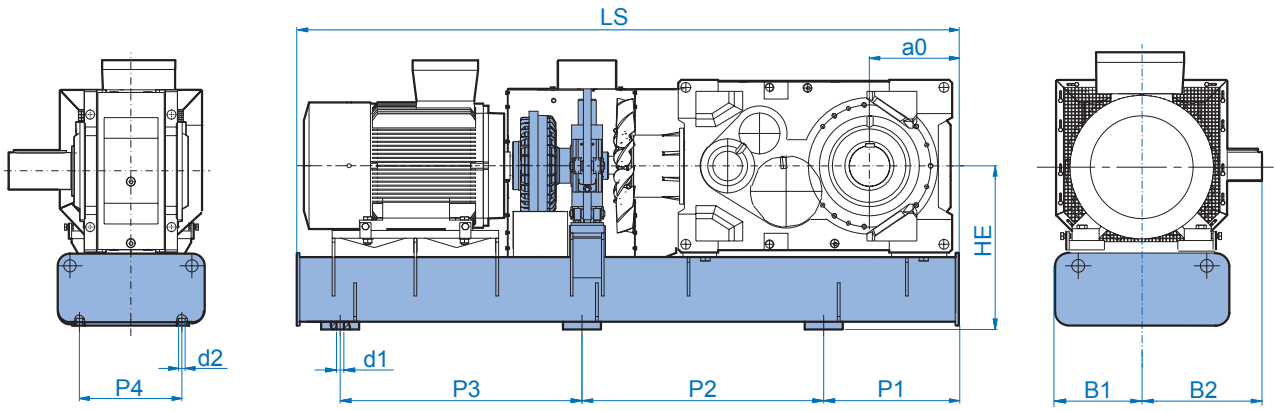

MFTB	Motor size	LS	B1	B2	B3	a0	HE	P1	P2	P3	P4	d1	d2
SK 5407 SK 5507	132S/4 - 132M/4	1600	400	403	500	275	583	250	550	550	290	40	22
	160M/4 - 225M/4	1850	400	403	580	275	583	250	675	675	290	40	22
	250M/4 - 315M/4	2100	400	403	695	275	583	250	800	800	290	40	22
	315MA/4 - 315L/4	2350	400	403	860	275	583	250	925	925	290	40	22
SK 6407 SK 6507	132S/4 - 132S/4	1600	400	403	500	305	603	250	550	550	290	40	22
	132M/4 - 200L/4	1850	400	403	580	305	603	250	675	675	290	40	22
	225S/4 - 280M/4	2100	400	403	695	305	603	250	800	800	290	40	22
	315S/4 - 315L/4	2350	400	403	860	305	603	250	925	925	290	40	22
SK 7407 SK 7507	132S/4 - 132M/4	1850	400	452	500	355	620	270	655	655	290	40	22
	160M/4 - 225M/4	2100	400	452	655	355	620	270	780	780	290	40	22
	250M/4 - 315M/4	2350	400	452	695	355	620	270	905	905	290	40	22
SK 8407 SK 8507	132S/4 - 132S/4	1850	400	452	500	385	650	270	655	655	290	40	22
	132M/4 - 200L/4	2100	400	452	580	385	650	270	780	780	290	40	22
	225S/4 - 280M/4	2350	400	452	695	385	650	270	905	905	290	40	22
SK 9407 SK 9507	132S/4 - 160M/4	2100	400	557	500	390	680	270	780	780	350	40	22
	160L/4 - 250M/4	2350	400	557	695	390	680	270	905	905	350	40	22
	280S/4 - 315L/4	2600	400	557	860	390	680	270	1030	1030	350	40	22
SK 10407 SK 10507	132S/4 - 132M/4	2100	400	557	500	425	715	270	780	780	350	40	22
	160M/4 - 225M/4	2350	400	557	655	425	715	270	905	905	350	40	22
	250M/4 - 315M/4	2600	400	557	695	425	715	270	1030	1030	350	40	22
SK 11407	225S/4 - 250M/4	2600	400	580	695	430	740	270	1030	1030	350	45	26
	280S/4 - 315L/4	2850	400	580	860	430	740	270	1155	1155	350	45	26
	315LA/4 - 315LB/4	3100	400	580	860	430	740	270	1280	1280	350	45	26
SK 11507	160M/4 - 180L/4	2350	400	580	500	430	740	270	905	905	350	45	26
	200L/4 - 280M/4	2600	400	580	695	430	740	270	1030	1030	350	45	26

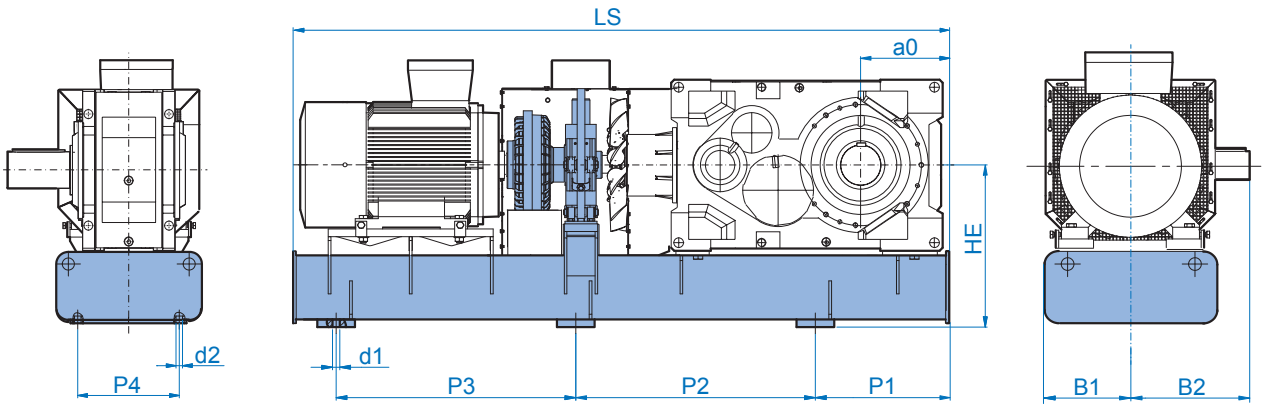

MFTB	Motor size	LS	B1	B2	B3	a0	HE	P1	P2	P3	P4	d1	d2
SK 12407	225S/4 - 250M/4	2850	400	665	695	465	890	270	1155	1155	500	45	26
	280S/4 - 315L/4	3100	400	665	860	465	890	270	1280	1280	500	45	26
	315LA/4 - 315LB/4	3350	400	665	860	465	890	270	1405	1405	500	45	26
SK 12507	160M/4 - 225M/4	2600	400	665	655	465	890	270	1030	1030	500	45	26
	250M/4 - 280M/4	2850	400	665	695	465	890	270	1155	1155	500	45	26
SK 13407	250M/4 - 280S/4	3100	400	763	695	535	940	300	1250	1250	500	45	26
	280M/4 - 315L/4	3350	400	763	860	535	940	300	1375	1375	500	45	26
	315LA/4 - 355M/4	3600	400	763	860	535	940	300	1500	1500	500	45	26
SK 13507	180M/4 - 225M/4	2850	400	763	655	535	940	300	1125	1125	500	45	26
	250M/4 - 280M/4	3100	400	763	695	535	940	300	1250	1250	500	45	26
SK 14407	315S/4 - 315L/4	3600	400	793	860	565	990	300	1500	1500	500	45	26
	315LA/4 - 315LB/4	3850	400	793	860	565	990	300	1625	1625	500	45	26
	355S/4 - 355M/4	4100	400	793	860	565	990	300	1750	1750	500	45	26
SK 14507	180M/4 - 250M/4	3100	400	793	695	565	990	300	1250	1250	500	45	26
	280S/4 - 280M/4	3350	400	793	695	565	990	300	1375	1375	500	45	26
SK 15407	280S/4 - 315M/4	3600	400	805	695	605	1125	300	1500	1500	500	45	26
	315MA/4 - 315LB/4	3850	400	805	860	605	1125	300	1625	1625	500	45	26
	355S/4 - 355M/4	4100	400	805	860	605	1125	300	1750	1750	500	45	26
SK 15507	315S/4 - 315L/4	3600	400	805	860	605	1125	300	1500	1500	500	45	26
	315LA/4 - 315LB/4	3850	400	805	860	605	1125	300	1625	1625	500	45	26



UNICASE™ SPEED REDUCERS



HELICAL IN-LINE
- Foot or Flange Mount
- Torque up to 205.000 lb-in
- Gear ratios - 1,82:1 to over 300.000:1

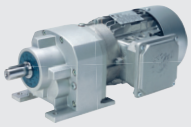

NORDBLOC®.1 HELICAL IN-LINE
- Foot or Flange Mount
- Torque up to 26.550 lb-in
- Gear ratios - 1,88:1 to over 370:1

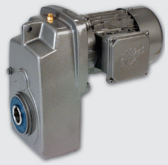

PARALLEL HELICAL CLINCHER™
- Shaft, Flange or Foot Mount
- Torque up to 797.000 lb-in
- Gear ratios - 4,26:1 to over 300.000:1

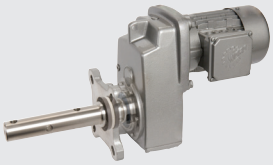

SCP SCREW CONVEYOR PACKAGE
- Shaft, or Flange Mount
- Torque up to 53.100 lb-in
- Gear ratios - 4,32:1 to over 1500:1



RIGHT ANGLE HELICAL-BEVEL 2-STAGE
- Foot, Flange or Shaft Mount
- Torque up to 5.840 lb-in
- Gear ratios - 4,1:1 to 70:1

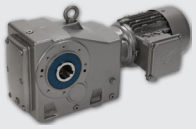

RIGHT ANGLE HELICAL-BEVEL
- Foot, Flange or Shaft Mount
- Torque up to 283.000 lb-in
- Gear ratios - 8,04:1 to over 300.000:1

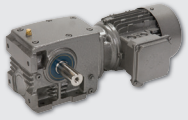

RIGHT ANGLE HELICAL-WORM
- Foot, Flange or Shaft Mount
- Torque up to 27.585 lb-in
- Gear ratios - 4,40:1 to over 300.000:1

HIGH PERFORMANCE MOTORS & BRAKEMOTORS



INVERTER/VECTOR DUTY
- Standard or Energy Efficient
- Integral, NEMA or Metric IEC
- 1/6 to 250 hp

UNICASE™ SPEED REDUCERS



MINICASE™ RIGHT ANGLE WORM
- Foot, Flange or Shaft Mount
- Torque up to 3.540 lb-in
- Gear ratios – 5:1 to 500:1

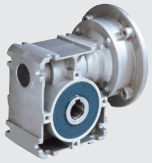

FLEXBLOC™ WORM
- Modular bolt-on options
- Torque up to 4.683 lb-in
- Gear ratios – 5:1 to 3.000:1

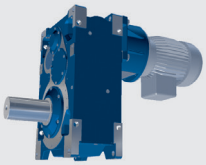

MAXXDRIVE™ LARGE INDUSTRIAL GEAR UNITS PARALLEL HELICAL
- Modular bolt-on options
- Torque up to 2.027.000 lb-in
- Gear ratios – 5:1 to 1.600:1

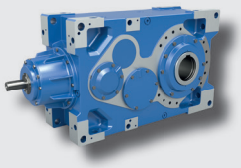

MAXXDRIVE™ LARGE INDUSTRIAL GEAR UNITS HELICAL-BEVEL
- Modular bolt-on options
- Torque up to 2.027.000 lb-in
- Gear ratios – 5:1 to 1.600:1

NORDAC AC VECTOR DRIVES



SK180E FAMILY
- Distributed, simple speed control
- 380-480V, 3-phase to 3,0 hp
- 200-240V, 3-phase to 1,5 hp
- 200-240V, 1-phase to 1,5 hp
- 100-120V, 1-phase to 0,75 hp



SK200E FAMILY
- Distributed, high performance
- 380-480V, 3-phase to 30 hp
- 200-240V, 3-phase to 15 hp
- 200-240V, 1-phase to 1,5 hp
- 100-120V, 1-phase to 1,0 hp



SK500E FAMILY
- Compact, cabinet mount, high performance
- 380-480V, 3-phase, to 125 hp
- 200-240V, 3-phase, to 25 hp
- 200-240V, 1-phase, to 3,0 hp
- 100-120V, 1-phase, to 1,5 hp



Global Vision, Local Support

NORD makes its wide product range easily available through a global network that includes representation in over 60 countries. By providing all of our customers with prompt delivery, and expert support services, we are firmly committed to exceeding customer expectations and being responsive to the ideas and specifications of every customer, anywhere in the world.



NORD DRIVESYSTEMS Group

Headquarters and Technology Center
in Bargteheide, close to Hamburg

Innovative drive solutions
for more than 100 branches of industry

Mechanic products
parallel shaft, helical gear, bevel gear and worm gear units

Electrical products
IE2/IE3/IE4 motors

Electronic Products
centralised and decentralised frequency inverters,
motor starters and field distribution systems

7 state-of-the-art production plants
for all drive components

Subsidiaries and sales partners
in 89 countries on 5 continents
provide local stocks, assembly, production,
technical support and customer service.

More than 3.600 employees throughout the world
create customer oriented solutions

www.nord.com/locator

Headquarters:

Getriebebau NORD GmbH & Co. KG
Getriebebau-Nord-Straße 1
22941 Bargteheide, Germany
Fon +49 (0) 4532 / 289 - 0
Fax +49 (0) 4532 / 289 - 2253
info@nord.com, www.nord.com

Member of the NORD DRIVESYSTEMS Group

NORD
DRIVESYSTEMS

G1050 Mat.-Nr. 6001102 / 4317